GENERAL SUMMARY

ITEM	TOTAL	UNIT	DESCRIPTION	M.P. 151.3	M.P. 152.3	MP 153.9
			GENERAL			
IB.ART.6	LUMP	LUMP SUM	PREMIUM FOR CONTRACT PERFORMANCE BOND AND PAYMENT BOND	LUMP	LUMP	LUMP
SP 614	LUMP	LUMP SUM	MAINTAINING TRAFFIC	LUMP	LUMP	LUMP
SP 619	LUMP	LUMP SUM	FIELD OFFICE	LUMP	LUMP	LUMP
SP 623	LUMP	LUMP SUM	CONSTRUCTION LAYOUT SURVEY	LUMP	LUMP	LUMP
624	LUMP	LUMP SUM	MOBILIZATION	LUMP	LUMP	LUMP
			ROADWAY			
201	LUMP	LUMP SUM	CLEARING AND GRUBBING	LUMP 2	LUMP	LUMP 2
202	639 2	SQ. YD.	PAVEMENT REMOVED 1	361	- 2	278
202	65	SQ. YD.	CONCRETE MEDIAN REMOVED	-	65	-
202	159	FOOT	CURB REMOVED	-	80	79
202	891	FOOT	GUARDRAIL REMOVED	185	408	298
203	5	CU. YD.	EXCAVATION	5	-	-
203	260	CU. YD.	EMBANKMENT	260	-	-
204	1,314	SQ. YD.	SUBGRADE COMPACTION	781	127	406
204	0.48	HOUR	PROOF ROLLING	0.30	0.04	0.14
254	582	SQ. YD.	PAVEMENT PLANING ASPHALT CONCRETE (T=3")	-	582	-
301	48	CU. YD.	ASPHALT CONCRETE BASE, PG 64-22	-	-	48
SP 302	186	CU. YD.	ASPHALT CONCRETE BASE	186	-	-
SP 304	213	CU. YD.	AGGREGATE BASE	129	20	64
407	254	GALLON	NON-TRACKING TACK COAT	116	93	45
441	30	CU. YD.	ASPHALT CONCRETE SURFACE COURSE, TYPE 1, (448), PG64-22	-	20	10
441	50	CU. YD.	ASPHALT CONCRETE INTERMEDIATE COURSE, TYPE 2, (448)	-	36	14
442	30	CU. YD.	ASPHALT CONCRETE SURFACE COURSE, 12.5 MM, TYPE A (446)	30	-	-
442	35	CU. YD.	ASPHALT CONCRETE INTERMEDIATE COURSE, 19 MM, TYPE A (446)	35	-	-
601	89	CU. YD.	ROCK CHANNEL PROTECTION, TYPE B WITH GEOTEXTILE FABRIC	89	-	-
601	140	SQ. YD.	TIED CONCRETE BLOCK MAT WITH TYPE 2 UNDERLAYMENT	-	-	140
SP 605	171	FOOT	6" BASE PIPE UNDERDRAIN WITH GEOTEXTILE FABRIC (18" DEPTH)	171	-	-
606	550	FOOT	GUARDRAIL, TYPE MGS	300	250	-
606	200	FOOT	GUARDRAIL, TYPE MGS WITH LONG POSTS	-	-	200
606	8	EACH	MGS BRIDGE TERMINAL ASSEMBLY, TYPE 1	-	4	4
606	2	EACH	ANCHOR ASSEMBLY, MGS TYPE T	2	-	-
607	40	FOOT	FENCE, TYPE 47, AS PER PLAN	40	-	-
608	240	SQ. FT.	4" CONCRETE WALK	-	-	240
609	80	FOOT	CURB, TYPE 4-C	-	80	-
609	105 2	FOOT	CURB, TYPE 6	-	- 2	105
609	65	SQ. YD.	CONCRETE MEDIAN	-	65	-
611	4	EACH	CATCH BASIN ADJUSTED TO GRADE	-	4	-
SP 614	2	EACH	WORK ZONE IMPACT ATTENUATOR (UNIDIRECTIONAL)	2	-	-
SP 614	4	EACH	WORK ZONE IMPACT ATTENUATOR (BIDIRECTIONAL)	-	4	-
SP 614C	1.25	MILE	REMOVAL OF PAVEMENT MARKINGS	0.86	0.39	-
614	1 2	EACH	SPECIAL - WORK ZONE TRAFFIC SIGNAL	-	1 2	-
615	65	SQ. YD.	PAVEMENT FOR MAINTAINING TRAFFIC, CLASS A	-	65	-
620	16	EACH	REMOVAL OF DELINEATOR	-	16	-
620	16	EACH	DELINEATOR, POST SURFACE MOUNTED	-	16	-
625	6	EACH	CONNECTION, FUSED PULL APART	6	-	-
625	2	EACH	CONNECTION, UNFUSED BOLTED	2	-	-
625	2	EACH	DISCONNECT CIRCUIT	2	-	-
625	150	FOOT	CONDUIT, 2", 725.04	150	-	-
625	150	FOOT	TRENCH	150	-	-
625	786	FOOT	DISTRIBUTION CABLE REMOVED	786	-	-
625	2	EACH	PULL BOX REMOVED AND REPLACED	2	-	-

DESIGN AGENCY
LJB Inc. • 22710 Fairview Center Drive, Suit 200
Fairview Park, OH 44126
(937) 306-0806 tel • (937) 306-0808 fax • LJBInc.com

NO.	REVISIONS	BY	DATE
1	ADDENDUM 2	JLM	2/22
2	ADDENDUM 3	JLM	2/22
-	-	-	-

DESIGNED	CHECKED
JLM	NRP
DRAWN	IN CHARGE
JLM	DWS

GENERAL SUMMARY

M.P. 151.3, 152.3, 153.9

LORAIN AND CUYAHOGA COUNTY

PROJECT 43-22-04

DATE: 3/19/2021

OHIO TURNPIKE AND INFRASTRUCTURE COMMISSION

OHIO TURNPIKE

43-21-05_GG001.dwg; 2/04/22 - 11:30am

GENERAL SUMMARY

ITEM	TOTAL	UNIT	DESCRIPTION	M.P. 151.3	M.P. 152.3	MP 153.9
625	6	EACH	CONNECTION, UNFUSED PERMANENENT	6	-	-
625	786	FOOT	NO. 4 AWG 600 VOLT DISTRIBUTION CABLE	786	-	-
625	2	EACH	PULL BOX, 725.08, 18"	2	-	-
626	22 1	EACH	BARRIER REFLECTOR	6	16 1	-
642	1.21	MILE	EDGE LINE, 4", TYPE 1	0.58	0.50	0.13
642	0.29	MILE	LANE LINE, TYPE 1	0.29	-	-
642	0.07 1	MILE	CENTER LINE, 4", TYPE 1	-	- 1	0.07
642	1.36	MILE	PAVEMENT MARKING MISC. FINAL PAVEMENT MARKING PREPARATION	0.86	0.50	-
659	18	SQ. YD.	REPAIR SEEDING AND MULCHING	18	-	-
659	0.1	TON	COMMERICAL FERTILIZER	0.1	-	-
659	2	M. GAL	WATER	2	-	-
659	370	SQ. YD.	SEEDING AND MULCHING	370	-	-
659	42	CU. YD.	TOPSOIL	42	-	-
659	0.1	ACRE	LIME	0.1	-	-
659	2	EACH	SOIL ANALYSIS TEST	2	-	-
832	5,500	EACH	EROSION CONTROL	2,500	2,000	1,000
			STRUCTURES			
202	414	SQ. YD.	APPROACH SLAB REMOVED	231	102	81
202	LUMP	LUMP SUM	STRUCTURE REMOVED	LUMP	-	-
202	231	SQ. YD.	WEARING COURSE REMOVED	231	-	- 1
SP 202	LUMP	LUMP SUM	PORTIONS OF STRUCTURE REMOVED	-	LUMP	LUMP
503	LUMP	LUMP	COFFERDAMS AND EXCAVATION BRACING	LUMP	-	-
503	LUMP	LUMP	UNCLASSIFIED EXCAVATION	LUMP	-	-
503	24	CU. YD.	ROCK EXCAVATION	24	-	-
509	200	POUND	REINFORCING STEEL, REPLACEMENT OF EXISTING REINFORCING STEEL	-	100	100
SP 509	173,334	POUND	EPOXY COATED REINFORCING STEEL, GRADE 60	17,517	64,336	91,481
510	74	EACH	DOWEL HOLES WITH NON-SHRINK, NON-METALLIC GROUT	-	20	54
511	27	CU. YD.	CLASS QC1 CONCRETE, RETAINING/ WINGWALL NOT INCLUDING FOOTING	27	-	-
511	111	CU. YD	CLASS QC1 CONCRETE, FOOTING	111	-	-
511	11	CU. YD.	CLASS QC1 CONCRETE, HEADWALL	11	-	-
SP 511B	432	CU. YD.	CLASS HP4 CONCRETE, SUPERSTRUCTURE DECK SLAB	-	161	271
SP 511B	108	CU. YD.	CLASS S CONCRETE, BARRIERS AND PARAPETS, USING TYPE 1 CEMENT	-	52	56
SP 511B	74	CU. YD.	CLASS HP4 CONCRETE, ABUTMENT SLABS	-	25	49
SP 511B	8	CU. YD.	CLASS HP4 CONCRETE, FOR PREPLACEMENT TESTING	-	4	4
512	445	SQ. YD.	TYPE 2 WATERPROOFING	445	-	-
513	5,950	EACH	WELDED STUD SHEAR CONNECTORS	-	3,382	2,568
516	83	SQ. FT.	1" PREFORMED EXPANSION JOINT FILLER	69	-	14
SP 516A	50	FOOT	CRACK REPAIR	-	25	25
SP 516B	2,099	FOOT	SEALING OF CONSTRUCTION JOINTS	223	1,008	868
SP 516G	40	EACH	REPLACE EXPANSION BEARING DEVICE	-	20	20
SP 516J	25	EACH	REPLACE FIXED BEARING DEVICE	-	10	15
SP 519	585	SQ. FT.	PATCHING OF CONCRETE STRUCTURES	-	560	25
526	81	SQ. YD.	REINFORCED CONCRETE APPROACH SLABS	-	-	81
526	117	SQ. YD.	REINFORCED CONCRETE APPROACH SLABS, AS PER PLAN	-	117	-
SP 527	LUMP	LUMP SUM	FALSEWORK, TEMPORARY BRACING AND PROTECTIVE STRUCTURES	-	LUMP	LUMP
SP 533	135	FOOT	3" CONTINUOUS STRIP SEAL IN STRUCTURAL STEEL JOINT	-	66	69
SP 533A	135	FOOT	1 ½" COMPRESSION SEAL IN STRUCTURAL STEEL JOINT	-	66	69
SP 536	1,919	SQ.YD.	CONCRETE WEATHERPROOFING, DECK, ABUTMENT SLABS AND APPROACH SLABS	-	807	1,112
SP 536	809	SQ.YD.	CONCRETE WEATHERPROOFING, SUBSTRUCTURE	81	353	375
SP 607	409	FOOT	TYPE I FENCE, ALL ALUMINUM (9'-0" CHAIN LINK WITH SPECIALS)	-	-	409
611	150	FOOT	14'-0" SPAN X 8'-0" RISE CONDUIT, TYPE A, 706.05	150	-	-
613	472	CU. YD.	LOW STRENGTH MORTAR BACKFILL	472	-	-

DESIGN AGENCY
LJB Inc. • 22710 Fairview Center Drive, Suit 200
Fairview Park, OH 44126
(937) 306-5800 tel • (937) 306-5100 fax • LJBInc.com

NO.	REVISIONS	BY	DATE
1	ADDENDUM 3	JLM	2/22
-	-	-	-
-	-	-	-

DESIGNED	CHECKED
JLM	NRP
DRAWN	IN CHARGE
JLM	DWS

GENERAL SUMMARY
M.P. 151.3, 152.3, 153.9
LORAIN AND CUYAHOGA COUNTY

PROJECT 43-22-04
DATE: 3/19/2021

3
55

OHIO TURNPIKE AND INFRASTRUCTURE COMMISSION

43-21-05_GG002.dwg; 2/04/22 - 11:30am

MAINTENANCE OF TRAFFIC NOTES

MAINTAINING TRAFFIC (CONTINUED)

REPLACEMENT SIGN

FLAT SHEET SIGNS FURNISHED BY THE CONTRACTOR IN ACCORDANCE WITH THE REQUIREMENTS OF THE PLANS, SPECIFICATIONS AND PROPOSAL WHICH BECOME DAMAGED BY TRAFFIC FOR REASONS BEYOND THE CONTROL OF THE CONTRACTOR SHALL BE REPLACED IN KIND WHEN ORDERED BY THE CHIEF ENGINEER. REPLACEMENT SIGNS SHALL BE NEW. OTHER MATERIALS MAY BE IN USED, BUT GOOD, CONDITION SUBJECT TO APPROVAL BY THE CHIEF ENGINEER.

PAYMENT FOR THE NEW SIGNS SHALL BE INCLUDED IN THE UNIT BID PRICE FOR ITEM SP 614 MAINTAINING TRAFFIC AND SHALL INCLUDE THE COST OF REMOVING AND DISPOSING OF DAMAGED SIGNS, HARDWARE AND SUPPORTS, AND PROVIDING THE NECESSARY REPLACEMENT HARDWARE, SUPPORTS, ETC..

CONSTRUCTION TRAFFIC

ALL CONSTRUCTION TRAFFIC SHALL USE ACCEPTABLE TRUCK ROUTES TO ACCESS THE CONSTRUCTION AREA. USE OF LOCAL RESIDENTIAL STREETS IS STRICTLY PROHIBITED UNLESS ALLOWED IN WRITING BY THE LOCAL ENFORCEMENT AUTHORITY.

SUSPENSION OF WORK

IF THE CONTRACTOR FAILS TO COMPLY WITH THE PROVISIONS FOR TRAFFIC CONTROL AS SET FORTH IN THESE PLANS OR WITH PROVISIONS OF THE OHIO MANUAL OF UNIFORM TRAFFIC CONTROL DEVICES, THE CHIEF ENGINEER WILL SUSPEND WORK UNTIL THE CONTRACTOR COMPLIES WITH THE NECESSARY REQUIREMENTS.

ITEM 642 -PAVEMENT MARKING MISC: FINAL PAVEMENT MARKING PREPARATION

THIS ITEM SHALL CONSIST OF APPLYING A BASE LAYER OF PAVEMENT MARKING PRIOR TO THE PLACEMENT OF FINAL MARKINGS.

IF FINAL PAVEMENT MARKING WILL BE PLACED WHERE SP 614B PAVEMENT MARKINGS WERE REMOVED BY EITHER SP 614C GRINDING METHOD OR WATER-BLAST METHOD, THEN THE ASPHALT PAVEMENT MUST FIRST BE PREPPED BY APPLYING A BLACK SHADOW MARKING. THE BLACK SHADOW MARKING SHALL CREATE A 1-INCH BORDER AROUND THE FINAL MARKING BEING PLACED.

THE BLACK SHADOW MARKING SHALL BE NON-REFLECTIVE AND PLACED AT THE SAME RATE AS ITEM 642 TYPE 1 MARKINGS.

THE FOLLOWING ESTIMATED QUANTITIES HAVE BEEN CARRIED TO THE GENERAL SUMMARY FOR USE AT LOCATIONS IDENTIFIED BY THE ENGINEER PRIOR TO THE PLACEMENT OF WORK ZONE PAVEMENT MARKINGS.

ITEM 642-PAVEMENT MARKING MISC.: FINAL PAVEMENT MARKING PREPARATION
.86 MILE (MP 151.3) .50 MILE (MP 152.3) 1

MULTI-PLAN, TIME-OF-DAY OPERATION OF WORK ZONE SIGNAL

THE WORK ZONE SIGNAL CONTROL REQUIRED FOR THIS PROJECT AND DETAILED ON THE FOLLOWING SHEETS AND STANDARD CONSTRUCTION DRAWINGS MT-96.11, MT-96.20 AND MT-96.26 SHALL BE CAPABLE OF PROVIDING MULTIPLE TIMING PATTERNS CHOSEN ON A TIME-OF-DAY BASIS.

TRAFFIC CONTROL EQUIPMENT SHALL BE CAPABLE OF TIME-OF-DAY/DAY-OF-WEEK PROGRAMMING; WITH A MINIMUM OF THREE-DIAL, THREE OFFSETS AND THREE SPLITS, OR A MINIMUM OF FIFTEEN SEPARATE TIMING PLANS.

	TIMING PLAN (SECONDS)		
APPROACH	A	B	C
NORTHBOUND GREEN	31	41	16
NORTHBOUND YELLOW	3.5	3.5	3.5
NORTHBOUND ALL RED (INTERNAL CLEARANCE)	18	18	18
SOUTHBOUND GREEN	30	20	15
SOUTHBOUND YELLOW	3.5	3.5	3.5
SOUTHBOUND ALL RED (INTERNAL CLEARANCE)	19	19	19
TOTAL CYCLE LENGTH	105	105	75

TIME OF DAY	SUN	MON	TUE	WED	THUR	FRI	SAT
MIDNIGHT - 7:00 A.M.	C	C	C	C	C	C	C
7:00 A.M. - 9:00 A.M.	C	A	A	A	A	A	A
9:00 A.M. - 4:00 P.M.	A	C	C	C	C	C	A
4:00 P.M. TO 6:00 P.M.	C	B	B	B	B	B	A
6:00 P.M. TO MIDNIGHT	C	C	C	C	C	C	C

THE SIGNAL TIMINGS PROVIDED ABOVE ARE BASED ON EXISTING TRAFFIC COUNTS. THE INTENT OF THE SIGNAL TIMING IS TO BALANCE VEHICLE DELAY IN BOTH DIRECTIONS. THE CONTRACTOR IS RESPONSIBLE FOR ADJUSTING THE PROPOSED TIMINGS IN ORDER TO REDUCE CONGESTION AND BALANCE DELAY.

PAYMENT IS INCIDENTAL TO THE LUMP SUM BID FOR SP 614 MAINTAINING TRAFFIC.

WORK ZONE PAVEMENT MARKINGS

THE WORK ZONE PAVEMENT MARKINGS SHALL BE 4" WIDE, UNLESS NOTED OTHERWISE ON THE PLANS OR ODOT/OTIC STANDARD DRAWING. REMOVAL METHODS LISTED IN SP 614C SHALL ALSO BE USED TO REMOVE ITEM 614 - WORK ZONE PAVEMENT MARKINGS.

SP 614B (TEMPORARY TAPE) SHALL BE USED FOR WORK ZONE MARKINGS ON BRIDGE DECKS WHERE THE WORK ZONE PAVEMENT MARKING IS NOT IN LINE WITH EXISTING/ FINAL MARKINGS.

ALL COSTS FOR THE PLACEMENT OF WORK ZONE PAVEMENT MARKINGS INCLUDING EQUIPMENT, LABOR AND MATERIALS SHALL BE INCLUDED IN THE LUMP SUM BID FOR ITEM 614 - MAINTAINING TRAFFIC.

SP 614C - REMOVAL OF PAVEMENT MARKINGS

ALL PAVEMENT MARKINGS WHICH ARE IN CONFLICT WITH THE PROPOSED MAINTENANCE OF TRAFFIC PAVEMENT MARKINGS ARE TO BE REMOVED AS PER SP 614C - REMOVAL OF PAVEMENT MARKINGS. REMOVAL OF EXISTING CONFLICTING PAVEMENT MARKINGS SHALL BE ACCOMPLISHED BY EITHER GRINDING OR WATER BLAST AS APPROVED BY THE CHEIF ENGINEER, IN ACCORDANCE WITH SP 614C.

BLACKOUT TAPE CAN BE USED PER SP 614A AND CMS 614.

MEASUREMENT OF THIS ITEM SHALL BE IN ACCORDANCE WITH SP 614C AND SHALL INCLUDE ALL LABOR, MATERIALS, EQUIPMENT AND INCIDENTALS NECESSARY TO REMOVE CONFLICTING PAVEMENT MARKINGS TO THE SATISFACTION OF THE CHIEF ENGINEER.

THE FOLLOWING QUANTITY HAS BEEN CARRIED TO THE MAINTENANCE OF TRAFFIC GENERAL SUMMARY TO BE UTILIZED AS DIRECTED BY THE CHIEF ENGINEER.

SP 614C - REMOVAL OF PAVMENT MARKING .86 MILE (MP 151.3) .39 MILE (MP 152.3)

OLMSTED TOWNSHIP GENERAL NOTES FOR M.P. 153.9 STRUCTURE

1. ALL CONTRACTORS AND SUBCONTRACTORS MUST BE LICENSED WITH THE OLMSTED TOWNSHIP BUILDING DEPARTMENT.
2. EROSION CONTROL MEASURES INCLUDING SEDIMENT CONTROL MEASURES AND CONCRETE WASHOUT PITS MUST BE INSTALLED AND MAINTAINED THROUGHOUT THE PROJECT DURATION.
3. STAGING AREA(S) OR MATERIAL STORAGE AREAS ARE TO BE IDENTIFIED AND APPROPRIATELY STABILIZED PRIOR TO LAND DISTURBANCE.
4. ALL LABOR, MATERIALS, EQUIPMENT AND INCIDENTALS NECESSARY TO COMPLETE THIS WORK SHALL BE CONSIDERED INCIDENTAL TO THE PROJECT AND NO ADDITIONAL COMPENSATION SHALL BE GRANTED.

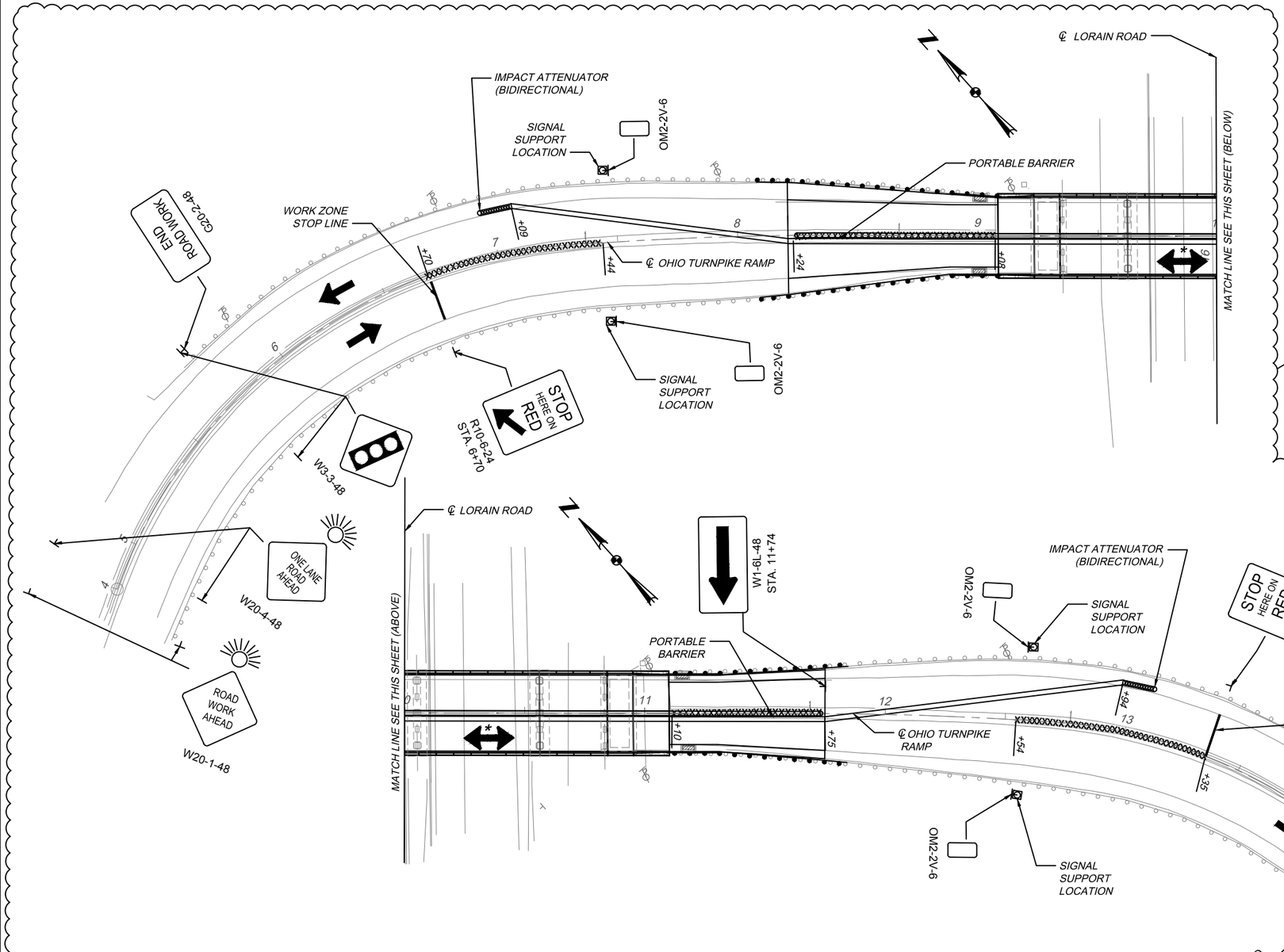

LEGEND

xxxxxx REMOVE CONCRETE MEDIAN WHERE SHOWN ON THIS SHEET. REPLACE WITH PAVEMENT FOR MAINTAINING TRAFFIC, CLASS A. REMOVE TEMPORARY PAVEMENT AND RECONSTRUCT CONCRETE MEDIAN WHEN CONSTRUCTION IS COMPLETE. (1)

DIRECTION OF TRAFFIC

* FOR CONSTRUCTION PHASING, SEE SHEETS 29 AND 30.

FOR INFORMATION NOT SHOWN, SEE ODOT STANDARD CONSTRUCTION DRAWINGS MT-96.11, MT-96.20, AND MT-96.26.

NOTES:

1. ALL TRAFFIC CONTROL DEVICES SHALL CONFORM TO THE CURRENT EDITION OF THE "OHIO MANUAL OF UNIFORM TRAFFIC CONTROL DEVICES".
2. THE CONTRACTOR SHALL FURNISH, ERECT, MAINTAIN AND SUBSEQUENTLY REMOVE ALL BARRICADES, SIGNS, SIGN SUPPORTS AND INCIDENTALS AS SHOWN ON THIS SHEET.
3. PAYMENT FOR ALL LABOR, EQUIPMENT AND MATERIALS SHALL BE CONSIDERED INCIDENTAL TO SP 614 MAINTAINING TRAFFIC UNLESS ITEMIZED SEPARATELY.
4. THE CONTRACTOR SHALL COVER OR REMOVE EXISTING CONFLICTING SIGNING AND/ OR PAVEMENT MARKING PRIOR TO CONSTRUCTION. CONFLICTING PAVEMENT MARKINGS SHALL BE REMOVED UNLESS COVERED WITH NEW PAINTED LINES.
5. TRAFFIC BACKUPS ONTO THE OHIO TURNPIKE MAINLINE OR INTO TOLL PLAZAS, AS DETERMINED BY THE CHIEF ENGINEER, WILL NOT BE ALLOWED. AT THE DIRECTION OF THE CHIEF ENGINEER THE CONTRACTOR SHALL PROVIDE FLAGGERS TO MANUALLY OPERATE OR OVERRIDE THE TEMPORARY TRAFFIC SIGNALS TO ALLEVIATE TRAFFIC BACKUPS. THE COST OF PROVIDING FLAGGERS, AT THE DIRECTION OF THE CHIEF ENGINEER, IS INCLUDED UNDER THE LUMP SUM FOR SP 614 MAINTAINING TRAFFIC.

DESIGN AGENCY
L.ADI Inc. • 2270 Fairview Center Drive, Suit 200
Fairview Park, OH 44126
(937) 306-5800 ★ (937) 306-5100 fax ★ L.ADIInc.com

NO.	REVISIONS	BY	DATE
1	ADDENDUM 3	JLM	2/22
-	-	-	-
-	-	-	-

DESIGNED	CHECKED
CEL	JLM
DRAWN	IN CHARGE
CEL	DWS

MAINTENANCE OF TRAFFIC PLAN
OHIO TURNPIKE RAMP OVER LORAIN ROAD : PHASE 1
LORAIN COUNTY
M.P. 152.3

PROJECT 43-22-04
DATE: 3/19/2021

OHIO TURNPIKE AND INFRASTRUCTURE COMMISSION

Q:\Ohio Turnpike Comm\0116926A.00 - Bridge Deck Replmts 71-19-03\000000\Design\MOT\Sheets\43-21-05_LORAIN MP001.dwg; MP002; 2/04/22 - 11:31am

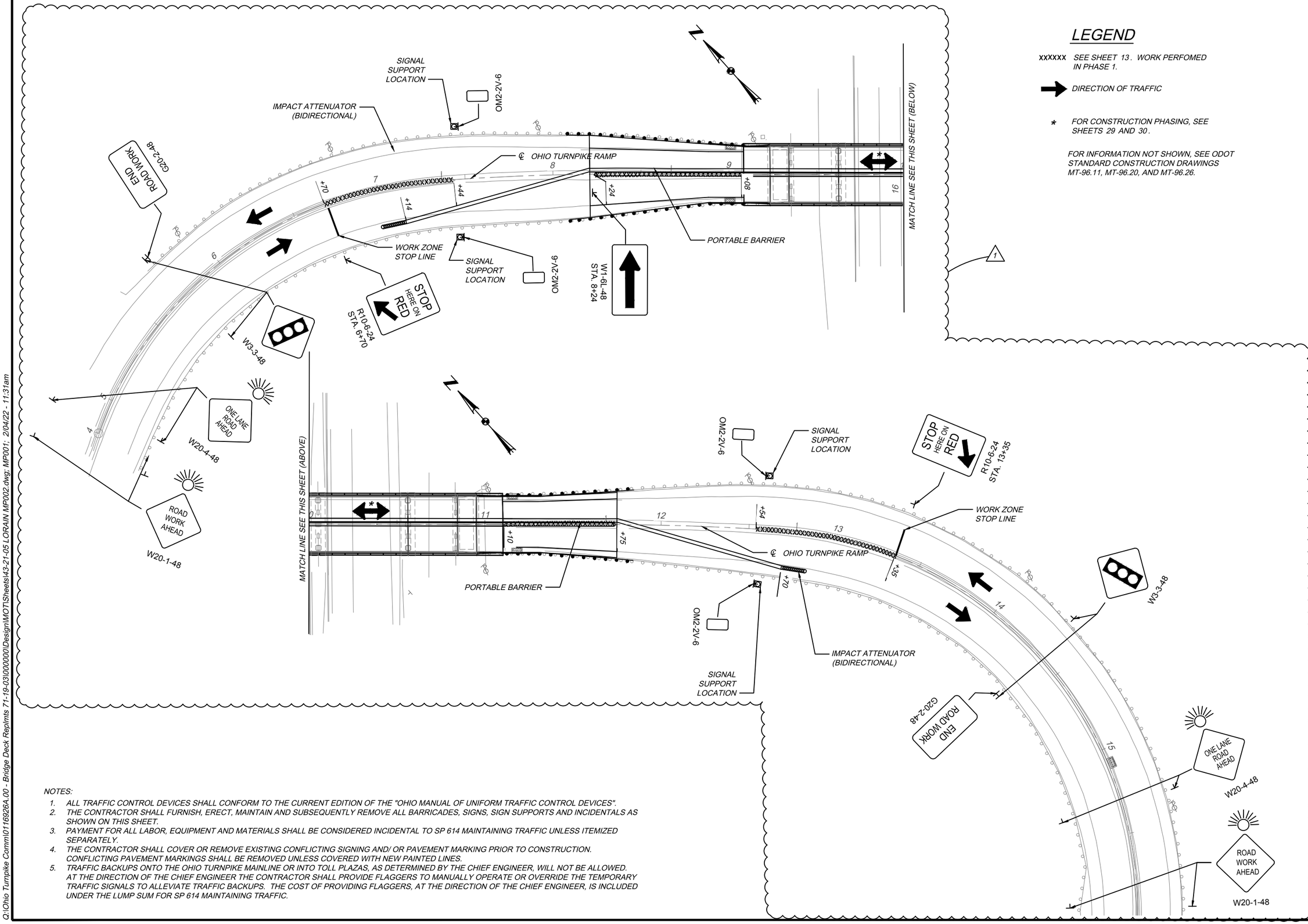

LEGEND

xxxxxx SEE SHEET 13. WORK PERFOMED IN PHASE 1.

DIRECTION OF TRAFFIC

* FOR CONSTRUCTION PHASING, SEE SHEETS 29 AND 30.

FOR INFORMATION NOT SHOWN, SEE ODOT STANDARD CONSTRUCTION DRAWINGS MT-96.11, MT-96.20, AND MT-96.26.

NOTES:

1. ALL TRAFFIC CONTROL DEVICES SHALL CONFORM TO THE CURRENT EDITION OF THE "OHIO MANUAL OF UNIFORM TRAFFIC CONTROL DEVICES".
2. THE CONTRACTOR SHALL FURNISH, ERECT, MAINTAIN AND SUBSEQUENTLY REMOVE ALL BARRICADES, SIGNS, SIGN SUPPORTS AND INCIDENTALS AS SHOWN ON THIS SHEET.
3. PAYMENT FOR ALL LABOR, EQUIPMENT AND MATERIALS SHALL BE CONSIDERED INCIDENTAL TO SP 614 MAINTAINING TRAFFIC UNLESS ITEMIZED SEPARATELY.
4. THE CONTRACTOR SHALL COVER OR REMOVE EXISTING CONFLICTING SIGNING AND/ OR PAVEMENT MARKING PRIOR TO CONSTRUCTION. CONFLICTING PAVEMENT MARKINGS SHALL BE REMOVED UNLESS COVERED WITH NEW PAINTED LINES.
5. TRAFFIC BACKUPS ONTO THE OHIO TURNPIKE MAINLINE OR INTO TOLL PLAZAS, AS DETERMINED BY THE CHIEF ENGINEER, WILL NOT BE ALLOWED. AT THE DIRECTION OF THE CHIEF ENGINEER THE CONTRACTOR SHALL PROVIDE FLAGGERS TO MANUALLY OPERATE OR OVERRIDE THE TEMPORARY TRAFFIC SIGNALS TO ALLEVIATE TRAFFIC BACKUPS. THE COST OF PROVIDING FLAGGERS, AT THE DIRECTION OF THE CHIEF ENGINEER, IS INCLUDED UNDER THE LUMP SUM FOR SP 614 MAINTAINING TRAFFIC.

DESIGN AGENCY
LJB Inc. • 22710 Fairview Center Drive, Suite 200
Fairview Park, OH 44126
(937) 299-5600 tel • (937) 299-5700 fax • LJBInc.com

NO.	REVISIONS	BY	DATE
1	ADDENDUM 3	JLM	2/22
-	-	-	-
-	-	-	-

DESIGNED	CHECKED
CEL	JLM
DRAWN	IN CHARGE
CEL	DWS

MAINTENANCE OF TRAFFIC PLAN
OHIO TURNPIKE RAMP OVER LORAIN ROAD : PHASE 2
LORAIN COUNTY
M.P. 152.3

PROJECT 43-22-04
DATE: 3/19/2021

OHIO TURNPIKE AND INFRASTRUCTURE COMMISSION

Q:\Ohio Turnpike Comm\0116926A.00 - Bridge Deck Replmts 71-19-03\000000\Design\MOT\Sheets\43-21-05 LORAIN MP002.dwg; MP001; 2/04/22 - 11:31am

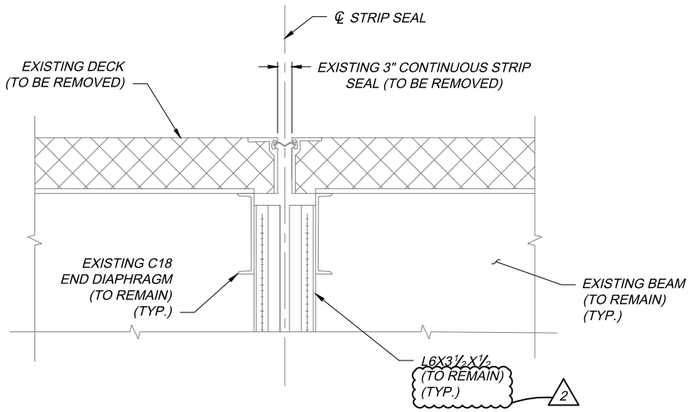

PIER 1 AND PIER 3 SECTION

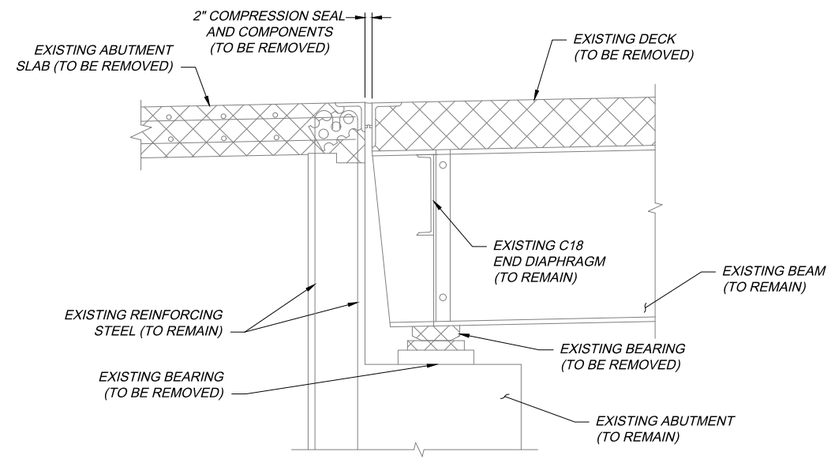

ABUTMENT SECTION

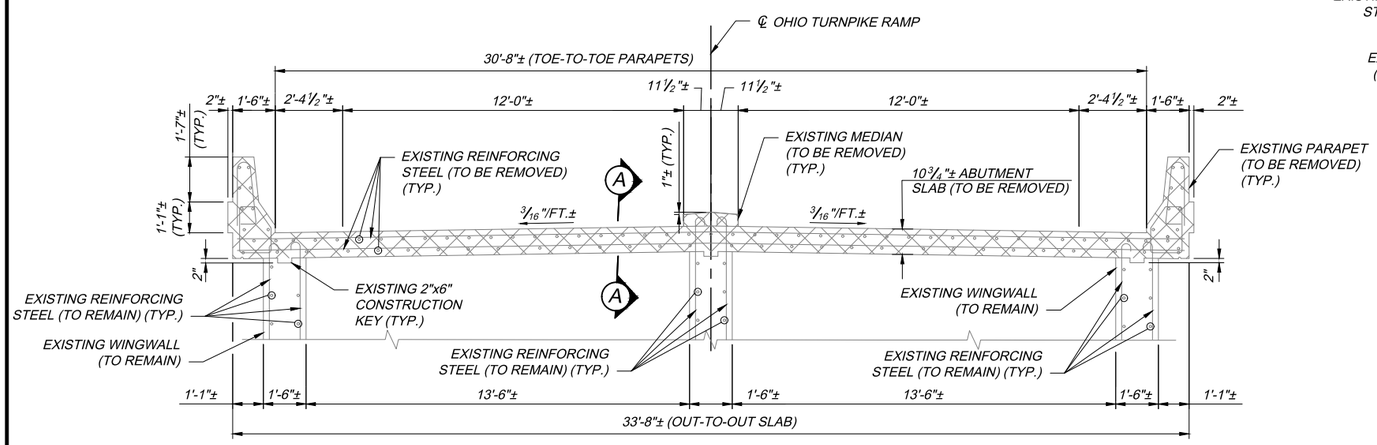

EXISTING ABUTMENT SLAB SECTION

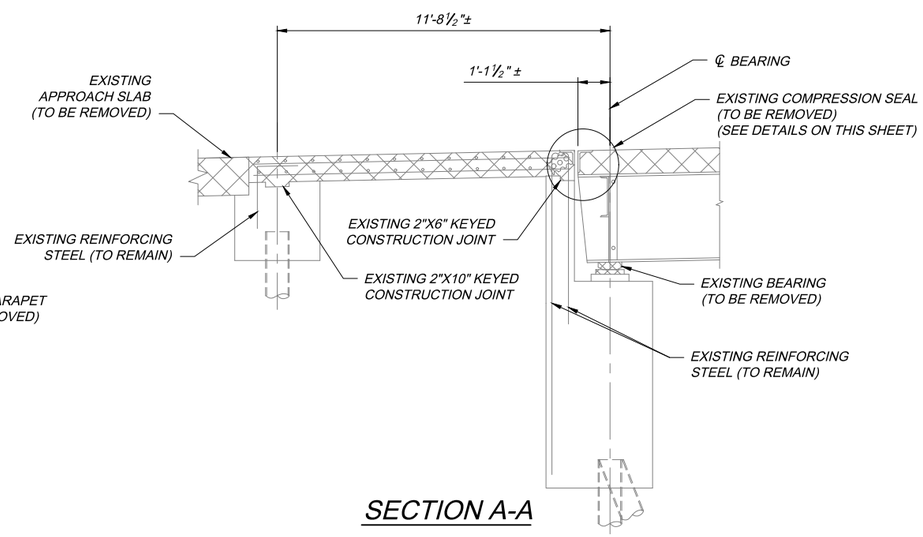

SECTION A-A

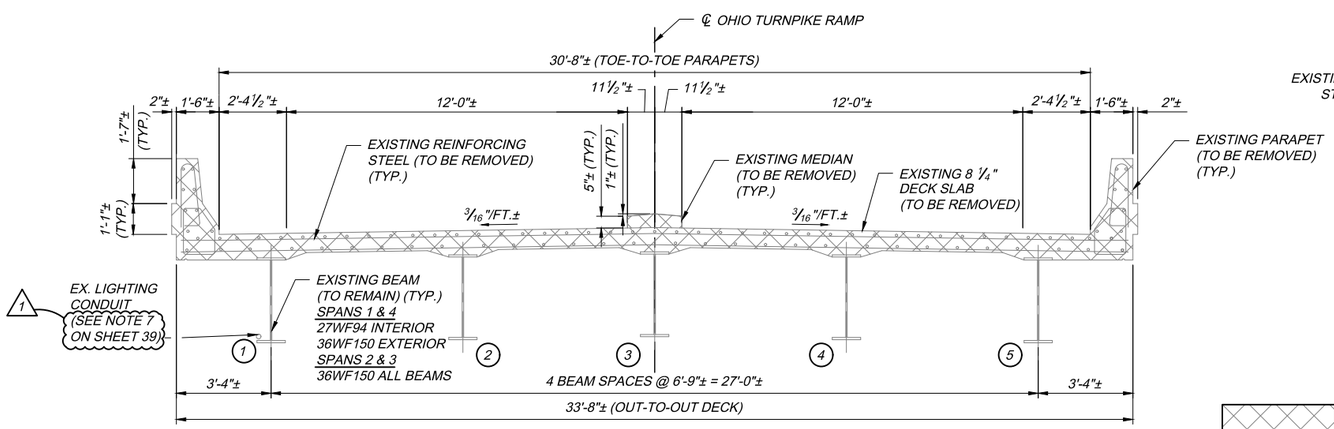

EXISTING TRANSVERSE SECTION

- DENOTES PORTIONS OF STRUCTURE TO BE REMOVED AS PER ITEM SP 202

DESIGN AGENCY
LJB Inc. • 22710 Fairview Center Drive, Suite 200
Fairview Park, OH 44126
(937) 299-5600 ext 4 (937) 299-5700 fax • LJBInc.com

NO.	REVISIONS	BY	DATE
1	ADDENDUM 1	JLM	1/22
2	ADDENDUM 3	JLM	2/22
-	-	-	-

DESIGNED	CHECKED
JLM	NRP
DRAWN	IN CHARGE
JLM	DWS

REMOVAL DETAILS
OHIO TURNPIKE RAMP OVER LORAIN ROAD
LORAIN COUNTY
M.P. 152.3

PROJECT 43-22-04
DATE: 3/19/2021

OHIO TURNPIKE AND INFRASTRUCTURE COMMISSION

MP 1523_Lorain_SV001.dwg; 2/04/22 - 11:31am