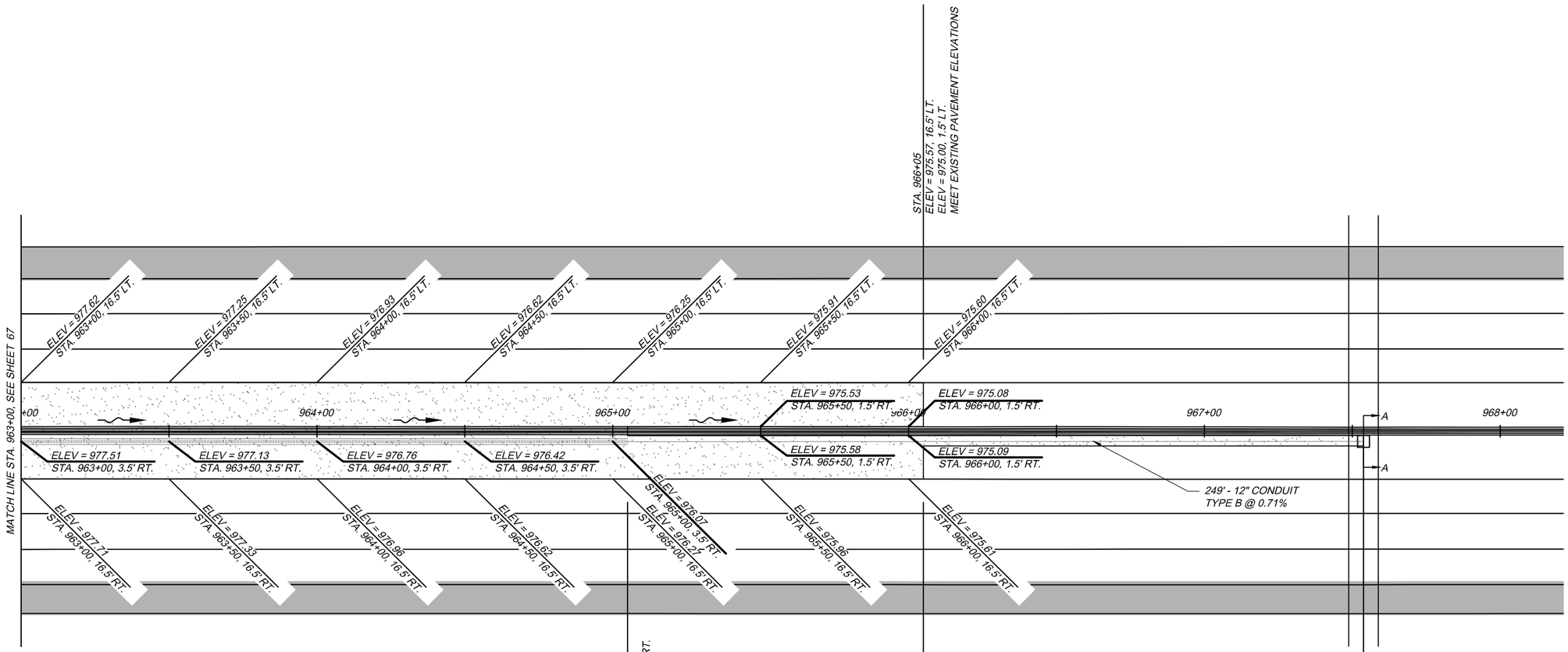

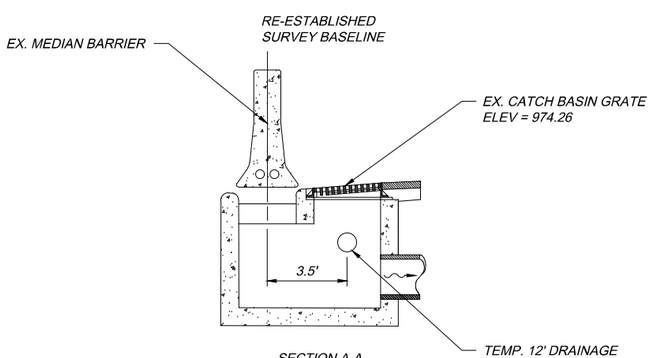

SECTION A-A
TEMPORARY 12" DRAINAGE
CONDUIT TIE-IN DETAIL
STA. 967+54

NOTES:

1. THE INTENTION OF THE LISTED ELEVATIONS IS TO IDENTIFY THE EXISTING EDGE LINE ELEVATIONS AND THE REQUIRED VARIABLE DEPTH TEMPORARY PAVEMENT PLACEMENT REQUIRED TO PROMOTE DRIVER SAFETY THROUGH THE WORK ZONE AND PROVIDE POSITIVE ROADWAY DRAINAGE.
2. PAVEMENT ELEVATIONS AND DRAINAGE INVERTS SHOWN HERE ARE DESIGNED USING ELEVATIONS OBTAINED IN A RECENT SURVEY OF EXISTING CONDITIONS. AS A RESULT, DIFFERENCES MAY OCCUR FROM THOSE ELEVATIONS SHOWN IN PARTS OF THESE PLANS WHICH ARE BASED ON EXISTING THIRD LANE DESIGN PLANS.
3. ALL ELEVATIONS ARE TO BE CONSIDERED AS RELEVANT TO THE EXISTING CONDITIONS AND SHALL BE VERIFIED FOR ACCURACY AND POSITIVE DRAINAGE BY THE CONTRACTOR PRIOR TO BEGINNING MEDIAN BARRIER WALL REMOVAL AND CROSSOVER CONSTRUCTION ACTIVITIES.
4. THE TEMPORARY SLOTTED DRAIN SHALL BE AS PER ODOT STANDARD CONSTRUCTION DRAWING DM-1.3, TYPE 2. THE CONSTRUCTION SHALL BULKHEAD AND SEAL THE WESTERN END OF THE SLOTTED DRAIN PIPE. PAYMENT FOR INSTALLATION OF THE SLOTTED DRAIN SHALL BE INCLUDED IN ITEM 611 - INSTALLATION AND REMOVAL OF 12" SLOT DRAIN, TYPE 2, AS PER PLAN. (1) (2)
5. THE TEMPORARY ELEVATIONS INDICATED AT 3.5' RT. ARE THE PROPOSED SLOTTED DRAIN GRATE ELEVATIONS.

LEGEND

~~→	DRAINAGE FLOW ARROW
ELEV = XXX.XX / STA. XXX+XX	EXISTING ELEVATION INFORMATION
ELEV = XXX.XX / STA. XXX+XX	PROPOSED ELEVATION INFORMATION
	TEMPORARY PAVEMENT (VARIABLE DEPTH OVERLAY)
	RECONSTRUCTED SHOULDER FOR MAINTAINING TRAFFIC

NO.	REVISIONS	BY	DATE
1	REVISED PAY ITEM	AKF	5/31/24
2	REVISED NOTES, PAY ITEM	TJW	6/14/24
-	-	-	-

DESIGNED	CHECKED
JAH	AKF
DRAWN	IN CHARGE
DLS	MRG

DESIGN AGENCY
GPD GROUP®
Gates Pike Dowling & Associates, Inc.
P: 216.518.5544 F: 216.518.5545
5500 Transportation Boulevard, Suite 100 Cleveland, Ohio 44125
Chrysler Building, 1 Ste. Scholarship Square, Ste. 1

MAINTENANCE OF TRAFFIC
TEMPORARY PAVEMENT DETAILS - CROSSOVER #2 & #4
M.P. 203.9 TO M.P. 204.0
PORTAGE COUNTY

PROJECT 43-24-09
DATE: 03/26/24

OHIO TURNPIKE AND INFRASTRUCTURE COMMISSION

2022348MP121.dwg; 6/21/24 - 8:59am
O:\2022\2022348\Design\MOT\Sheets\2022348MP121.dwg; MOT GEOMETRIC PHASE 2 (4); 6/21/24 - 8:59am