SHEET NUMBER	SHEET NAME	NUMBER OVERALL
01 GENERAL		
G000	TITLE SHEET	1
G001	DRAWINGS LIST	2
G002	CODE SUMMARY	3
G003	LEVEL 1 - LIFE SAFETY	4
G004	LEVEL 2 - LIFE SAFETY	5
G005	ABBREVIATIONS & MATERIALS	6
G006	SYMBOLS & ANNOTATIONS	7
G007	COORDINATION DRAWING	8
G008	COORDINATION DRAWING	9
G009	COORDINATION DRAWING	10
G010	COORDINATION DRAWING	11
G011	COORDINATION DRAWING	12
02 CIVIL		
C101	GENERAL NOTES	13
C102	GENERAL NOTES	14
C103	SITE PLAN - EXISTING CONDITIONS	15
C104	SITE DIMENSION PLAN - NORTH SITE	16
C105	SITE DIMENSION PLAN - SOUTH SITE	17
C106	SITE UTILITY PLAN – NORTH SITE	18
C107	SITE UTILITY PLAN – SOUTH SITE	19
C108	SITE GRADING PLAN - NORTH SITE	20
C109	SITE GRADING PLAN - SOUTH SITE	21
C110	STORM SEWER PROFILES	22
C111	SITE JOINTING PLAN – NORTH SITE	23
C112	SITE JOINTING PLAN – SOUTH SITE	24
C113	TYPICAL SECTIONS – TOLL PLAZA NORTH SITE	25
C114	TYPICAL SECTIONS – TOLL PLAZA SOUTH SITE	26
C115	TOLL ISLANDS DETAILS – NORTH SITE	27
C116	TOLL ISLANDS DETAILS – SOUTH SITE	28
C117	TOLL ISLANDS DETAILS	29
C118	LED TRUSS ELEVATION DETAIL	30
C119	MISSELLANEOUS SITE DETAILS	31
C120	SWPPP – NORTH SITE	32
C121	SWPPP – SOUTH SITE	33
03 STRUCTURAL		
S001	GENERAL NOTES	34
S002	GENERAL NOTES	35
S003	ABBREVIATIONS AND LOADING DIAGRAMS	36
S004	SPECIAL INSPECTIONS	37
S005	SPECIAL INSPECTIONS	38
S100	FIRST FLOOR FOUNDATION AND FRAMING PLAN	39
S101	SECOND FLOOR FRAMING PLAN	40
S102	ROOF FRAMING PLAN	41
S103	CANOPY FOUNDATION PLANS	42
S104	CANOPY FRAMING PLANS	43
S501	UTILITY BUILDING STRUCTURAL DETAILS	44
S502	UTILITY BUILDING STRUCTURAL DETAILS	45
S503	CANOPY STRUCTURAL DETAILS	46
S504	CANOPY STRUCTURAL DETAILS	47
S505	SIGN SUPPORT DETAILS	48
S506	SIGN SUPPORT DETAILS	49
S507	UTILITY BUILDING STRUCTURAL DETAILS	50
S508	CANOPY SECTIONS AND DETAILS	51
04 BRIDGE		
B100	PEDESTRIAN BRIDGE SITE - WESTBOUND	52
B101	PEDESTRIAN BRIDGE SITE PLAN - EASTBOUND	53
B102	PEDESTRIAN BRIDGE GENERAL NOTES	54
B103	PEDESTRIAN BRIDGE GENERAL NOTES	55
B104	PEDESTRIAN BRIDGE FOUNDATION PLAN	56
B105	PEDESTRIAN BRIDGE END TOWER FRAME DETAILS	57
B106	PEDESTRIAN BRIDGE PIER DETAILS	58
B107	PEDESTRIAN BRIDGE DECK PLAN & SECTION	59
B108	PEDESTRIAN BRIDGE BEARING DETAILS	60
B109	PEDESTRIAN BRIDGE REINFORCING STEEL LIST	61
05 ARCHITECTURAL		
A100	AXON VIEW	62
A101	AXON VIEW	63
A102	OVERALL FIRST FLOOR PLAN	64
A103	OVERALL SECOND FLOOR PLAN	65
A104	FIRST FLOOR PLAN	66
A105	SECOND FLOOR PLAN	67
A106	OVERALL REFLECTED CEILING PLAN FIRST FLOOR PLAN	68
A107	OVERALL REFLECTED CEILING PLAN SECOND FLOOR PLAN	69
A108	REFLECTED CEILING PLANS FIRST FLOOR PLAN	70
A109	REFLECTED CEILING PLANS SECOND FLOOR PLANS	71
A110	OVERALL ROOF PLAN	72

SHEET NUMBER	SHEET NAME	NUMBER OVERALL
A111	ROOF PLANS	73
A112	WESTBOUND CANOPY PLANS	74
A113	EASTBOUND CANOPY PLANS	75
A201	OVERALL BUILDING ELEVATIONS	76
A202	ELEVATION MAIN BUILDING	77
A203	ELEVATION SECONDARY BUILDING	78
A204	PEDESTRIAN BRIDGE ELEVATIONS & DETAILS	79
A205	CANOPY ELEVATIONS	80
A301	BUILDING SECTIONS	81
A302	WALL SECTIONS	82
A303	WALL SECTIONS	83
A304	WALL SECTIONS	84
A305	WALL SECTIONS	85
A306	ROOF SECTIONS & DETAILS	86
A307	CANOPY SECTIONS	87
A401	ENLARGED TOILET PLAN ELEVATIONS MAIN BUILDING	88
A402	ELEVATOR PLAN AND SECTIONS	89
A403	STAIRS PLAN AND SECTION	90
A404	STAIR PLANS AND SECTIONS	91
A405	TOLL BOOTH PLAN AND ELEVATIONS	92
A406	TOLL BOOTH SECTIONS	93
A407	TOLL BOOTH SECTIONS & DETAILS	94
A408	TOLL BOOTH DETAILS	95
A409	TOLL BOOTH DETAILS	96
A410	TOLL BOOTH GATE DETAILS - FOR INFORMATION ONLY	97
A501	EXTERIOR DETAILS	98
A502	EXTERIOR DETAILS	99
A503	BRIDGE CONNECTION DETAILS	100
A504	EXTERIOR DETAILS	101
A505	INTERIOR DETAILS	102
A506	CASEWORK ELEVATIONS & DETAILS	103
A601	DOOR SCHEDULE	104
A602	DOOR DETAILS	105
A603	DOOR DETAILS	106
A604	STOREFRONT & WINDOW LEGEND	107
A605	FINISH SCHEDULE	108
A701	FURNITURE & FINISH PLAN	109
A702	INTERIOR ELEVATIONS	110
A703	INTERIOR ELEVATIONS	111
A704	INTERIOR ELEVATIONS	112
A801	WALL TYPES AND DETAILS	113
A802	WALL TYPES AND DETAILS	114
06 PLUMBING		
P001	PLUMBING LEGENDS AND ABBREVIATIONS	115
P101	OVERALL FIRST FLOOR BELOW GRADE PLUMBING PLAN	116
P102	OVERALL FIRST FLOOR ABOVE GRADE PLUMBING PLAN	117
P103	OVERALL SECOND FLOOR PLUMBING PLAN	118
P104	ROOF PLUMBING PLAN	119
P201	FIRST FLOOR BELOW GRADE ENLARGED PLUMBING PLAN	120
P202	FIRST FLOOR ABOVE GRADE ENLARGED PLUMBING PLAN	121
P203	MAIN BUILDING – LOWER ROOF – PLUMBING PLAN	122
P204	SECOND FLOOR ENLARGED PLUMBING PLAN	123
P205	CANOPY PLUMBING PLAN WESTBOUND	124
P206	CANOPY PLUMBING PLAN EASTBOUND	125
P207	PEDESTRIAN BRIDGE PLUMBING PLAN	126
P208	MAIN UTILITY BUILDING ABOVE GRADE RESTROOM AND JC ENLARGED PLUMBING	127
P301	PLUMBING SCHEDULES	128
P401	PLUMBING DETAILS	129
P402	PLUMBING DETAILS	130
P403	PLUMBING DETAILS	131
P501	PLUMBING RISER DIAGRAMS - DOMESTIC WATER	132
P502	PLUMBING RISER DIAGRAM - SANITARY AND VENT	133
P503	PLUMBING RISER DIAGRAM - STORM WATER PEDESTRIAN BRIDGE	134
P504	PLUMBING RISER DIAGRAM - STORM WATER TOLL BOOTH	135
07 MECHANICAL		
M001	MECHANICAL LEGENDS AND ABBREVIATIONS	136
M101	OVERALL FIRST FLOOR HVAC PLAN	137
M102	OVERALL SECOND FLOOR HVAC PLAN	138
M103	OVERALL ROOF PLAN	139
M104	FIRST FLOOR HVAC PLAN	140
M105	SECOND FLOOR HVAC PLAN	141
M106	HVAC LOWER ROOF PLAN	142
M107	HVAC HIGHER ROOF PLAN	143
M108	TOLL BOOTH HVAC PLAN	144
M109	GENERATOR ROOM ENLARGED HVAC PLAN	145
M110	MECHANICAL SCHEDULE 1	146
M111	MECHANICAL SCHEDULE 2	147
M112	MECHANICAL DETAILS	148
M113	MECHANICAL DETAILS	149
M114	SEQUENCE OF OPERATIONS	150

SHEET NUMBER	SHEET NAME	NUMBER OVERALL
08 ELECTRICAL		
E101	ELECTRICAL LEGEND	151
E102	ELECTRICAL SITE PLAN - NORTH	152
E103	ELECTRICAL SITE PLAN - SOUTH	153
E104	POWER PLAN - 1ST FLOOR	154
E105	NORTH MAIN BUILDING SECOND FLOOR - POWER PLAN	155
E106	SOUTH SECONDARY UTILITY BUILDING SECOND FLOOR - POWER PLAN	156
E107	LIGHTING 1ST FLOOR MAIN & SECONDARY	157
E108	MAIN UTILITY BUILDING SECOND FLOOR LIGHTING PLAN	158
E109	SECONDARY UTILITY BUILDING SECOND FLOOR LIGHTING PLAN	159
E110	CANOPY LIGHTING PLAN	160
E111	TOLLBOOTH	161
E112	FIRE ALARM FIRST FLOOR	162
E113	FIRE ALARM SECOND FLOOR	163
E114	LIGHTNING PROTECTION ROOF PLAN	164
E115	LIGHTNING PROTECTION DETAILS	165
E116	POWER RISER DIAGRAM	166
E117	GROUNDING DETAIL	167
E118	PANEL SCHEDULE MDP	168
E119	PANEL SCHEDULE LP	169
E120	PANEL SCHEDULE PP1	170
E121	PANEL SCHEDULE RP1	171
E122	PANEL SCHEDULE CP1	172
E123	PANEL SCHEDULE SBP	173
E124	TYPICAL PANEL SCHEDULE BOOTH	174
E125	PANEL SCHEDULE PB-M1	175
E126	LIGHT FIXTURE SCHEDULE	176
E127	ELECTRICAL DUCT SECTIONS (1 OF 3)	177
E128	ELECTRICAL DUCT SECTIONS (2 OF 3)	178
E129	ELECTRICAL DUCT SECTIONS (3 OF 3)	179
E130	GATE DETAIL	180
E131	GATE DETAIL	181
09 ITS		
I101	ITS LEGEND, ABBREIVIATIONS, AND NOTES	182
I102	ITS OVERALL SITE PLAN	183
I103	ITS OVERALL SITE PLAN	184
I104	ITS UTILITY BUILDING FIRST FLOOR PLAN	185
I105	ITS UTILITY BUILDING SECOND FLOOR PLAN	186
I106	ITS GATES CONNECTIVITY DETAILS	187
I107	EACS ONE-LINE DIAGRAM AND SCHEDULE	188
I108	CCTV ONE-LINE DIAGRAM AND SCHEDULE	189
I109	TELECOM ONE-LINE DIAGRAM AND SCHEDULE	190
I110	ITS DETAILS	191
I111	CCTV CAMERA DETAILS	192
I112	ITS CABINET DETAILS	193
I113	CAMERA POLE & PHONE DETAILS	194
I114	TRUSS ELEVATION DETAIL	195
I115	READER & PLATE PEDESTAL BASE DETAIL	196
I116	READER POLE BASE DETAIL	197
I117	KEY PLAN	198
I118	TYPICAL EXIT LANE EQUIPMENT	199
I119	TYP ORT EQUIP @ GRADE	200
I120	TYP ORT OVERHEAD EQUIP	201
I121	TYPICAL PRECLASS EQUIP	202
I122	TYPICAL ENTRY LANE EQUIP	202A
I123	WB BACKGATE EQUIP	202B
I124	EB BACKGATE EQUIP	202C
I125	TYPICAL DETAILS	202D
I126	TYPICAL DETAILS	202E
I127	EXIT LANE CABLE SCHEDULE	202F
I128	WESTBOUND ORT CABLE SCHEDULE	202G
I129	EASTBOUND ORT CABLE SCHEDULE	202H
I130	ENTRY LANE CABLE SCHEDULE	202I
I131	TYPICAL BACKGATE CABLE SCHEDULE	202J
I132	AVI ANTENNA MOUNTING DETAIL PLAZA CANOPY	202K
I133	AVI ANTENNA MOUNTING DETAIL PLAZA GANTRY	202L
I134	DVAS CAMERA MOUNTING DETAIL PLAZA CANOPY	202M
I135	DVAS CAMERA MOUNTING DETAIL GANTRY	202N
I136	LIDAR MOUNTING DETAIL PLAZA CANOPY	202O
I137	LIDAR MOUNTING DETAIL GANTRY	202P
I138	VES CAMERA MOUNTING DETAIL PLAZA CANOPY	202Q
I139	VES CAMERA MOUNTING DETAIL GANTRY	202R
I140	ILLUMINATOR MOUNTING DETAIL GANTRY	202S

TOLL PLAZA 49 5/15/2020 8:45:05 AM

DESIGN AGENCY
PRIME AE
540 White Pond Drive, Ste. E
Akron, Ohio 44320
(330)-864-7755

NO.	REVISIONS	BY	DATE
1	ADDENDUM 2		5/12/2020
2	ADDENDUM 3	MM	5/15/2020

DESIGNED MWM
CHECKED MWM
DRAWN MAK
IN CHARGE CAR

DRAWINGS LIST

TOLL PLAZA 49

LUCAS COUNTY

PROJECT 58-20-01
DATE: 4/10/2020

G001

2
202

OHIO TURNPIKE AND INFRASTRUCTURE COMMISSION

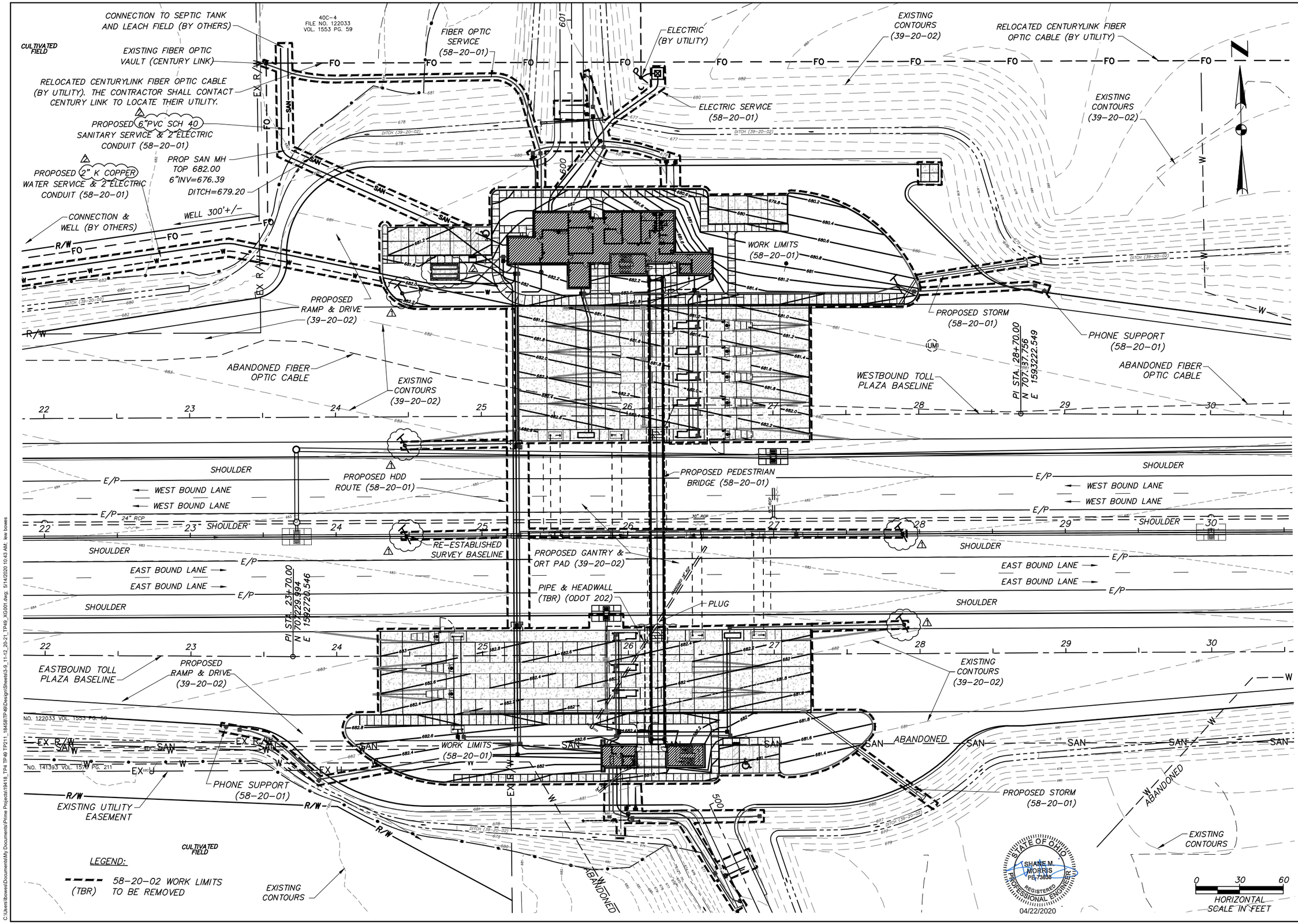

DESIGN AGENCY
PRIME AE
540 White Pond Drive, Ste E
Akron, Ohio 44320
(330)-864-7755

NO.	REVISIONS	BY	DATE
1	ADDENDUM NO.2	LHBJ	12MAY20
2	ADDENDUM NO.3	LHBJ	15MAY20

DESIGNED	CHECKED	DRAWN	IN CHARGE
LHBJ	SMM	LHBJ	SMM

SITE PLAN – EXISTING CONDITIONS
TOLL PLAZA 49
LUCAS COUNTY

PROJECT 58-20-01
DATE: 4/17/2020

C103

15
202

OHIO TURNPIKE AND INFRASTRUCTURE COMMISSION

C:\Users\lbowes\Documents\My Documents\Prime Projects\19418_TP4_TP49 TP211_18458\TP-49\Design\Sheets\3-9_11-12_20-21_TP49_XG001.dwg; 5/14/2020 10:43 AM; lew bowes

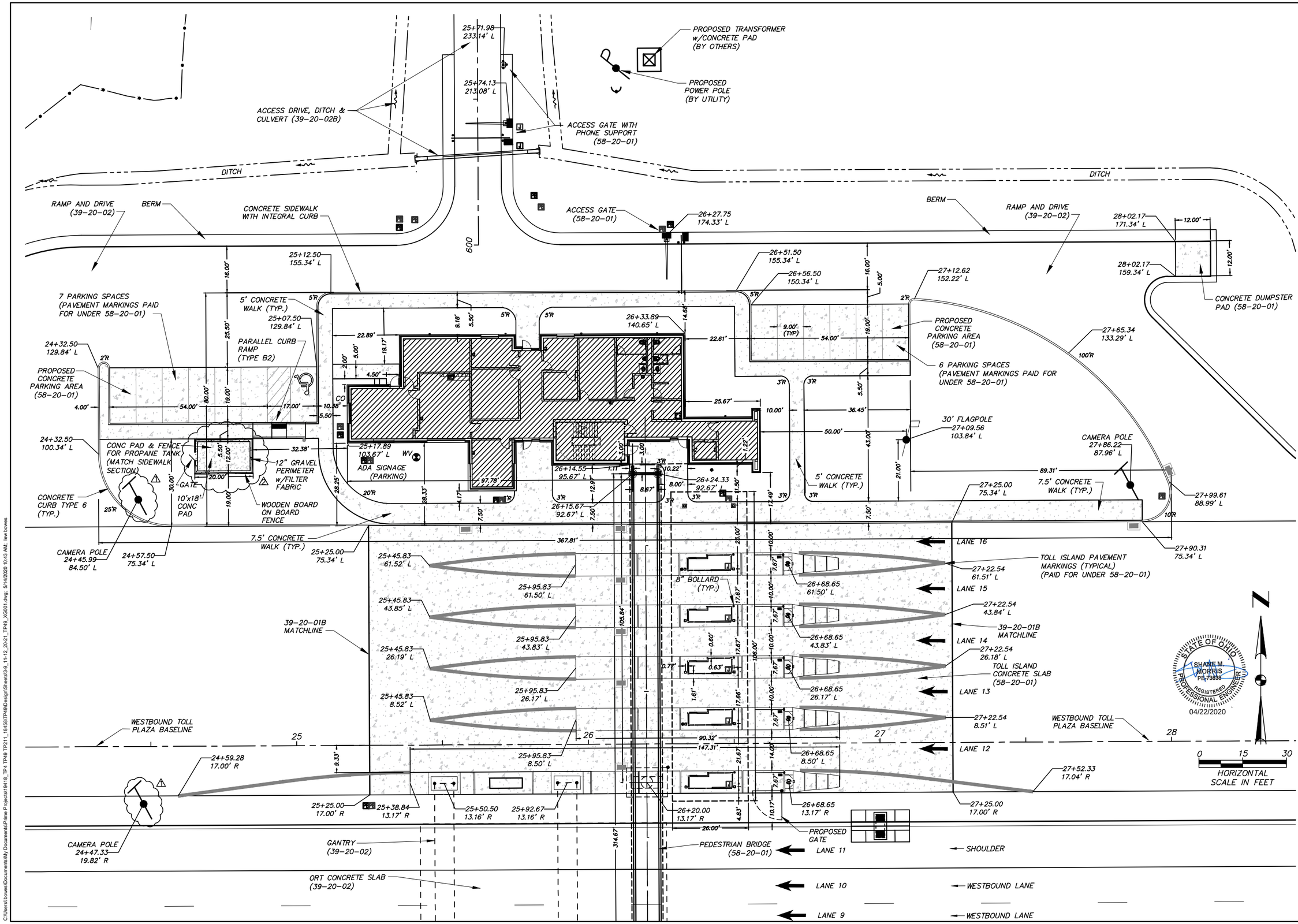

DESIGN AGENCY
PRIME AE
540 White Pond Drive, Ste E
Akron, Ohio 44320
(330)-864-7755

NO.	REVISIONS	BY	DATE
1	ADDENDUM NO.2	LHBJ	12MAY20
2	ADDENDUM NO.3	LHBJ	15MAY20

DESIGNED	CHECKED
LHBJ	SMM
DRAWN	IN CHARGE
LHBJ	SMM

SITE DIMENSION PLAN – NORTH SITE
LUCAS COUNTY
TOLL PLAZA 49

PROJECT 58-20-01
DATE: 4/17/2020

C104

16
202

OHIO TURNPIKE AND INFRASTRUCTURE COMMISSION

C:\Users\lbowen\Documents\My Documents\Prime Projects\19418_TP4 TP49 TP211_18458\TP49\Design\Sheets\3-9_11-12_20-21_TP49_XG001.dwg; 5/14/2020 10:43 AM; lew.bowes

NOTES:

1. THE BORING PIT SHALL BE COORDINATED WITH THE MOT PORTABLE CONCRETE BARRIER WALL AND LIVE TRAFFIC.
2. SHEETING IS REQUIRED BEHIND PORTABLE CONCRETE BARRIER THAT IS IN PLACE BY PROJECT 39-20-02A ON THE EXISTING SHOULDER DURING THE 2020 CONSTRUCTION SEASON.

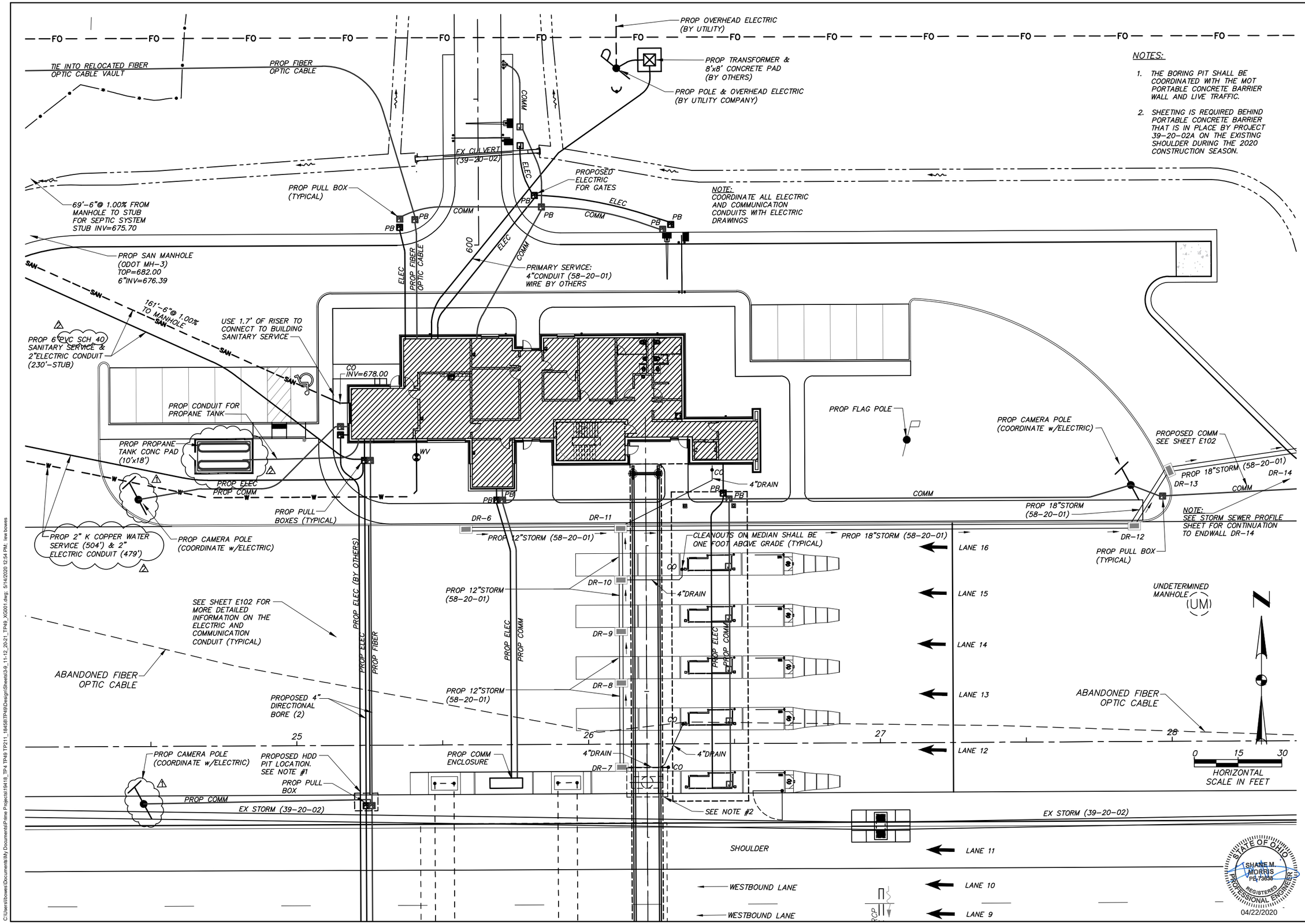

STATE OF OHIO
SHANE M. MORRIS
PE.73835
REGISTERED PROFESSIONAL ENGINEER
04/22/2020

C:\Users\lbowen\Documents\My Documents\Prime Projects\19418_TP4 TP49 TP211_18458\TP49\Design\Sheets\3-9_11-12_20-21_TP49_XG001.dwg; 5/14/2020 12:54 PM; lew.bowen

DESIGN AGENCY
PRIME AE
540 White Pond Drive, Ste. E
Akron, Ohio 44320
(330)-864-7755

NO.	REVISIONS	BY	DATE
2	ADDENDUM NO.2	LHBJ	12MAY20
3	ADDENDUM NO.3	LHBJ	15MAY20

DESIGNED	CHECKED
LHBJ	SMM
DRAWN	IN CHARGE
LHBJ	SMM

SITE
LUCAS COUNTY
SITE UTILITY PLAN – NORTH SITE
TOLL PLAZA 49

PROJECT 58-20-01
DATE: 4/17/2020

C106

18
202

OHIO TURNPIKE AND INFRASTRUCTURE COMMISSION

C:\Users\lbowes\Documents\My Documents\Prime Projects\19418_TP4 TP49 TP211_18458\TP49\Design\Sheets\3-9_11-12_20-21_TP49_XG001.dwg; 5/14/2020 10:44 AM; lew bowes

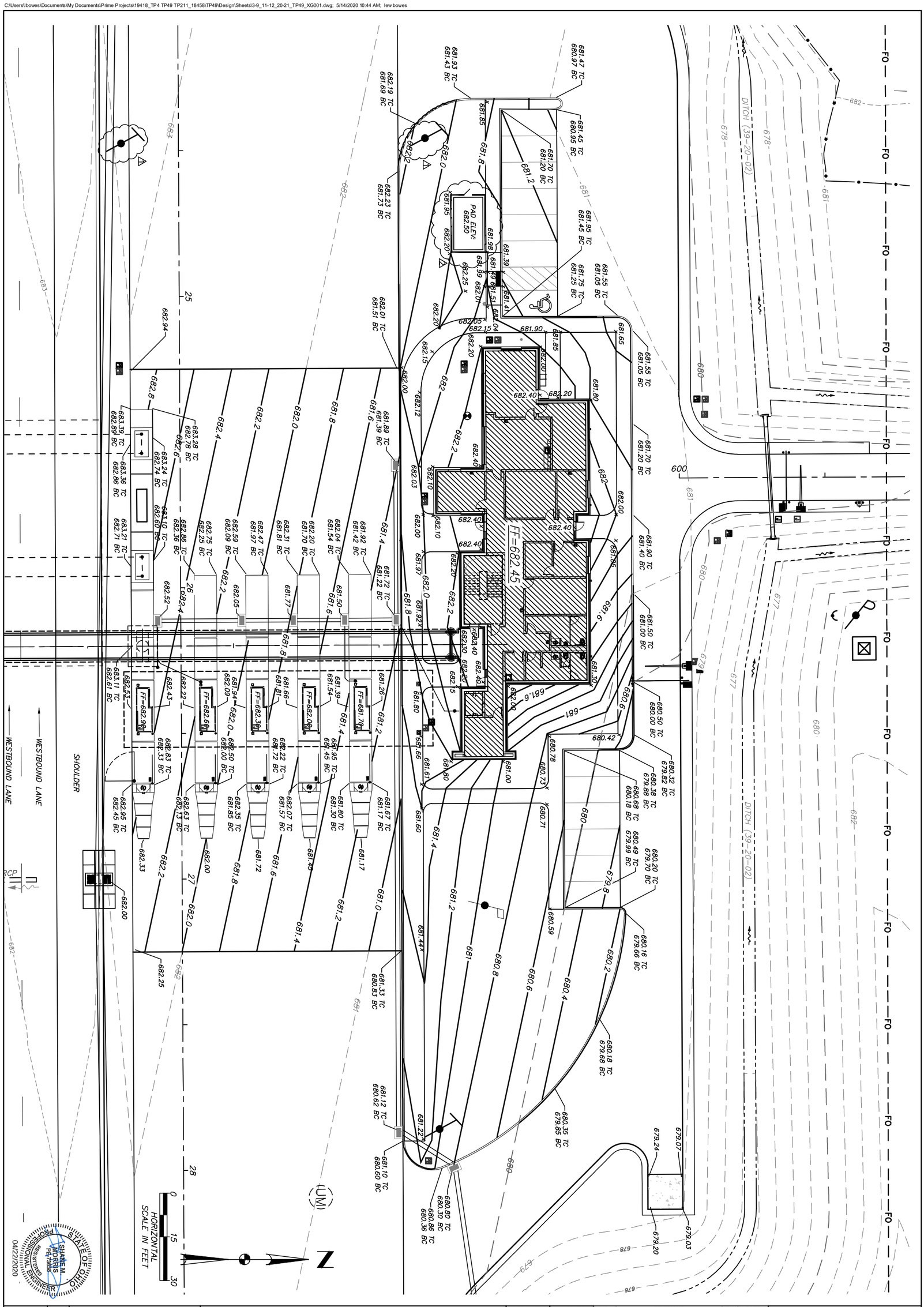

20 / 202	C108	PROJECT 58-20-01	SITE GRADING PLAN – NORTH SITE	DESIGNED LHBJ	CHECKED SMM	NO.	REVISIONS	BY	DATE
		DATE: 4/17/2020	TOLL PLAZA 49 LUCAS COUNTY	DRAWN LHBJ	IN CHARGE SMM	1	ADDENDUM NO.2	LHBJ	12MAY20
						2	ADDENDUM NO.3	LHBJ	15MAY20

DESIGN AGENCY
PRIME AE
540 White Pond Drive, Ste. E
Akron, Ohio 44320
(330)-864-7755

OHIO TURNPIKE

OHIO TURNPIKE AND INFRASTRUCTURE COMMISSION

OHIO TURNPIKE

NOTES:

1. ALL SIDEWALKS WILL HAVE CONTRACTION JOINTS wo/DOWELS AS SHOWN AND 1/2" EXPANSION JOINTS AT BUILDING AND WHERE SPECIFIED.
2. COORDINATE THE SIDEWALK w/ARCHITECTURAL DETAILS AT THE DOORS.

TYPE K PAVEMENT JOINT

THIS JOINT SHALL BE CONSTRUCTED IN THE CONCRETE PAVEMENT AT THE LOCATIONS SHOWN ON SHEETS C109 & C110 AND SHALL PROVIDE FOR SLAB MOVEMENT IN BOTH THE LONGITUDINAL AND TRANSVERSE DIRECTION WITH LOAD TRANSFER BY MECHANICAL MEANS. THIS JOINT SHALL BE "DIAMOND DOWEL" AT 18" CENTERS AS MANUFACTURED BY PNA, INC. (704) 821-7000, OR APPROVED EQUAL. (NOTE: KEYWAYS MAY ONLY BE USED IN PAVEMENT PLACED WITH THE SLIP FORM OPERATION.)

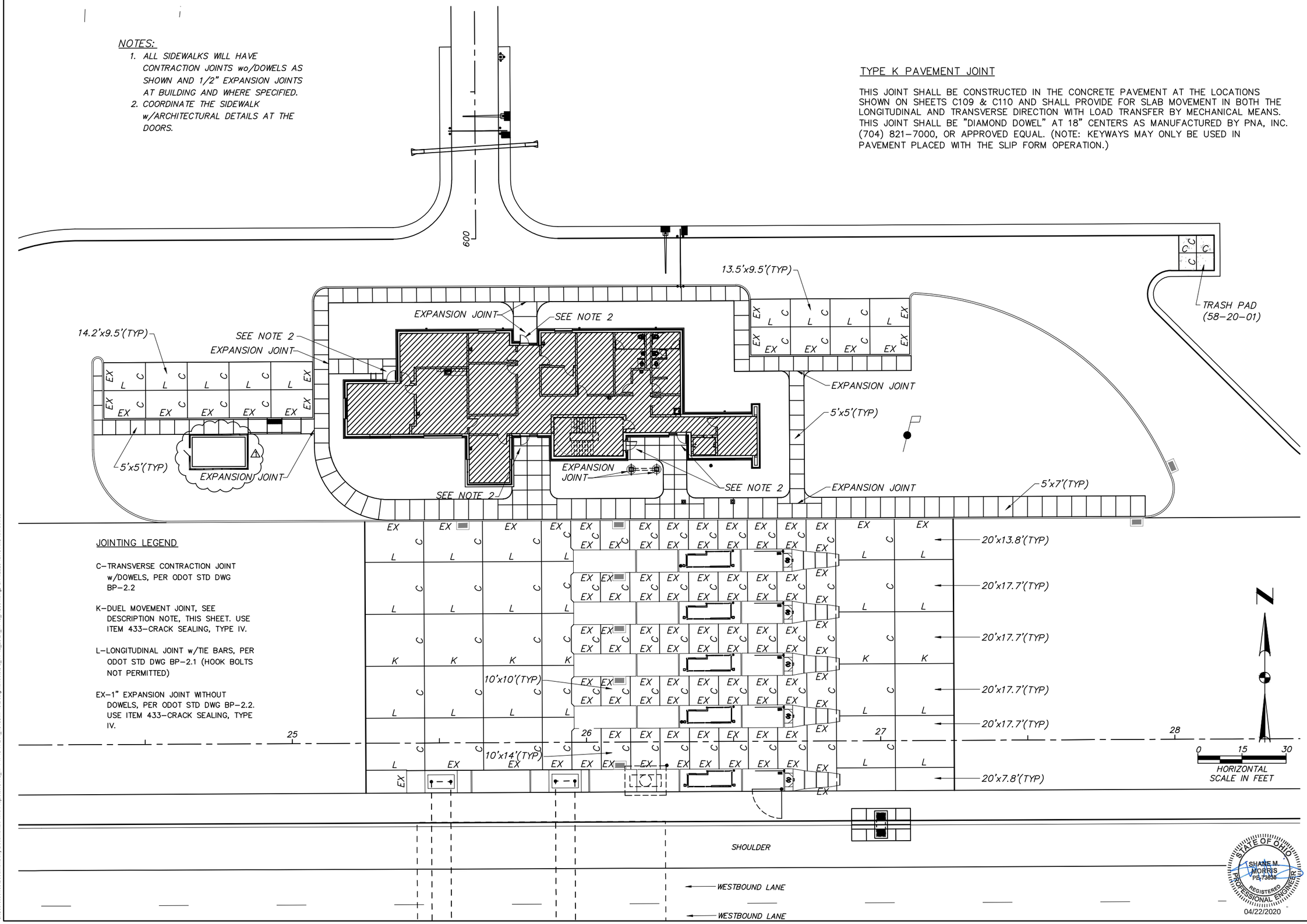

JOINTING LEGEND

C-TRANSVERSE CONTRACTION JOINT w/DOWELS, PER ODOT STD DWG BP-2.2

K-DUEL MOVEMENT JOINT, SEE DESCRIPTION NOTE, THIS SHEET. USE ITEM 433-CRACK SEALING, TYPE IV.

L-LONGITUDINAL JOINT w/TIE BARS, PER ODOT STD DWG BP-2.1 (HOOK BOLTS NOT PERMITTED)

EX-1" EXPANSION JOINT WITHOUT DOWELS, PER ODOT STD DWG BP-2.2. USE ITEM 433-CRACK SEALING, TYPE IV.

STATE OF OHIO
SHANE M. MORRIS
PE-73838
REGISTERED PROFESSIONAL ENGINEER
04/22/2020

DESIGN AGENCY
PRIME AE
540 White Pond Drive, Ste. E
Akron, Ohio 44320
(330)-864-7755

NO.	REVISIONS	BY	DATE
1	ADDENDUM NO.3	LHBJ	15MAY20

DESIGNED	CHECKED
LHBJ	SMM
DRAWN	IN CHARGE
LHBJ	SMM

SITE JOINTING PLAN – NORTH SITE

LUCAS COUNTY

TOLL PLAZA 49

PROJECT 58-20-01

DATE: 4/17/2020

C111

23
202

OHIO TURNPIKE AND INFRASTRUCTURE COMMISSION

C:\Users\lbowes\Documents\My Documents\Prime Projects\19418_TP4 TP49 TP211_18458\TP49\Design\Sheets\3-9_11-12_20-21_TP49_XG001.dwg, 5/14/2020 10:45 AM, lee bowes

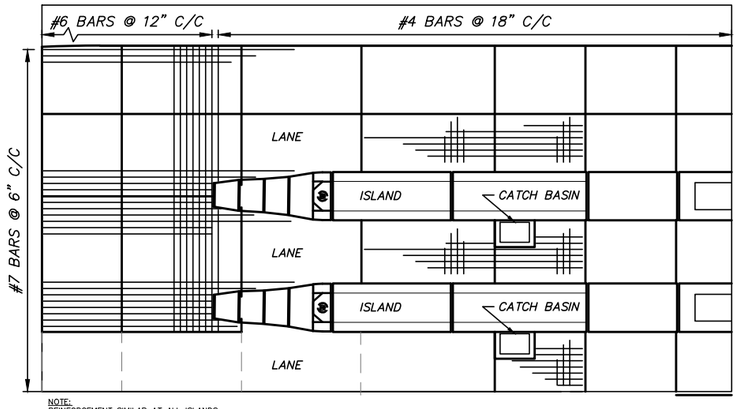

NOTE:
REINFORCEMENT SIMILAR AT ALL ISLANDS.

PAVEMENT REINFORCEMENT PARTIAL PLAN
N.T.S.

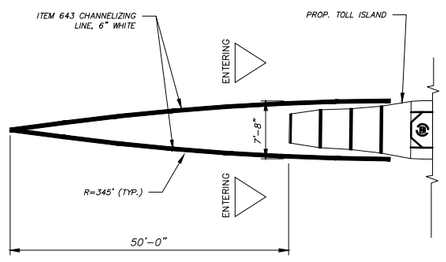

PAVEMENT MARKING DETAIL FOR PROPOSED ENTRANCE/EXIT LANES
N.T.S.

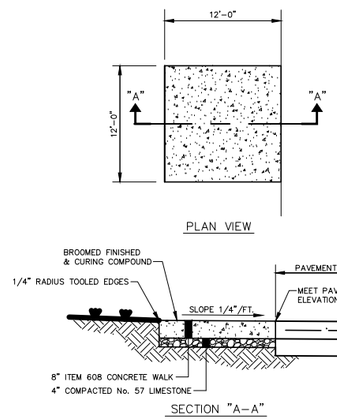

NOTE:
USE SECTION A-A FOR THE CONSTRUCTION OF THE PARKING STALL AREA PAVEMENT.

CONCRETE PAD FOR TRASH RECEPTACLE DETAIL
N.T.S.

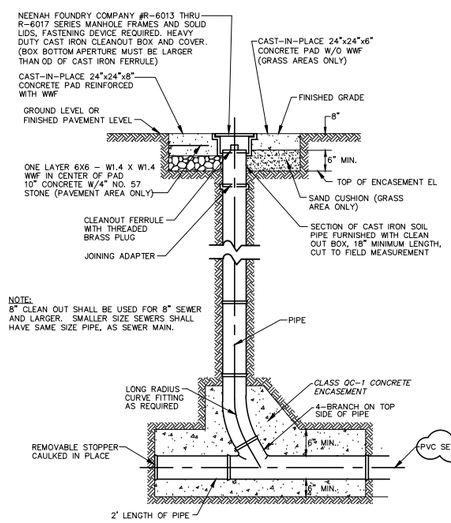

NOTE:
8" CLEAN OUT SHALL BE USED FOR 8" SEWER AND LARGER. SMALLER SIZE SEWERS SHALL HAVE SAME SIZE PIPE, AS SEWER MAIN.

STANDARD CLEAN-OUT DETAIL
N.T.S.

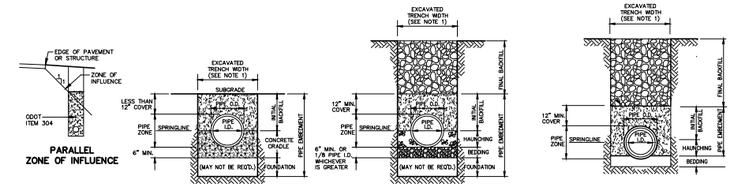

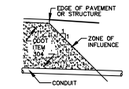

CLASS 'A' PIPE EMBEDMENT **CLASS 'B' PIPE EMBEDMENT** **CLASS 'C' PIPE EMBEDMENT**

NOTES:

1. MAXIMUM EXCAVATED TRENCH WIDTH: THE MAXIMUM EXCAVATED TRENCH WIDTH FROM THE BOTTOM OF THE TRENCH TO 12" OVER THE TOP OF THE PIPE (WITHIN PIPE EMBEDMENT) SHALL BE O.D. + 24" FOR ALL PIPES UP TO AND INCLUDING 24" I.D. + 30" FOR PIPE FROM 24" I.D. TO 54" I.D. AND O.D. + 48" FOR PIPES SIZES 60" I.D. AND OVER.

2. FOUNDATION: WHERE AN UNSTABLE TRENCH BOTTOM CONDITION IS ENCOUNTERED, THE CONTRACTOR SHALL EXCAVATE TO A DEPTH REQUIRED BY THE ENGINEER AND REPLACE WITH MATERIAL AS DIRECTED BY THE ENGINEER.

3. PIPE EMBEDMENT:

CLASS A: CLASS A PIPE EMBEDMENT SHALL BE USED FOR ALL PIPING UNDER PAVEMENT OR STRUCTURES WITH LESS THAN 12 INCHES OF PIPE COVER TO THE SUBGRADE. THE CONCRETE CRADLE SHALL BE IN ACCORDANCE WITH ODOT ITEM 499, CLASS "QC-1". THE INITIAL BACKFILL SHALL BE AASHTO NO. 57 GRANULAR PIPE EMBEDMENT.

CLASS B: CLASS B PIPE EMBEDMENT SHALL BE USED FOR ALL PIPING UNLESS OTHERWISE NOTED ON THE PLANS OR AUTHORIZED BY THE ENGINEER. THE BEDDING AND HAUNCHING SHALL BE AASHTO NO. 57 GRANULAR PIPE EMBEDMENT. IN ALL AREAS UNDER PAVEMENT, STRUCTURES OR WITHIN THE ZONE OF INFLUENCE, THE INITIAL BACKFILL SHALL BE AASHTO NO. 57 STONE GRANULAR PIPE EMBEDMENT. IN ALL AREAS OUTSIDE OF PAVEMENT, STRUCTURES OR THE ZONE OF INFLUENCE, THE INITIAL BACKFILL SHALL BE SUITABLE ON-SITE MATERIAL APPROVED BY THE ENGINEER FOR ONLY REINFORCED CONCRETE PIPE AND DUCTILE IRON PIPE. THE INITIAL BACKFILL FOR ALL OTHER PIPES SHALL BE AASHTO NO. 57 GRANULAR PIPE EMBEDMENT.

CLASS QC-1: CLASS QC-1 PIPE EMBEDMENT SHALL ONLY BE USED FOR DUCTILE IRON WATER MAIN (4" AND LARGER), DUCTILE IRON FORCE MAINS OR AS AUTHORIZED BY THE ENGINEER. THE BEDDING AND PIPE EMBEDMENT SHALL BE SAND OR PEA GRAVEL IN ALL AREAS.

4. FINAL BACKFILL: IN ALL AREAS UNDER PAVEMENT, STRUCTURES OR WITHIN THE ZONE OF INFLUENCE THE FINAL BACKFILL SHALL BE ODOT ITEM 304. IN ALL AREAS OUTSIDE OF PAVEMENT, STRUCTURES OR THE ZONE OF INFLUENCE, THE FINAL BACKFILL SHALL BE SUITABLE ON-SITE MATERIAL APPROVED BY THE ENGINEER.

5. SPECIFICATIONS: ALL TRENCHING, PIPE EMBEDMENT AND BACKFILL MATERIALS SHALL BE IN ACCORDANCE WITH SP611 AS MODIFIED BY THIS DETAIL AND THE CONTRACT DOCUMENTS.

6. CLAY TRENCH DAMS: CLAY TRENCH DAMS SHALL BE REQUIRED AS SHOWN ON PLANS OR WHEN AND WHERE NECESSARY AS DIRECTED BY THE ENGINEER.

7. DETECTOR TAPE: IF REQUIRED IN THE SPECIFICATIONS, INSTALL DETECTABLE WARNING TAPE ABOVE UTILITIES, 12" BELOW FINISHED GRADE, EXCEPT 6 INCHES BELOW SUBGRADE UNDER PAVEMENT AND SLABS.

8. APPLICABLE FOR ALL SITE CONC. STORM SEWER, PVC SANITARY SEWER AND COPPER WATER SERVICE. △1

TRENCHING, EMBEDMENT & BACKFILL DETAIL FOR STORM SEWER, SANITARY SEWER & WATER MAIN
N.T.S.

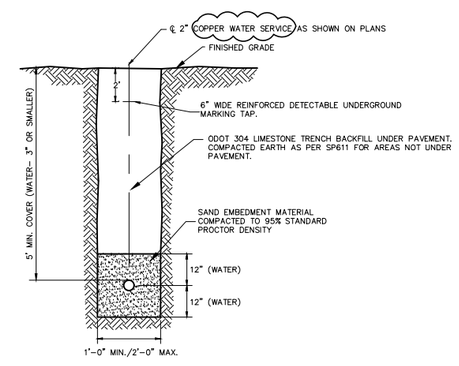

WATER LINE (3" OR SMALLER) TRENCH DETAIL & PROPANE TRENCH DETAIL △1
N.T.S.

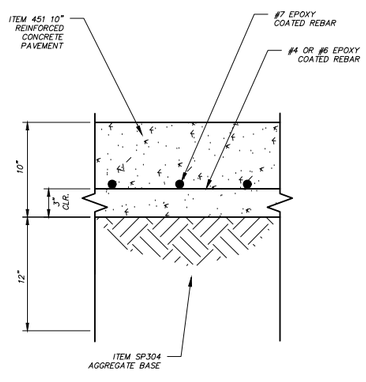

CONCRETE PAVEMENT DETAIL
N.T.S.

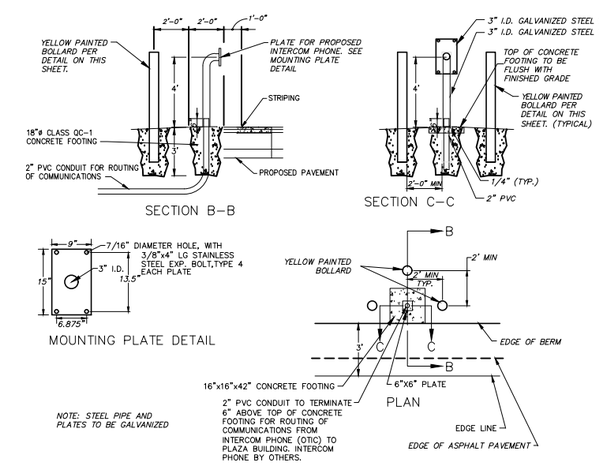

NOTE: STEEL PIPE AND PLATES TO BE GALVANIZED

INTERCOM PHONE PAD & SUPPORT DETAIL
N.T.S.

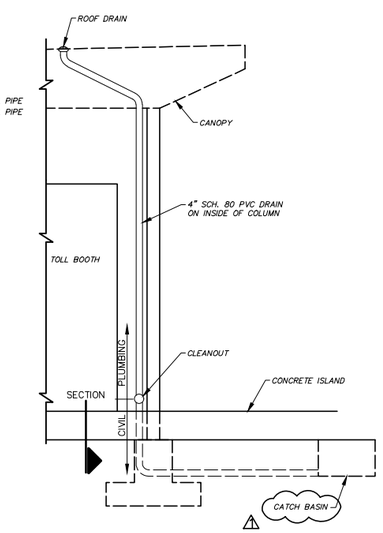

ROOF DRAIN DETAIL
N.T.S.

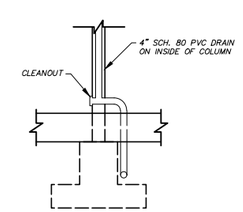

SECTION
N.T.S.

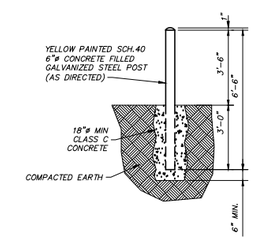

TYP. BOLLARD DETAIL
N.T.S.

STATE OF OHIO
SHANE M. MORRIS
PE.73838
REGISTERED PROFESSIONAL ENGINEER
04/22/2020

DESIGN AGENCY
PRIME AE
540 White Pond Drive, Ste E
Akron, Ohio 44320
(330)-864-7755

NO.	REVISIONS	BY	DATE
△1	ADDENDUM NO.3	LHBJ	15MAY20

DESIGNED	CHECKED
LHBJ	SMM
DRAWN	IN CHARGE
LHBJ	SMM

MISCELLANEOUS SITE DETAILS

TOLL PLAZA 49 — LUCAS COUNTY

PROJECT 58-20-01
DATE: 4/17/2020

C119

31 / 202

OHIO TURNPIKE AND INFRASTRUCTURE COMMISSION

C:\Users\lbowes\Documents\My Documents\Prime Projects\19418_TP4 TP49 TP211_184581\TP49\Design\Sheets\13-19_TP49_GY001.dwg; 5/15/2020 8:44 AM; lewe bowers

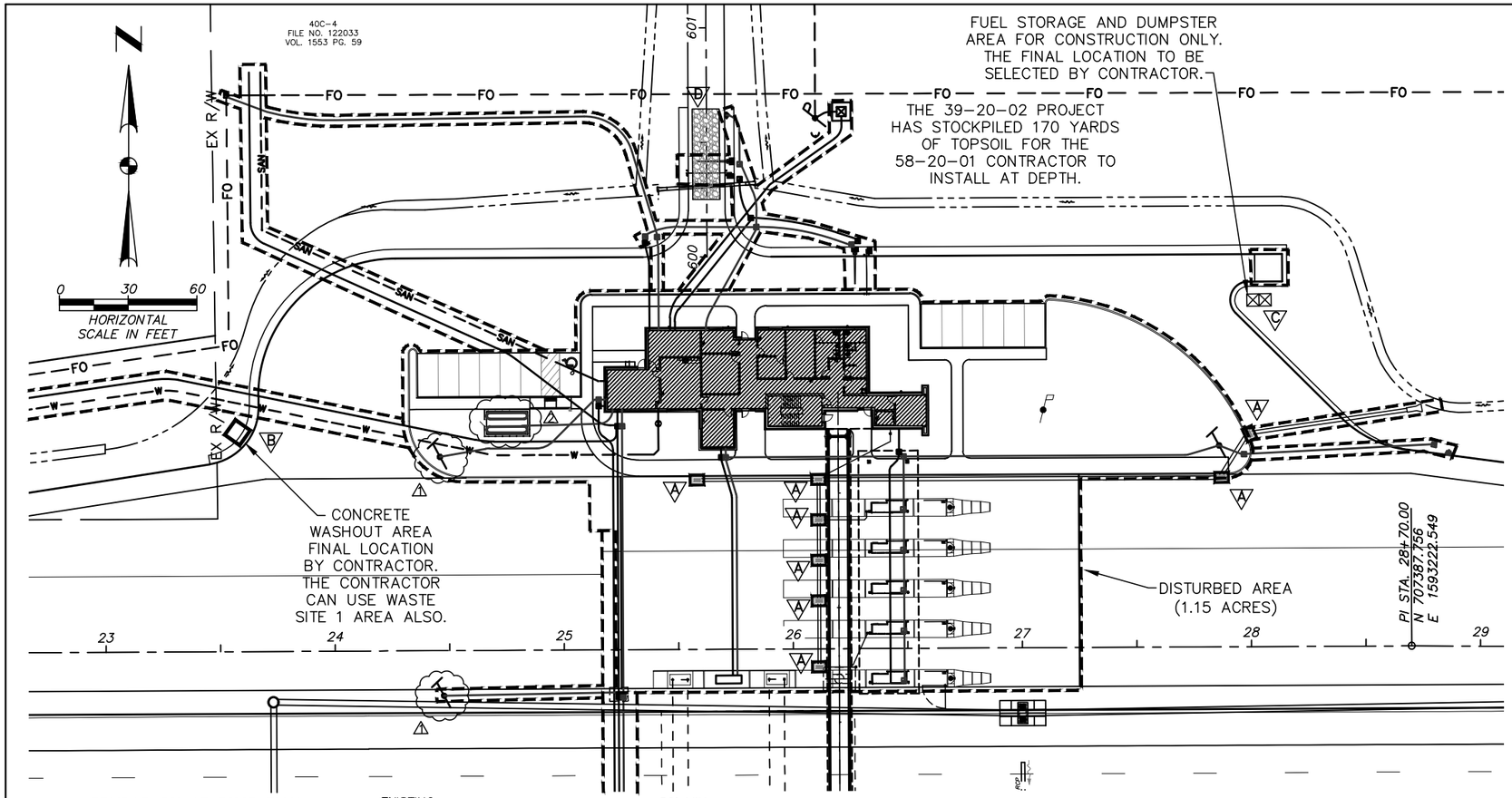

TEMPORARY STABILIZATION

AREAS REQUIRING TEMPORARY STABILIZATION	*TIME FRAME TO APPLY EROSION CONTROLS*
ANY AREAS WITHIN 50 FEET OF A STREAM AND NOT AT FINAL GRADE	WITHIN TWO DAYS OF THE MOST RECENT DISTURBANCE IF THE AREA WILL REMAIN IDLE FOR MORE THAN 14 DAYS
FOR ALL CONSTRUCTION ACTIVITIES, ANY DISTURBED AREAS THAT WILL BE DORMANT FOR MORE THAN 14 DAYS BUT LESS THAN ONE YEAR, AND NOT WITHIN 50 FEET OF A STREAM	WITHIN SEVEN DAYS OF THE MOST RECENT DISTURBANCE WITHIN THE AREA FOR RESIDENTIAL SUBDIVISIONS, DISTURBED AREAS MUST BE STABILIZED AT LEAST SEVEN DAYS PRIOR TO TRANSFER OF PERMIT COVERAGE FOR THE INDIVIDUAL LOT(S).
DISTURBED AREAS THAT WILL BE IDLE OVER WINTER	PRIOR TO THE ONSET OF WINTER WEATHER

PERMANENT STABILIZATION

AREAS REQUIRING PERMANENT STABILIZATION	*TIME FRAME TO APPLY EROSION CONTROLS*
ANY AREAS THAT WILL LIE DORMANT OF ONE YEAR OR MORE	WITHIN SEVEN DAYS OF THE MOST RECENT DISTURBANCE
ANY AREAS WITHIN 50 FEET OF A STREAM AND AT FINAL GRADE	WITHIN TWO DAYS OF REACHING FINAL GRADE
ANY OTHER AREAS AT FINAL GRADE	WITHIN SEVEN DAYS OF REACHING FINAL GRADE WITHIN THAT AREA

OHIO UTILITIES PROTECTION SERVICE
CALL BEFORE YOU DIG
800-362-2764 OR 8-1-1
WWW.OUPS.ORG

STATE OF OHIO
SHANE M. MORRIS
PE.73858
REGISTERED PROFESSIONAL ENGINEER
04/22/2020

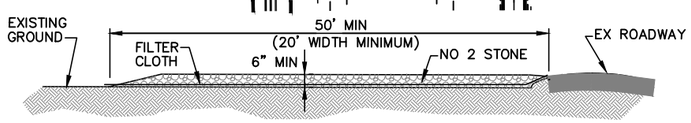

CONSTRUCTION ENTRANCE DETAIL (D)

NO SCALE

CONSTRUCTION SPECIFICATIONS

STONE SIZE– NO. 2 (2-1/2" TO 1-1/2") OR ITS EQUIVALENT.

LENGTH – AS EFFECTIVE, BUT NOT LESS THAN 50 FEET.

THICKNESS – NOT LESS THAN SIX (6) INCHES

WIDTH – TWENTY (20) FOOT MINIMUM, BUT NOT LESS THAN FULL WIDTH OF ALL POINTS OF INGRESS OR EGRESS.

FILTER CLOTH – WILL BE PLACED OVER THE ENTIRE AREA PRIOR TO PLACING THE STONE.

SURFACE WATER – ALL SURFACE WATER FLOWING OR DIVERTED TOWARD CONSTRUCTION ENTRANCES SHALL BE PIPED ACROSS THE ENTRANCE. IF PIPING IS IMPRACTICAL, A MOUNTABLE BERM WITH 5:1 SLOPES WILL BE PERMITTED.

MAINTENANCE – THE ENTRANCE SHALL BE MAINTAINED IN A CONDITION WHICH WILL PREVENT TRACKING OR FLOWING OF SEDIMENT ONTO PUBLIC RIGHT-OF-WAY. THIS MAY REQUIRE PERIODIC TOP DRESSING WITH ADDITIONAL STONE AS CONDITIONS DEMAND AND REPAIR AND/OR CLEAN-OUT OF ANY MEASURES USED TO TRAP SEDIMENT. ALL SEDIMENT SPILLED, DROPPED, WASHED OR TRACKED ONTO PUBLIC RIGHT-OF-WAY MUST BE REMOVED IMMEDIATELY.

WASHING – WHEN NECESSARY, WHEELS SHALL BE CLEANED TO REMOVE SEDIMENT PRIOR TO ENTRANCE ONTO PUBLIC RIGHT-OF-WAY. WHEN WASHING IS REQUIRED, IT SHALL BE DONE ON AN AREA STABILIZED WITH CRUSHED STONE WHICH DRAINS INTO AN APPROVED SEDIMENT TRAP. ALL SEDIMENT SHALL BE PREVENTED FROM ENTERING ANY STORM DRAIN, DITCH, OR WATERCOURSE THROUGH USE OF SAND BAGS, GRAVEL, BOARDS OR OTHER APPROVED METHODS.

PERIODIC INSPECTION AND NEEDED MAINTENANCE SHALL BE PROVIDED AFTER EACH RAIN EVENT.

SEDIMENT & SOIL EROSION LEGEND

(A) : CATCH BASIN PROTECTION
(B) : CONCRETE WASHOUT AREA
(C) : FUEL STORAGE AND DUMPSTER
(D) : CONSTRUCTION ENTRANCE DRIVE

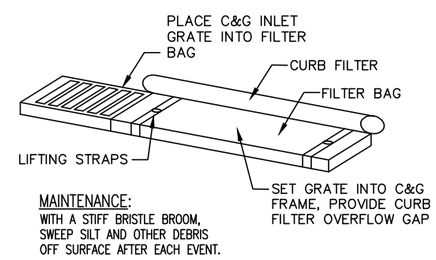

MAINTENANCE:
WITH A STIFF BRISTLE BROOM, SWEEP SILT AND OTHER DEBRIS OFF SURFACE AFTER EACH EVENT.

CURB INLET PROTECTION WITH GRATE (A)

NO SCALE

NOTE:
PER OEPA, THE CONTRACTOR MUST UTILIZE A LINER FOR THE CONCRETE WASHOUT AREA.

CONCRETE TRUCKS SHALL USE THESE AREAS TO WASHOUT TRUCKS. THE ACCUMULATED CONCRETE SHALL BE REMOVED FROM THE SITE AND DISPOSED OF PROPERLY.

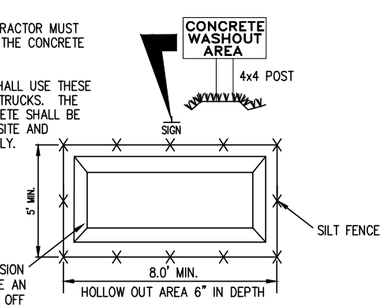

PLASTIC LINE DEPRESSION FOR REMOVAL OR USE AN ABOVE GROUND ROLL OFF BOX WITH LINER AS AN ALTERNATE.

CONCRETE WASHOUT AREA (B)

NO SCALE

SWPP GENERAL NOTES

CONTRACTOR RESPONSIBILITY: DETAILS HAVE BEEN PROVIDED ON THE PLANS IN AN EFFORT TO HELP THE CONTRACTOR PROVIDE EROSION AND SEDIMENTATION CONTROL. THE DETAILS SHOWN ON THE PLAN SHALL BE CONSIDERED A MINIMUM. ADDITIONAL OR ALTERNATE DETAILS MAY BE FOUND IN THE O.D.N.R. MANUAL 'RAINWATER AND LAND DEVELOPMENT.' THE CONTRACTOR SHALL BE SOLELY RESPONSIBLE FOR PROVIDING NECESSARY AND ADEQUATE MEASURES FOR PROPER CONTROL OF EROSION AND SEDIMENT RUNOFF FROM THE SITE ALONG WITH PROPERTY MAINTENANCE AND INSPECTION IN COMPLIANCE WITH NPDES GENERAL PERMIT FOR STORM WATER DISCHARGES ASSOCIATED WITH CONSTRUCTION ACTIVITY.

PRIOR TO CONSTRUCTION OPERATIONS IN A PARTICULAR AREA, ALL SEDIMENTATION AND EROSION CONTROL FEATURES SHALL BE IN PLACE. FIELD ADJUSTMENTS WITH RESPECT TO LOCATION AND DIMENSIONS MAY BE MADE BY THE ENGINEER.

THE CONTRACTOR SHALL PLACE INLET AND CHANNEL PROTECTION FOR EROSION CONTROL IMMEDIATELY AFTER CONSTRUCTION OF THE INLETS OR CHANNELS WHICH ARE NOT TRIBUTARY TO A SEDIMENT BASIN OR DAM.

IT MAY BECOME NECESSARY TO REMOVE PORTIONS OF THE BARRIER DURING CONSTRUCTION TO FACILITATE THE GRADING OPERATIONS IN CERTAIN AREAS. HOWEVER, THE BARRIER SHALL BE IN PLACE IN THE EVENING OR DURING ANY INCLEMENT WEATHER.

THE LIMITS OF SEEDING AND MULCHING ARE AS SHOWN WITHIN THE PLANS. THOSE AREAS DISTURBED OUTSIDE THE SEEDING LIMITS SHALL BE SEEDED AND MULCHED AT THE CONTRACTOR'S EXPENSE.

'TEMPORARY SEEDING' NO AREA FOR WHICH GRADING HAS BEEN COMPLETED OR WHERE A DENUDED AREA WILL REMAIN IDLE FOR MORE THAN 21 DAYS SHALL BE LEFT UNSEEDED FOR LONGER THAN 7 DAYS. IF PERMANENT SEED IS NOT APPLIED AT THIS TIME, TEMPORARY SEEDING SHALL BE DONE AT THE FOLLOWING RATES:

MARCH 1 TO NOVEMBER 15

SEED: OATS	2 LBS./1,000 S.F.
FERTILIZER: (12: 12:12)	25 LBS./1,000 S.F.
MULCH: (STRAW OR HAY)	2 TONS/ACRE

NOVEMBER 15 TO NOVEMBER 1:

SEED: ANNUAL RYE	2 LBS./1,000 S.F.
FERTILIZER: (12: 12:12)	25 LBS./1,000 S.F.
MULCH: (STRAW OR HAY)	2 TONS/ACRE

NOVEMBER 1 TO MARCH 1:

MULCH (ONLY): STRAW OR HAY	2 TONS/ACRE

"PERMANENT SEEDING" SHALL BE DONE BETWEEN MARCH 15 AND NOVEMBER 15. IF SEEDING IS DONE BETWEEN NOVEMBER 15 AND MARCH 15, IT SHALL BE CLASSIFIED AS 'TEMPORARY SEEDING.' PERMANENT SEED SHALL BE 40% KENTUCKY BLUEGRASS, 40% CREEPING RED FESCUE, 20% ANNUAL RYEGRASS. PERMANENT SEEDING SHALL CONSIST OF FERTILIZING, WATER AND SEEDING RATES INDICATED UNDER ITEM 659. SEEDING SHALL BE APPLIED WITHIN TWO (2) DAYS AFTER FINAL GRADING OR FOLLOWING SEED BED PREPARATION.

RATES OF APPLICATION OF ITEM 659:

SEED	4 LBS./1,000 S.F.
FERTILIZER: (12: 12: 12)	20 LBS./1,000 S.F.
MULCH: STRAW (HAY)	2 TONS/ACRE (3 TONS/ACRE)

MAINTENANCE: IT IS THE CONTRACTOR'S RESPONSIBILITY TO MAINTAIN THE SEDIMENT CONTROL FEATURES USED ON THIS PROJECT. THE SITE SHALL BE INSPECTED PERIODICALLY AND WITHIN 24 HOURS OF A SIGNIFICANT RAINFALL. RECORDS OF THESE INSPECTIONS SHALL BE KEPT AND MADE AVAILABLE TO JURISDICTIONAL AGENCIES IF REQUESTED. ANY SEDIMENT OR DEBRIS WHICH HAS REDUCED THE EFFICIENCY OF A STRUCTURE SHALL BE REMOVED IMMEDIATELY. SHOULD A STRUCTURE OR FEATURE BECOME DAMAGED, THE CONTRACTOR SHALL REPAIR OR REPLACE AT NO ADDITIONAL COST TO THE OWNER. NOT ALL DETAILS SHOWN ON THIS SHEET MAY BE REQUIRED FOR THIS PROJECT. REFERENCE SEDIMENT CONTROL PLAN.

THE COST FOR TEMPORARY CHANNELS, SEDIMENT DAMS, SEDIMENT BASINS, AND OTHER APPURTENANT EARTHMOVING OPERATIONS SHALL BE INCLUDED IN THE PRICE BID FOR EROSION AND SEDIMENTATION CONTROL QUANTITIES.

THE CONTRACTOR SHALL BE RESPONSIBLE TO ENSURE THAT OFF-SITE TRACKING OF SEDIMENTS BY VEHICLES AND EQUIPMENT IS MINIMIZED. ALL SUCH OFF-SITE SEDIMENT SHALL BE CLEANED UP DAILY. CONSTRUCTION OF STABILIZED CONSTRUCTION ENTRANCES ARE A PART OF THAT RESPONSIBILITY.

STREET CLEANING (ON AN AS-NEEDED BASIS) IS REQUIRED THROUGH THE DURATION OF THIS CONSTRUCTION PROJECT. THIS INCLUDES SWEEPING, POWER CLEANING AND (IF NECESSARY) MANUAL REMOVAL OF DIRT OR MUD IN THE STREET GUTTERS.

THE CONTRACTOR SHALL BE RESPONSIBLE TO ENSURE THAT NO SOLID OR LIQUID WASTE IS DISCHARGED INTO STORM WATER RUNOFF. SEDIMENT-LADEN WATER SHALL BE FILTERED THROUGH THE USE OF SEDIMENT FILTERING FENCES OR SEDIMENTATION BASINS PRIOR TO DISCHARGE TO SURFACE WATERS. CONCRETE TRUCKS WILL NOT BE ALLOWED TO WASH OUT OR DISCHARGE SURPLUS CONCRETE INTO OR ALONGSIDE RIVERS, STREAMS, AND CREEKS OR INTO NATURAL OR MAN-MADE CHANNELS OR SWALES LEADING THERETO. CONCRETE TRUCK WASH WATER AND SURPLUS CONCRETE SHALL BE CONFINED TO AREAS APPROVED BY THE ENGINEER; AFTER SOLIDIFYING, THESE WASTE MATERIALS SHALL BE REMOVED FROM THE SITE.

ALL EROSION AND SEDIMENT CONTROL PRACTICES ARE SUBJECT TO FIELD INSPECTIONS.

NOTE:

A COPY OF THE APPROVED EPA STORM WATER PERMIT WILL BE PROVIDED BY THE 39-20-02 CONTRACTOR. THIS WORK WILL BE INCLUDED WITHIN THAT EPA PERMIT.

THIS PLAN MUST BE POSTED ON-SITE. A COPY OF THE SWPP PLAN AND THE APPROVED EPA STORM WATER PERMIT (WITH THE SITE SPECIFIC NOI NUMBER, IF REQUIRED) SHALL BE KEPT ON-SITE AT ALL TIMES.

THE CONTRACTOR SHALL BE RESPONSIBLE FOR MAINTAINING ON-SITE DRAINAGE AT ALL TIMES DURING CONSTRUCTION. NO SEPARATE PAYMENT SHALL BE MADE FOR MAINTAINING DRAINAGE.

DESIGN AGENCY
PRIME AE
540 White Pond Drive, Ste E
Akron, Ohio 44320
(330)-864-7755

NO.	REVISIONS	BY	DATE
2	ADDENDUM NO.2	LHBJ	12MAY20
3	ADDENDUM NO.3	LHBJ	15MAY20

DESIGNED	CHECKED	DRAWN	IN CHARGE
LHBJ	SMM	LHBJ	SMM

LUCAS COUNTY

SWPPP – NORTH SITE

TOLL PLAZA 49

PROJECT 58-20-01
DATE: 4/17/2020

C120

32
202

OHIO TURNPIKE AND INFRASTRUCTURE COMMISSION

C:\Users\lbowers\Documents\My Documents\Prime Projects\19418_TP4 TP49 TP211_18458\TP49\Design\Sheets\3-9_11-12_20-21_TP49_XG001.dwg; 5/14/2020 10:46 AM; lew bowers

EXTERIOR MATERIAL LEGEND

MP-1	COMPOSITE CLEAR ANODIZED ALUM. PANEL	GL-1	ALUMINUM WINDOW W/ LOW E , TINTED INSULATED GLASS	X	DENOTES WINDOW TYPE - SEE A604
MP-2	COMPOSITE BRONZE ANODIZED ALUM.PANEL	CMU-1	BURNISHED CMU VENEER	CJ	DENOTES MASONRY CONTROL JOINT
MP-3	COMPOSITE ALUM. PANEL	CONC	CAST CONCRETE		

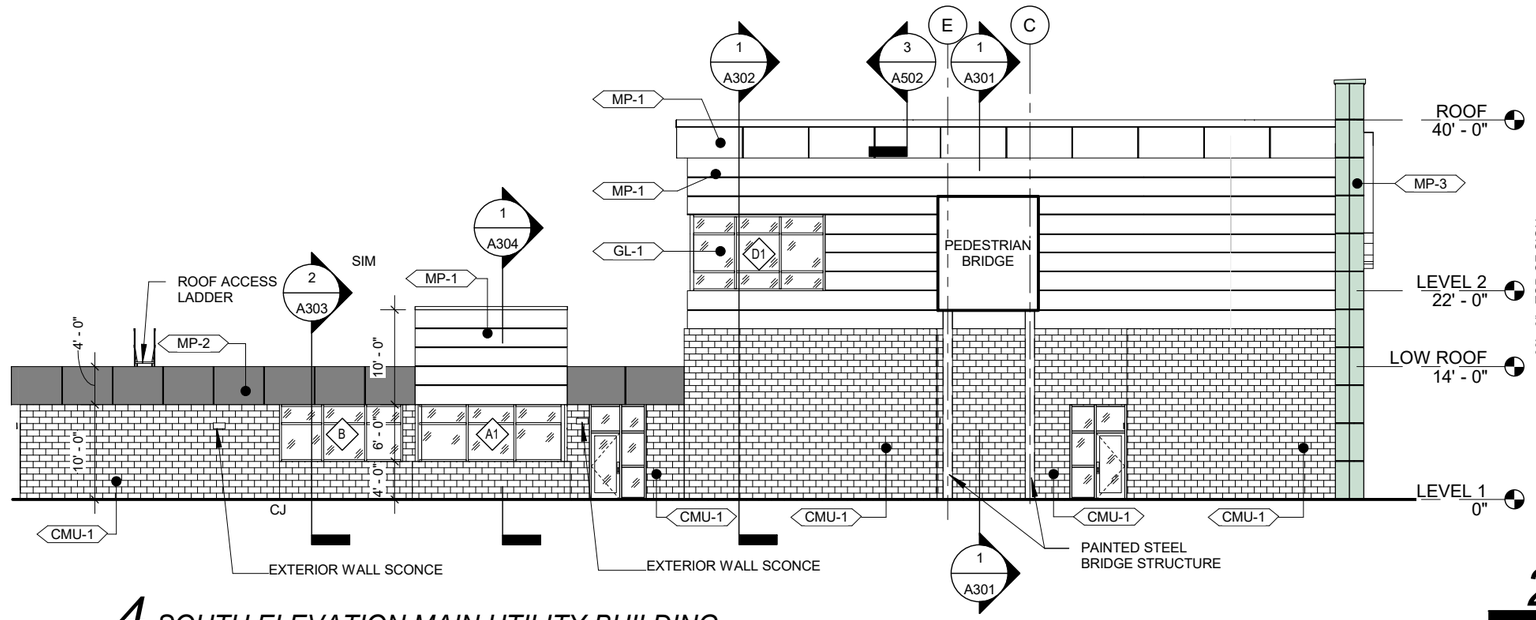

4 SOUTH ELEVATION MAIN UTILITY BUILDING

A202 SCALE: 1/16" = 1'-0"

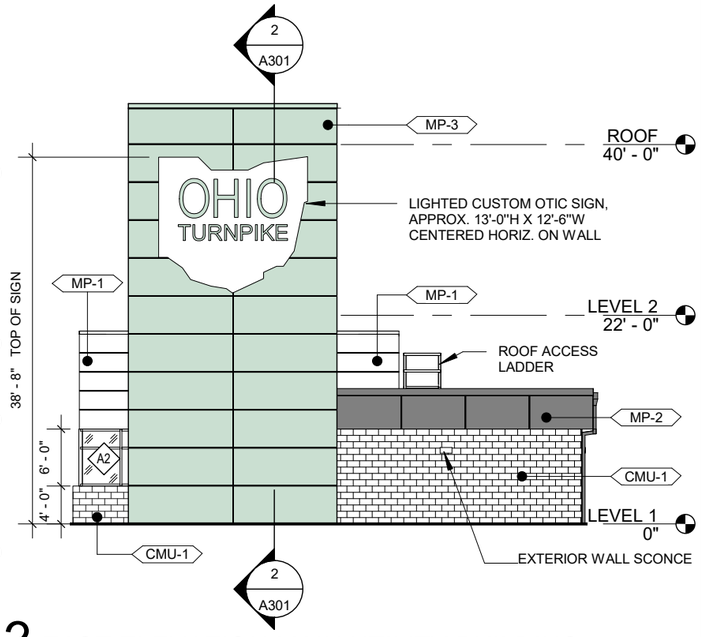

2 EAST ELEVATION MAIN UTILITY BUILDING

A202 SCALE: 1/16" = 1'-0"

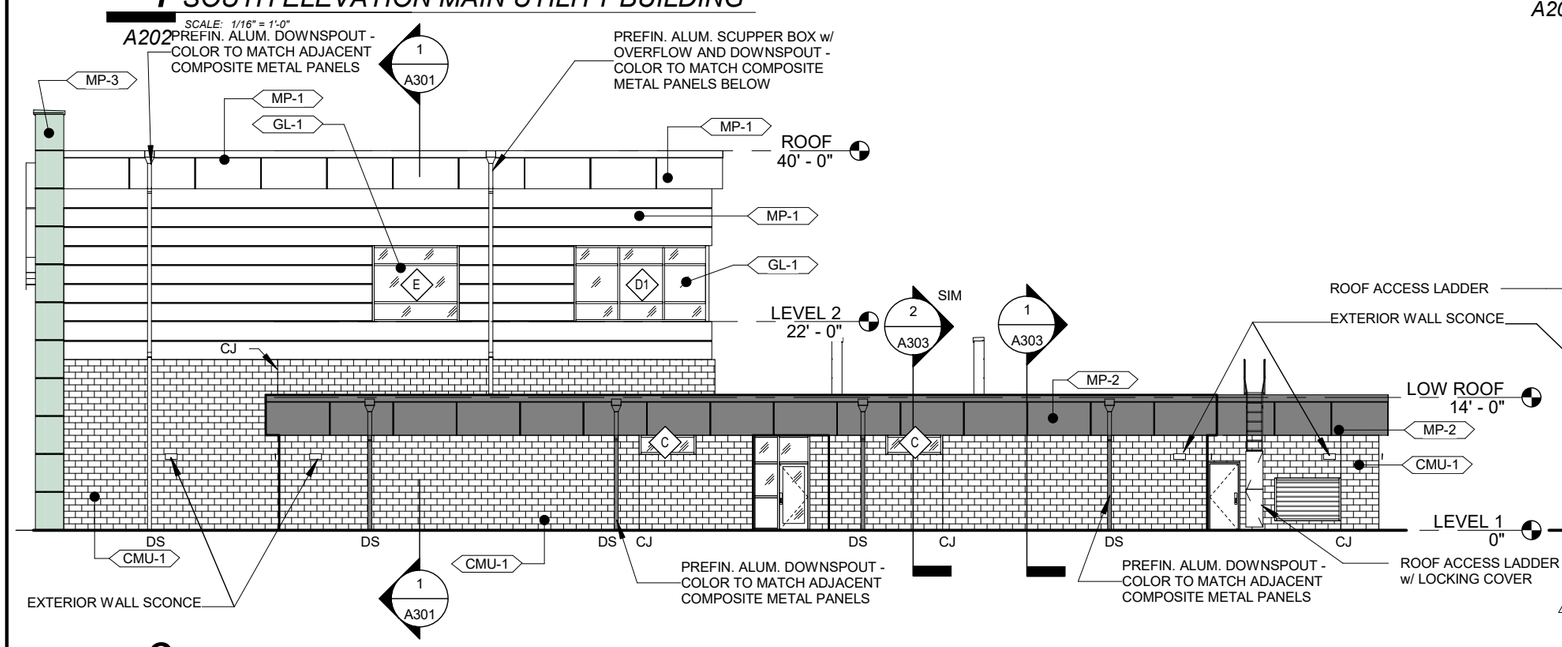

3 NORTH ELEVATION MAIN UTILITY BUILDING

A202 SCALE: 1/16" = 1'-0"

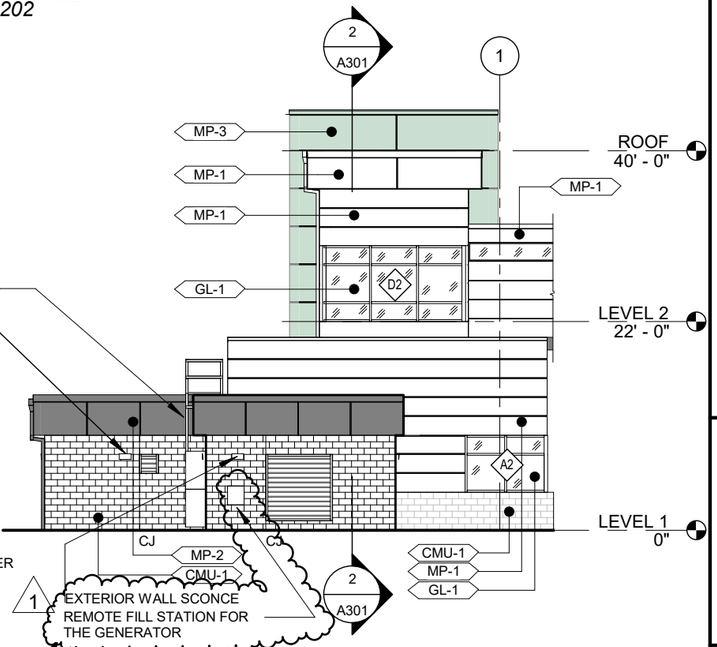

1 WEST ELEVATION MAIN UTILITY BUILDING

A202 SCALE: 1/16" = 1'-0"

COORDINATE ALL FINISH FLOOR ELEVATIONS WITH CIVIL DRAWINGS
ELEVATIONS NOTED ON THIS SHEET USE 0'-0" FOR FIRST FLOOR ELEVATION

GRAPHIC SCALE 0' 16' 32'

DESIGN AGENCY
PRIME AE
540 White Pond Drive, Ste. E
Akron, Ohio 44320
(330)-864-7755

NO.	REVISIONS	BY	DATE
1	ADDENDUM 3		5/15/2020

DESIGNED MWM | DRAWN MAK | CHECKED MWM | IN CHARGE CAR

ELEVATION MAIN BUILDING
TOLL PLAZA 49
LUCAS COUNTY

PROJECT 58-20-01
DATE: 4/10/2020
A202

77 / 202

OHIO TURNPIKE AND INFRASTRUCTURE COMMISSION

5/14/2020 5:39:03 PM
TOLL PLAZA 49

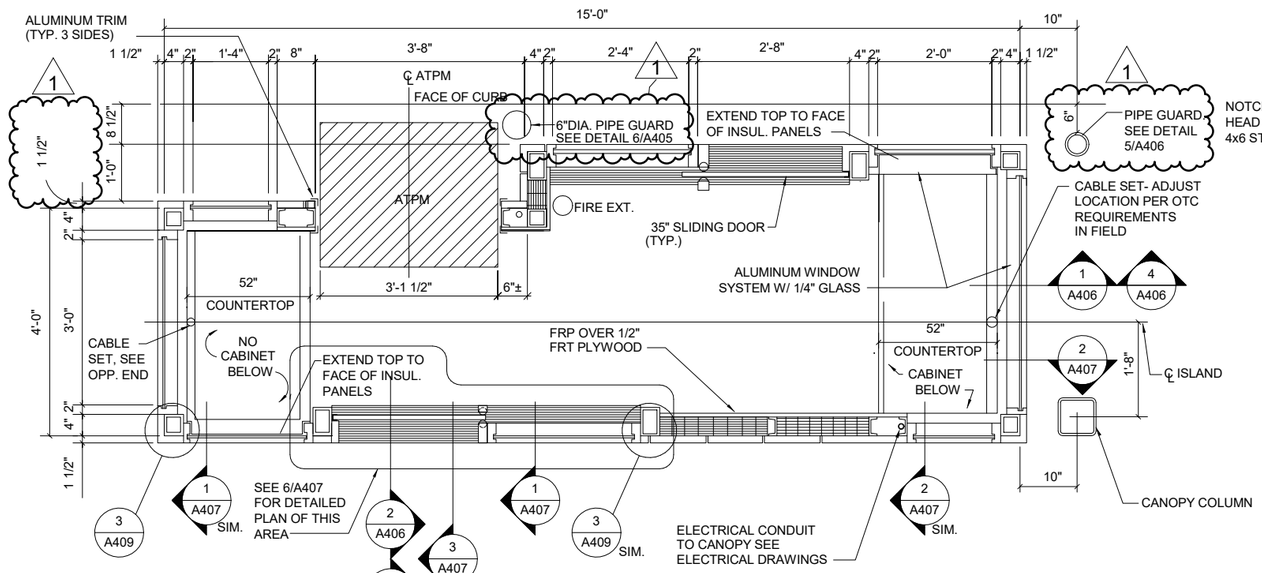

PLAN AT WINDOW LEVEL

SCALE: 3/8" = 1'-0"

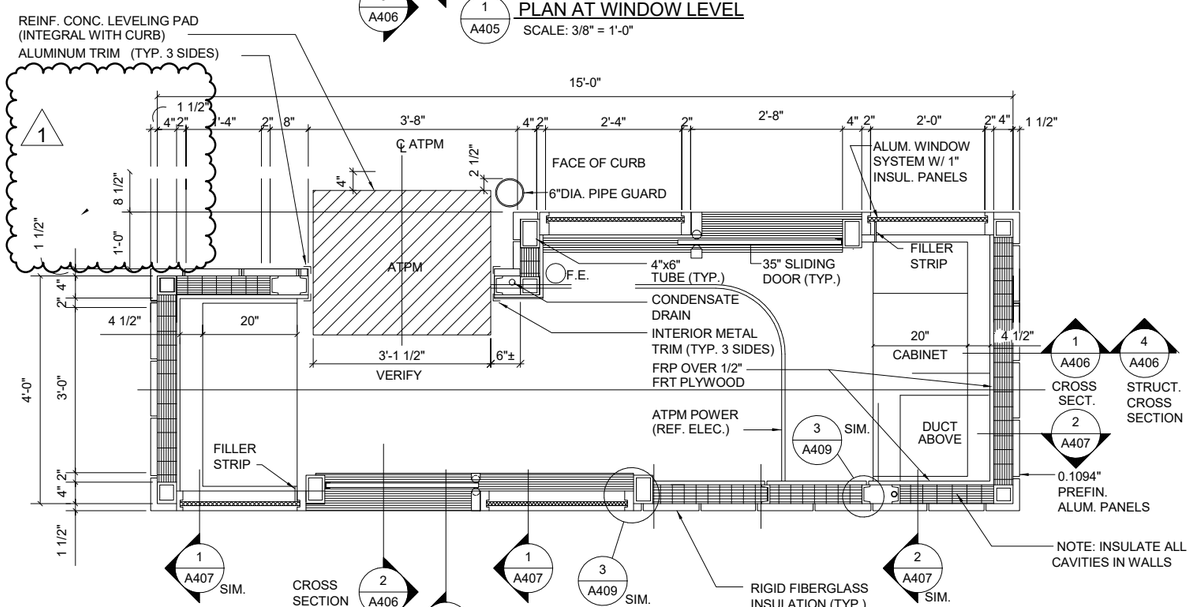

PLAN BELOW WINDOWS

SCALE: 3/4" = 1'-0"

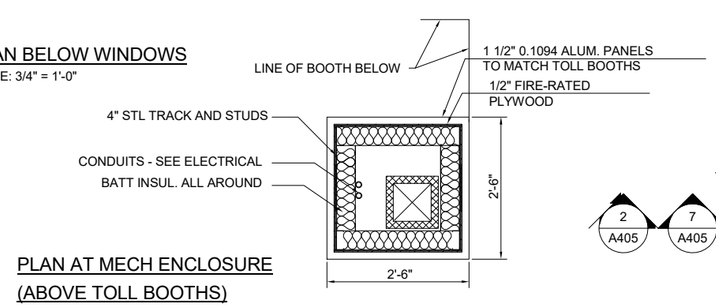

PLAN AT MECH ENCLOSURE (ABOVE TOLL BOOTHS)

NO SCALE

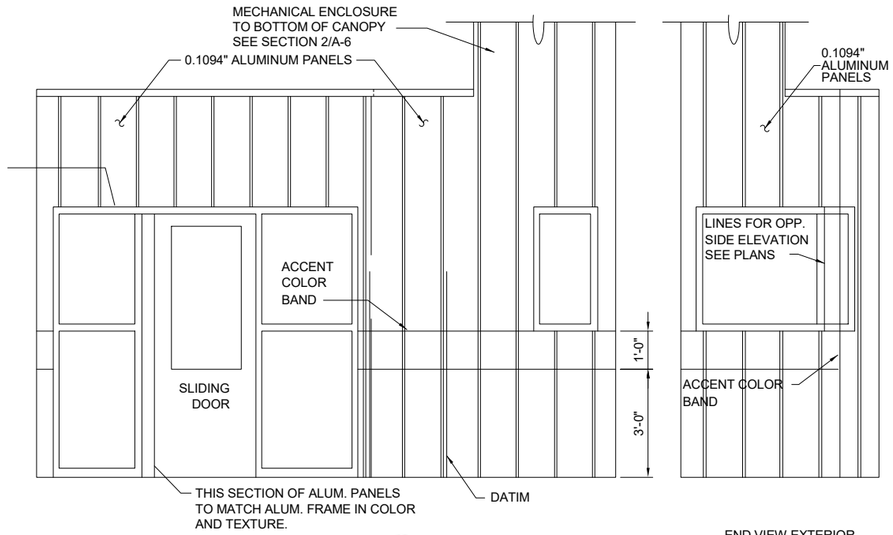

BOOTH ELEVATIONS

SCALE: 3/16" = 1'-0"

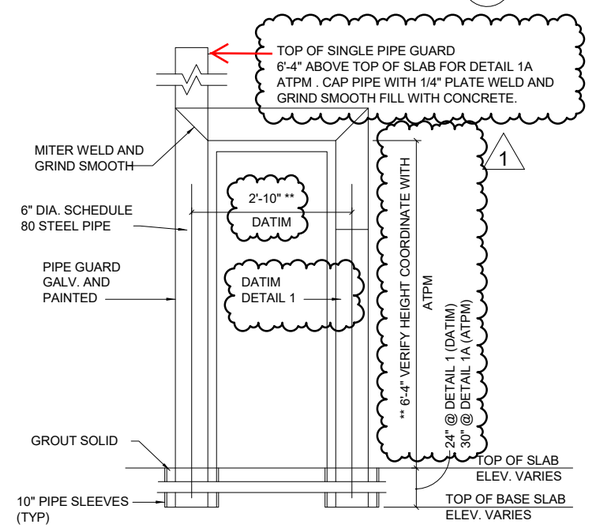

PIPE GUARD ELEVATION

SCALE: 3/4" = 1'-0" @ DATIM

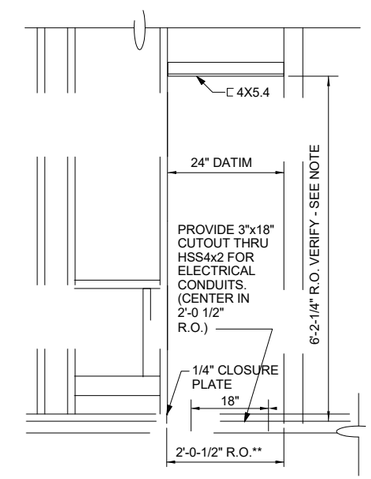

CONDITION AT DATIM

SCALE: 3/4" =1'-0"

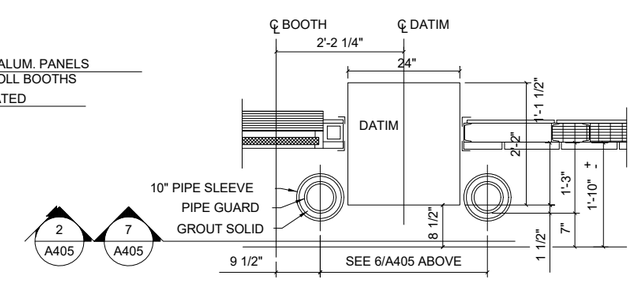

PLAN AT DATIM

SCALE: 3/4" = 1'-0"

** NOTE:
VERIFY ROUGH OPENING SIZE WITH OTC PRIOR TO FABRICATION OF BOOTH FRAMING AND PIPE GUARDS. VARIATIONS IN EQUIPMENT WILL AFFECT NOTED DIMENSIONS.

12" 6" 0 1' 2' 3'
SCALE: 3/4 "=1'-0"

12" 9" 6" 3" 0 1' 2'
SCALE: 1 1/2 "=1'-0"

DESIGN AGENCY
PRIME AE
540 White Pond Drive, Ste. E
Akron, Ohio 44320
(330)-864-7755

NO.	REVISIONS	BY	DATE
1	ADDENDUM 3		5/15/2020

DESIGNED MWM | CHECKED MWM | DRAWN MAK | IN CHARGE CAR

TOLL BOOTH PLAN AND ELEVATIONS

TOLL PLAZA 49 — LUCAS COUNTY

PROJECT 58-20-01
DATE: 4/10/2020

A405

92 / 202

OHIO TURNPIKE AND INFRASTRUCTURE COMMISSION

TOLL PLAZA 49 5/14/2020 5:39:11 PM

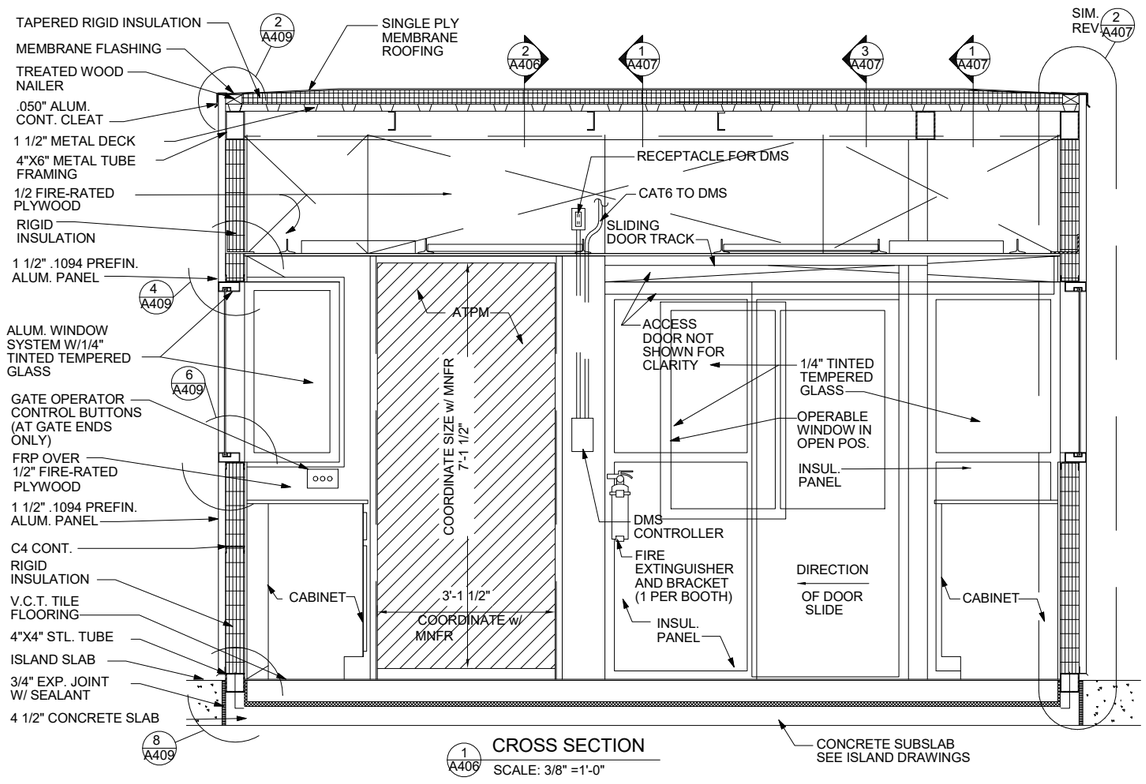

1 A406 CROSS SECTION
SCALE: 3/8" =1'-0"

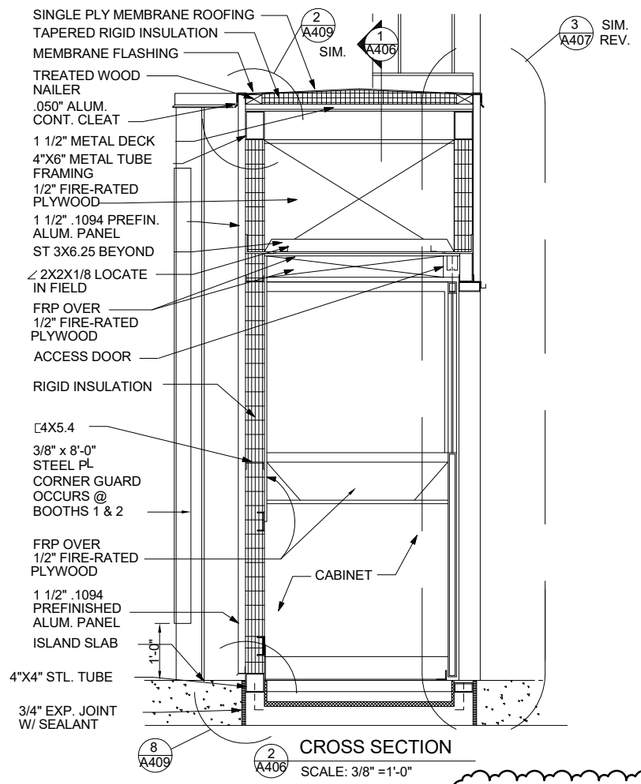

2 A406 CROSS SECTION
SCALE: 3/8" =1'-0"

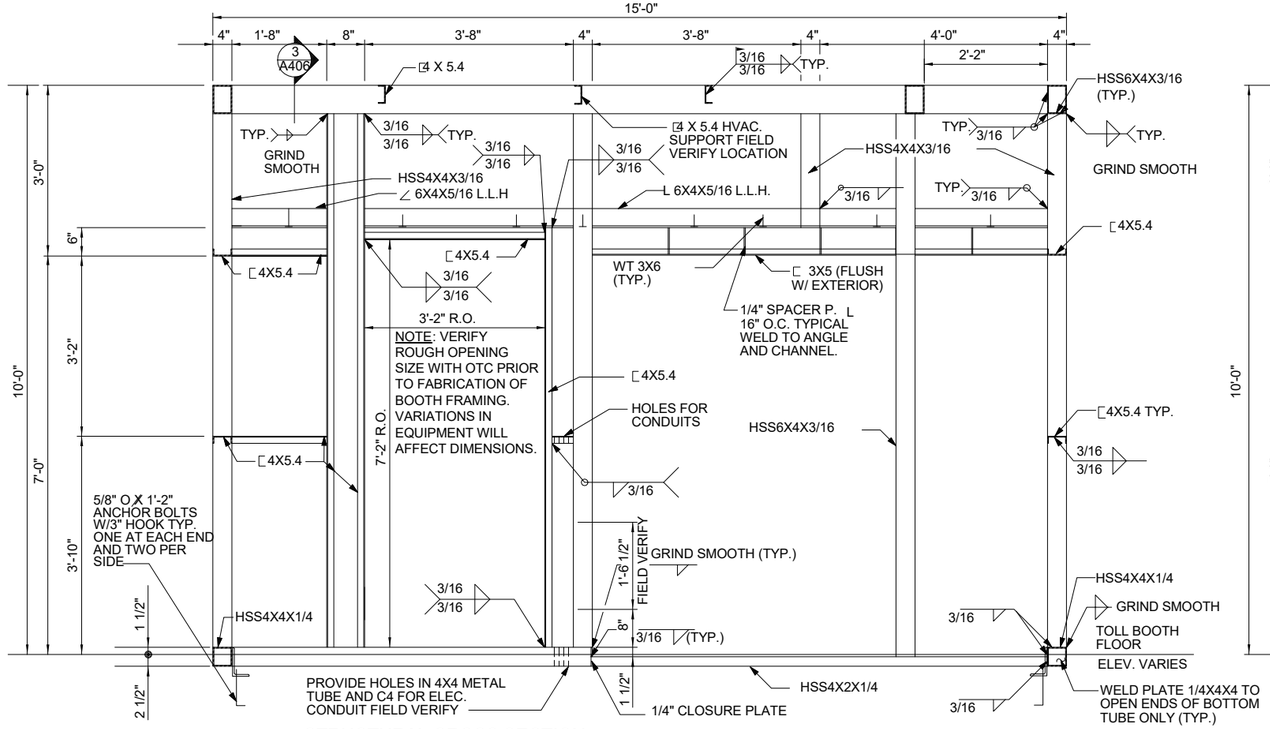

4 A406 STRUCTURAL CROSS SECTION
SCALE: 3/8" =1'-0"

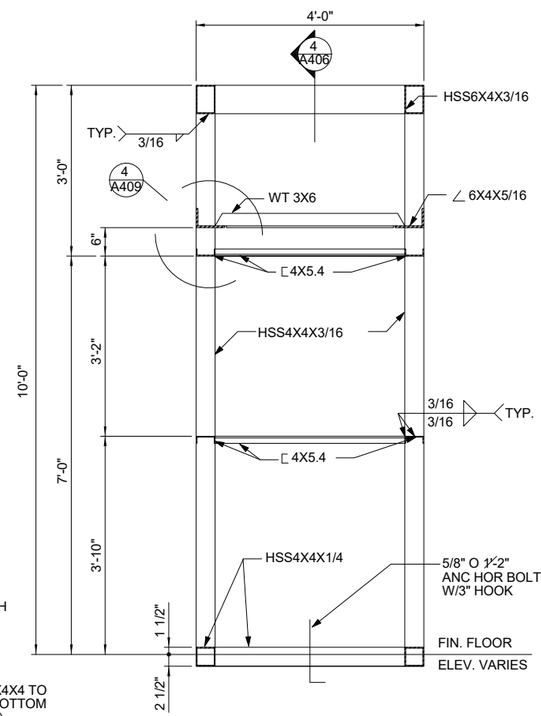

3 A406 STRUCTURAL CROSS SECTION
SCALE: 3/8" =1'-0"

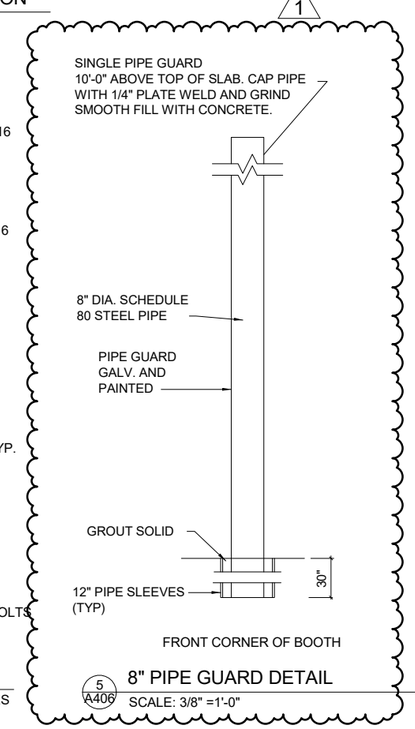

5 A406 8" PIPE GUARD DETAIL
SCALE: 3/8" =1'-0"

12" 6" 0 1' 2' 3'
SCALE: 3/8 "=1'-0"

TOLL PLAZA 49 5/14/2020 5:39:22 PM

DESIGN AGENCY
PRIME AE
540 White Pond Drive, Ste. E
Akron, Ohio 44320
(330)-864-7755

NO.	REVISIONS	BY	DATE
1	ADDENDUM 3		5/15/2020

DESIGNED MWM | CHECKED MWM | IN CHARGE CAR | DRAWN MAK

TOLL BOOTH SECTIONS

TOLL PLAZA 49 LUCAS COUNTY

PROJECT 58-20-01
DATE: 4/10/2020

A406

OHIO TURNPIKE AND INFRASTRUCTURE COMMISSION

OHIO TURNPIKE

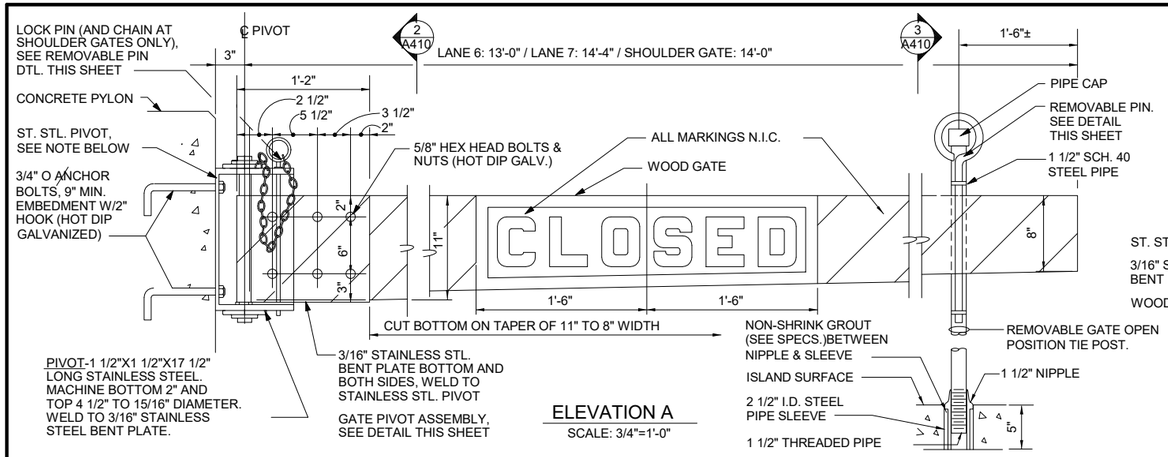

ELEVATION A
SCALE: 3/4"=1'-0"

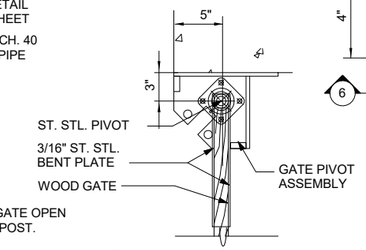

4 A410 SECTION
SCALE: 3/4"=1'-0"

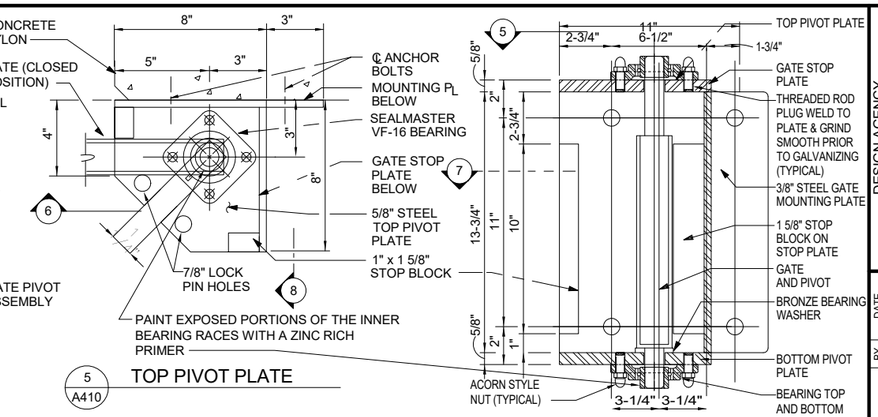

5 A410 TOP PIVOT PLATE

6 A410 MOUNTING PLATE ELEVATION

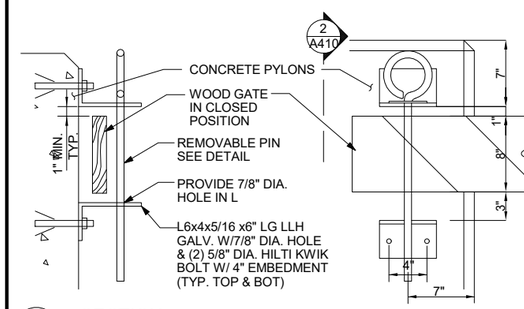

2 A410 SECTION
SCALE: 3/4"=1'-0"

ELEVATION B
SCALE: 3/4"=1'-0"

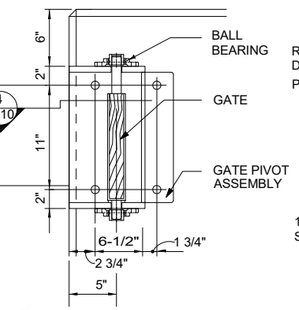

1 A410 SECTION
SCALE: 3/4"=1'-0"

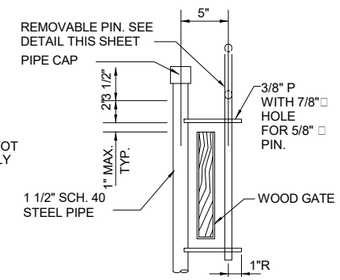

3 A410 SECTION
SCALE: 3/4"=1'-0"

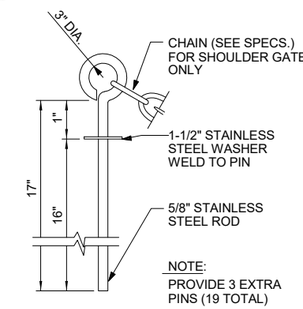

REMOVABLE PIN DETAIL
NOT TO SCALE

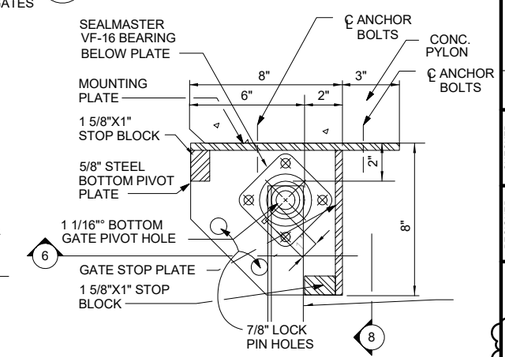

7 A410 BOTTOM PIVOT PLATE

NOTES:

SEE DETAIL THIS SHEET FOR GATE PIVOT ASSEMBLY DETAILS.

TYPICAL ALL GATE HARDWARE-GRIND ALL SHARP CORNERS TO A UNIFORM SMOOTH RADIUS REMOVING ALL SHARP BURRS AND EDGES. NON STAINLESS STEEL PARTS SHALL BE HOT DIP GALVANIZED AFTER FABRICATION, INCLUDING BOLTS.

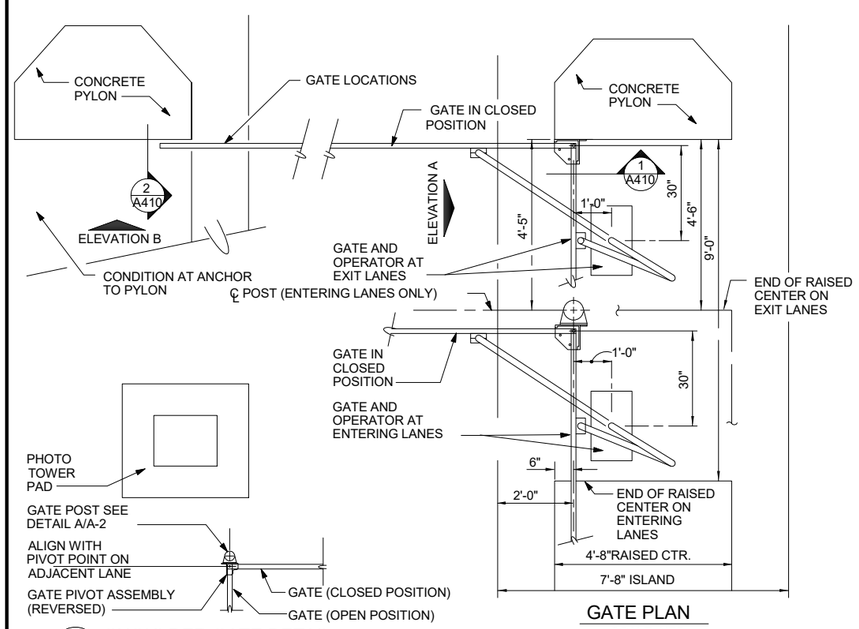

9 A410 SHOULDER GATE DETAIL
SCALE: NTS

GATE PLAN
SCALE: NTS

THIS TOLL BOOTH GATE WILL BE PROVIDIED AND INSTALLED BY THE TCS INTEGRATOR. THE 58-20-01 CONTRACTOR WILL INSTALL ALL INTEGRATOR SUPPLIED ANCHOR BOLTS.

10 A410 SHOULDER GATE MOUNTING POST DETAIL
SCALE: 3/4"=1'-0"

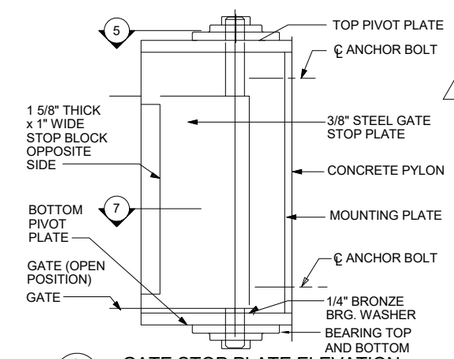

8 A410 GATE STOP PLATE ELEVATION

GATE PIVOT ASSEMBLY DETAILS

1. CONTINUOUS WELD ALL JOINTS, GRIND SMOOTH
2. HOT DIP GALVANIZE AFTER FABRICATION.
3. SHOULDER GATE SHALL RECEIVE MIRROR IMAGE PIVOT ASSEMBLY.
4. EACH PIVOT ASSEMBLY SHALL RECEIVE A REMOVABLE PIN (THE SHOULDER GATE SHALL RECEIVE A CHAIN AND REMOVABLE PIN) AS SHOWN AND SPECIFIED TO BE INSERTED IN THE LOCK PIN HOLES TO SECURE THE GATE IN THE OPEN AND CLOSED POSITIONS.
5. THE SHOULDER GATES MUST HAVE THE PINS INSERTED AT ALL TIMES (IN THE OPEN OR CLOSED POSITION).
6. THE GATES WITH GATE OPERATORS SHALL HAVE LOOSE PINS (STORED IN THE UTILITY BUILDING) TO BE USED ONLY WHEN THE GATE OPERATORS ARE DISCONNECTED.
7. PAINT THE EXPOSED PORTIONS OF THE INNER RACES FOR THE BEARINGS WITH A ZINC RICH PRIMER.

DESIGN AGENCY
PRIME AE
540 White Pond Drive, Ste. E
Akron, Ohio 44320
(330)-864-7755

NO.	REVISIONS	BY	DATE
1	ADDENDUM 2		5/12/2020
2	ADDENDUM 3	MM	5/15/2020

DESIGNED MWM | DRAWN MAK | CHECKED MWM | IN CHARGE CAR

TOLL BOOTH GATE DETAILS FOR INFORMATION ONLY

LUCAS COUNTY

TOLL PLAZA 49

PROJECT 58-20-01
DATE: 4/10/2020

A410

OHIO TURNPIKE AND INFRASTRUCTURE COMMISSION

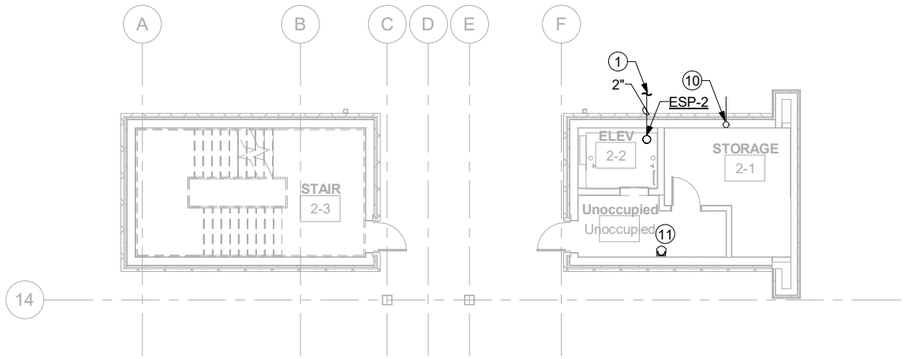

SECONDARY BUILDING BELOW GRADE ENLARGED PLUMBING PLAN

2 / P201

1/16" = 1'-0"

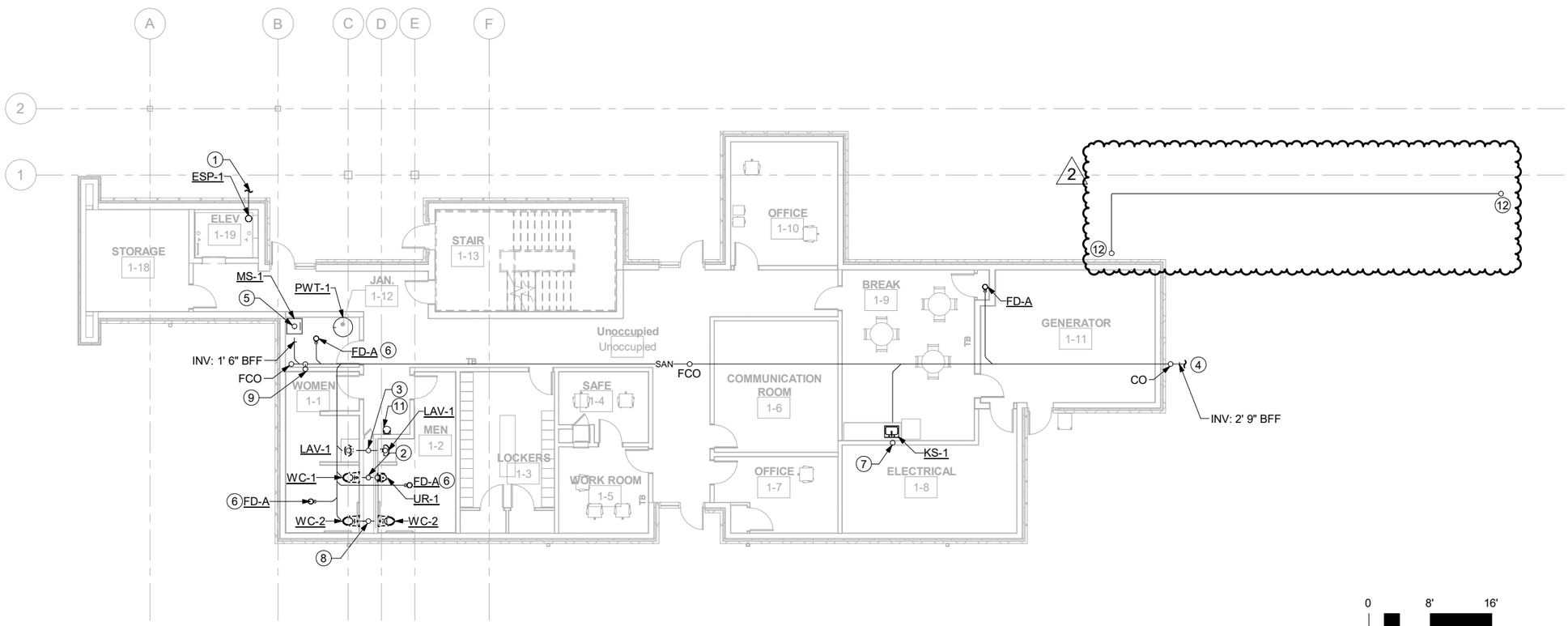

MAIN BUILDING BELOW GRADE ENLARGED PLUMBING PLAN

1 / P201

1/16" = 1'-0"

0 8' 16' 32'

SCALE: 1/16" = 1'-0"

KEYNOTES

1. ELEVATOR SUMP PUMP DISCHARGE BELOW GRADE. SEE CIVIL DWG FOR CONT.
2. 4" SAN UP. BRANCH 4" TO WC, 2" TO URINAL. EXTEND 2" VENT UP.
3. 1 1/2" SAN UP. BRANCH 1 1/2" SAN TO EACH LAVATORY. EXTEND 1 1/2" VENT UP.
4. 4" SANITARY TO LEACH FIELD. SEE CIVIL DWG. FOR CONTINUATION.
5. 3" SAN UP TO MS-1.
6. 3" WASTE UP TO FD-A.
7. 2" SAN UP TO KS-1. EXTEND 1 1/2" VENT UP.
8. 4' SAN UP. BRANCH 4" SAN TO EACH WC. EXTEND 2" VENT UP.
9. 2" VP UP IN WALL.
10. 3/4" CD DISCHARGE TO DAYLIGHT AND UP IN WALL TO AC-4 AND AC-3.
11. BOTTLED COOLER (BY ARCHITECT).
12. 3/4" POLYETHYLENE PROPANE GAS PIPE UP. SEE P202 FOR CONTINUATION. (2)

DESIGN AGENCY
PRIME AE
540 White Pond Drive, Ste. E
Akron, Ohio 44320
(330)-864-7755

NO.	REVISIONS	BY	DATE
1	ADDENDUM No.2	CK	5/12/20
2	ADDENDUM NO. 3	JV	5/13/20

DESIGNED AR | CHECKED JV
DRAWN AR | IN CHARGE JV

FIRST FLOOR BELOW GRADE ENLARGED PLUMBING PLAN

TOLL PLAZA 49 — LUCAS COUNTY

PROJECT 58-20-01
DATE: 05/13/2020

P201

120 / 202

OHIO TURNPIKE AND INFRASTRUCTURE COMMISSION

5/14/2020 12:13:35 PM

Project Name

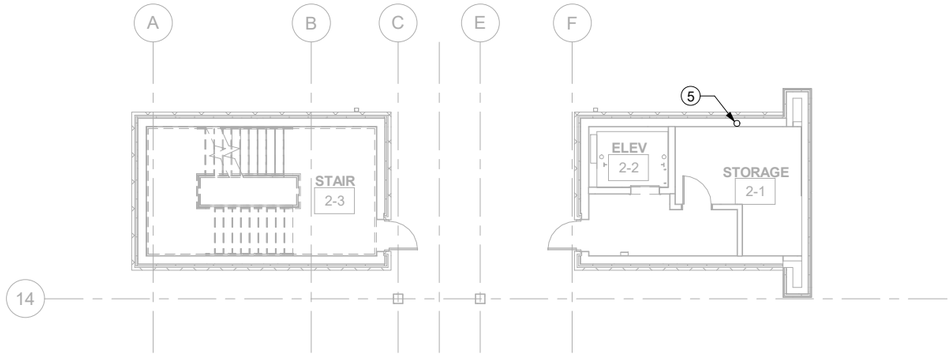

SECONDARY UTILITY BUILDING ABOVE GRADE ENLARGED PLUMBING PLAN

2 / P202

1/16" = 1'-0"

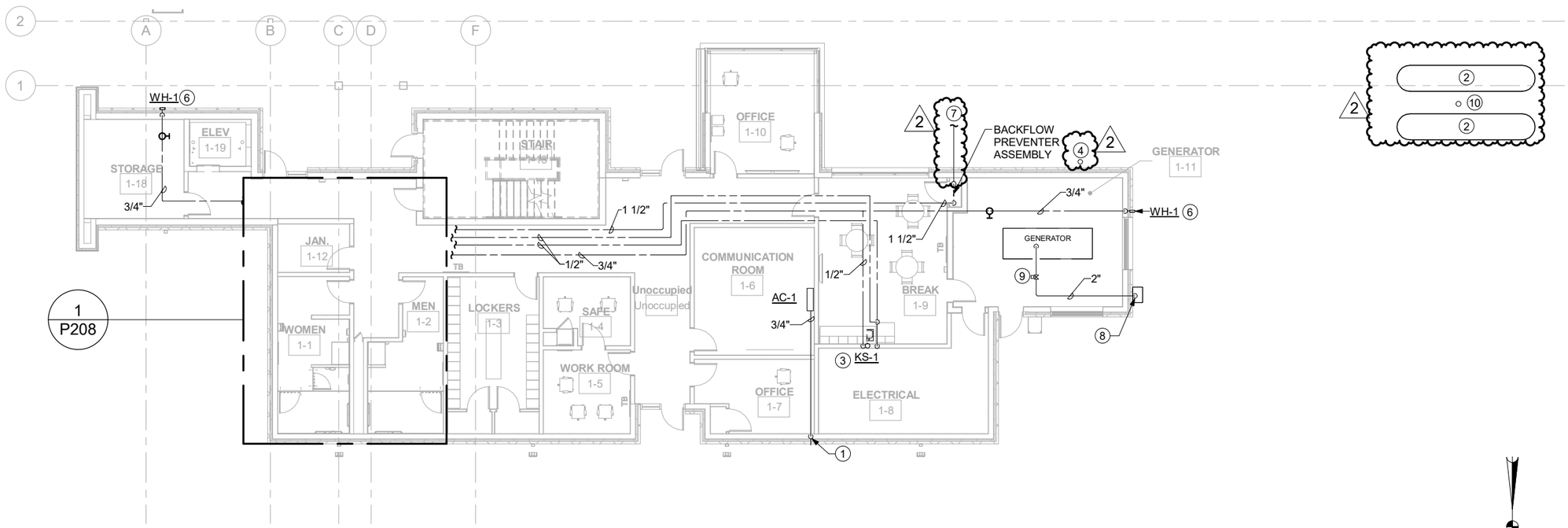

MAIN UTILITY BUILDING ABOVE GRADE ENLARGED PLUMBING PLAN

1 / P202

1/16" = 1'-0"

0 8' 16' 32'

SCALE: 1/16" = 1'-0"

N

(#) KEYNOTES

1. 3/4" CD DOWN IN WALL AND DISCHARGE TO DAYLIGHT
2. TANKS AND FINAL CONNECTIONS PROVIDED BY COMMISSION VENDOR.
3. 1/2" DCW, DHW, 1 1/2" VENT DOWN IN WALL TO KS-1.
4. 3/4" POLYETHYLENE PROPANE GAS PIPE UP TO ROOF AND DOWN BELOW GRADE. SEE P201 AND P203 FOR CONTINUATION.
5. 3/4" CD UP AND DOWN IN WALL. SEE DWG. P201 AND P204 FOR CONTINUATION.
6. 3/4" DCW DOWN IN WALL TO WALL HYDRANT.
7. 2" INCOMING DOMESTIC WATER. SEE CIVIL DWG. FOR CONTINUATION.
8. REMOTE FILL STATION PER GENERATOR MANUFACTURER. SEE ELECTRICAL DRAWINGS.
9. ACTUATED VALVE CLOSES ON HIGH LEVEL
10. 3/4" POLYETHYLENE PROPANE GAS PIPE DOWN BELOW GRADE. STUB 12" ABOVE CONCRETE PAD FOR PROPANE TANK CONNECTION (BY COMMISION VENDOR). SEE P201 FOR CONTINUATION.

DESIGN AGENCY
PRIME AE
540 White Pond Drive, Ste. E
Akron, Ohio 44320
(330)-864-7755

OHIO TURNPIKE

NO.	REVISIONS	BY	DATE
1	ADDENDUM No.2	CK	5/12/20
2	ADDENDUM NO.1	JV	5/13/20

DESIGNED AR | DRAWN AR | CHECKED JV | IN CHARGE JV

FIRST FLOOR ABOVE GRADE ENLARGED PLUMBING PLAN

TOLL PLAZA 49 — LUCAS COUNTY

PROJECT 58-20-01

DATE: 05/13/2020

P202

121 / 202

OHIO TURNPIKE AND INFRASTRUCTURE COMMISSION

5/14/2020 1:29:30 PM

Project Name

KEYNOTES

1 3/4" CD DISCHARGE TO LOWER ROOF. UP IN WALL TO AC-2

2 3/4" POLYETHYLENE PROPANE GAS PIPE DOWN

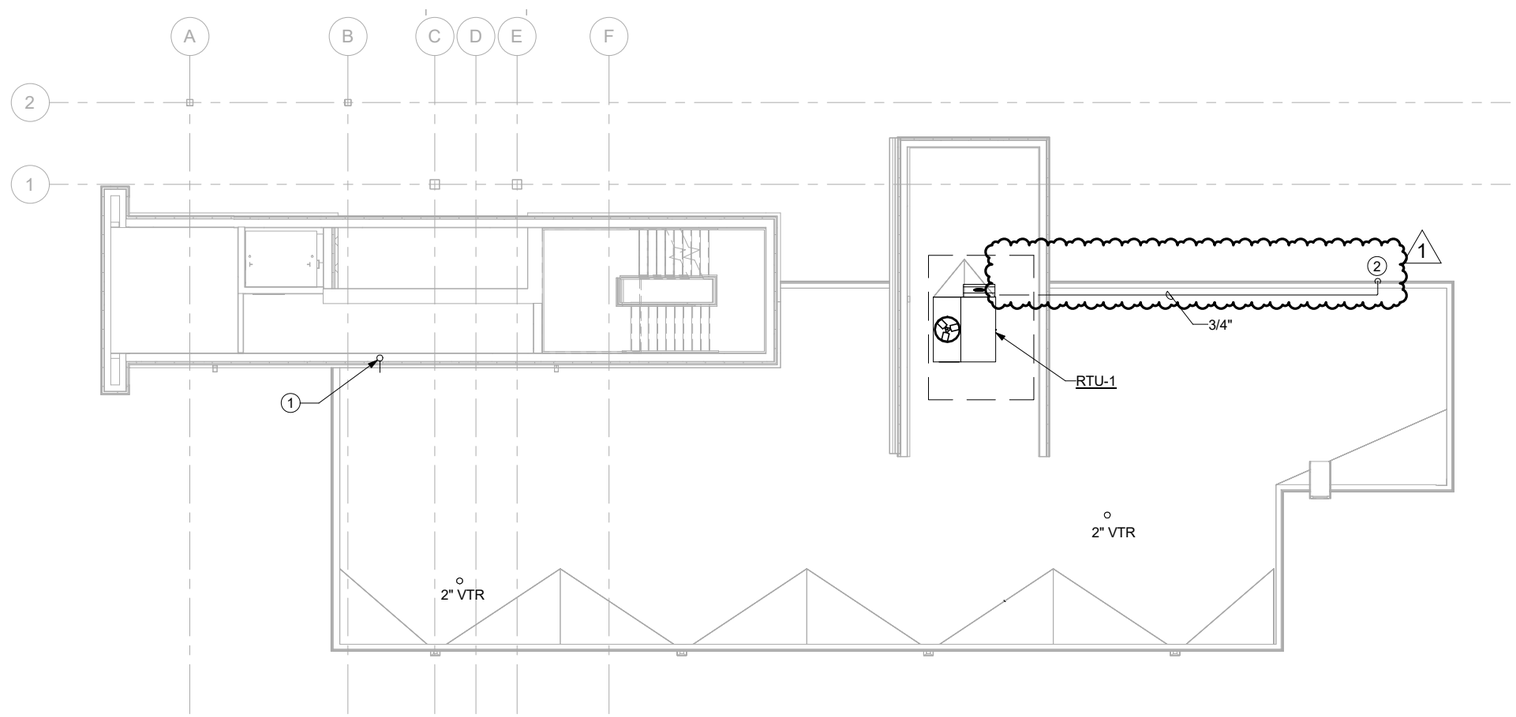

MAIN BUILDING - LOWER ROOF- PLUMBING PLAN

1/16" = 1'-0"

1 P203

0 8' 16' 32'

SCALE: 1/16" = 1'-0"

N

5/14/2020 12:13:37 PM

Project Name

DESIGN AGENCY

PRIME AE

540 White Pond Drive, Ste. E
Akron, Ohio 44320
(330)-864-7755

OHIO TURNPIKE

NO.	REVISIONS	BY	DATE
1	ADDENDUM NO.1	JV	5/13/20

DESIGNED AR
DRAWN AR
CHECKED JV
IN CHARGE JV

MAIN BUILDING - LOWER ROOF- PLUMBING PLAN

TOLL PLAZA 49

LUCAS COUNTY

PROJECT 58-20-01
DATE: 05/13/2020

P203

122
202

OHIO TURNPIKE AND INFRASTRUCTURE COMMISSION

OHIO TURNPIKE

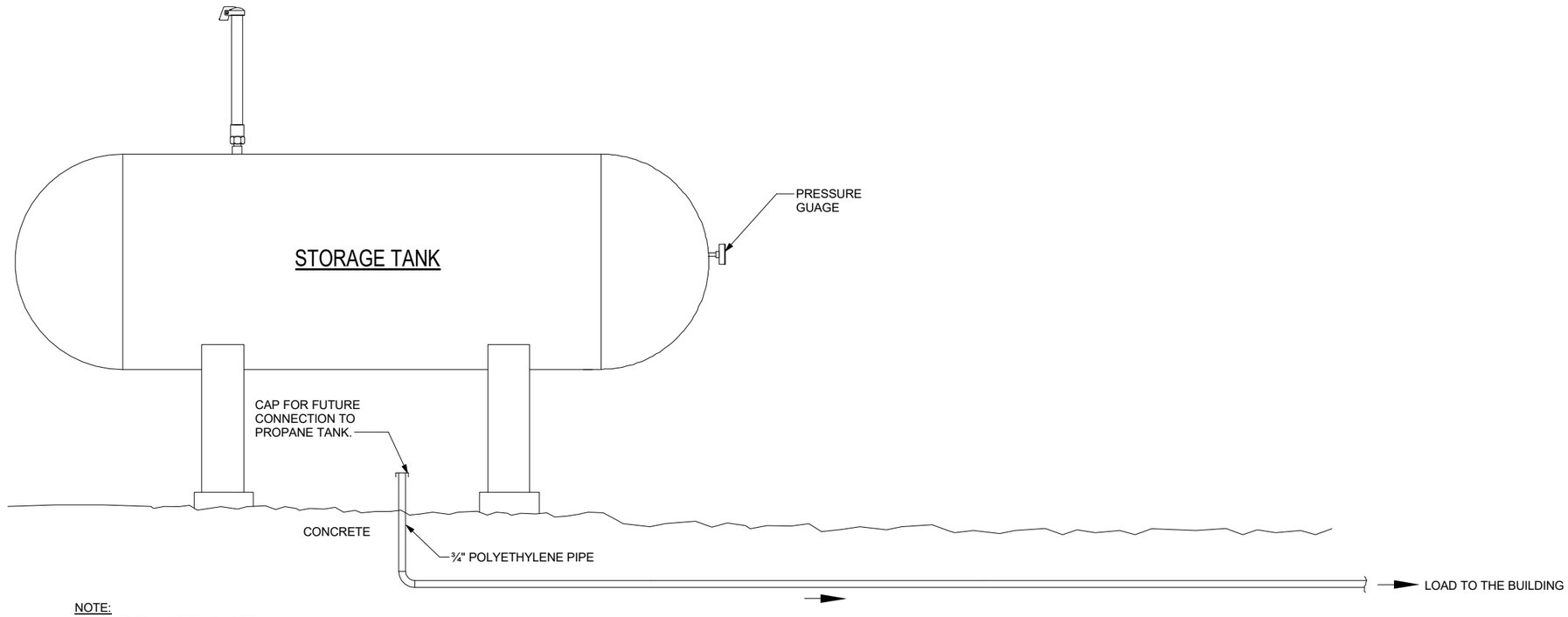

NOTE:
1. USE PROPANE TRENCH DETAIL ON SHEET C119 FOR INSTALLING THE PIPE UNDERGROUND.

PROPANE TANK

NTS

1 / P403

Project Name 5/14/2020 1:29:30 PM

DESIGNED AR | CHECKED JV | NO. | REVISIONS | BY | DATE
DRAWN AR | IN CHARGE JV | 1 | ADDENDUM NO.1 | JV | 5/13/20

DESIGN AGENCY
PRIME AE
540 White Pond Drive, Ste. E
Akron, Ohio 44320
(330)-864-7755

OHIO TURNPIKE

PLUMBING DETAILS

LUCAS COUNTY

TOLL PLAZA 49

PROJECT 58-20-01
DATE: 05/13/2020

P403

131 / 202

OHIO TURNPIKE AND INFRASTRUCTURE COMMISSION

GENERAL NOTES

1. ALL MECHANICAL EQUIPMENT LOCATIONS SHOWN ARE APPROXIMATE. SEE MECHANICAL PLANS FOR EXACT LOCATIONS OF EQUIPMENT. ALL FUSING SHALL BE BASED ON FINAL NAMEPLATE VALUES AS DELIVERED TO THE JOB SITE.
2. COORDINATE ALL WIRING DEVICES AND LIGHT FIXTURE LOCATIONS WITH ARCHITECTURAL ELEVATIONS, REFLECTED CEILING PLANS & MECHANICAL EQUIPMENT. LOCATIONS SHOWN ARE APPROXIMATE AND MAY REQUIRE MINOR ADJUSTMENT IN THE FIELD TO SATISFY THEDESIGN INTENT.
3. ALL MOUNTED HEIGHTS INDICATED ARE ABOVE FINISHED FLOOR U.O.N.
4. ALL CONDUIT FOR TELEPHONE, RADIO & COMPUTER SYSTEMS SHALL BE 1" UNLESS OTHERWISE NOTED EACH CABLE RUN FROM A RADIO TELEPHONE OR SPEAKER OUTLET LOCATION TO THE RECORDING ROOM SHALL BE IN A SEPARATE CONDUIT. COORDINATE ALL NEW CONDUIT RUNS WITH ALL OTHER TRADES AND COMMUNICATIONS CONTRACTOR.
5. DAMAGE TO EXISTING FACILITIES (UNDERGROUND PIPING, CONDUIT, SIDEWALKS PARKING LOT, ETC) WILL BE REPAIRED BY THE CONTRACTOR AT NO EXPENSE TO OHIO TURNPIKE AND INFRASTRUCTURE COMMISSION.
6. TELEPHONE CABLE INSTALLATION: THE CONTRACTOR SHALL BE RESPONSIBLE FOR THE INSTALLATION OF ALL TELEPHONE CABLES AND RELATED HARDWARE.
7. ANY TEMPORARY ELECTRICAL SERVICE SHALL MEET THE REQUIREMENTS OF THE NATIONAL ELECTRICAL CODE.
8. DO NOT SCALE OFF THESE DRAWINGS. THE LOCATIONS SHOWN ON THESE PLANS ARE APPROXIMATE AND REQUIRE COORDINATION WITH ALL OTHER TRADES AND VERIFICATION OF EXISTING CONDITIONS. ROUTING OF CONDUIT IS DIAGRAMMATIC IN NATURE AND NOT INTENDED TO SHOW ALL REQUIRED OFFSETS AND DETAILS.
9. ALL FLOOR PENETRATIONS AND FIRE WALL PENETRATIONS SHALL BE FIRE-SEALED WITH METHODS AND MATERIALS APPROVED BY U.L. FOR PARTICULAR SYSTEM, OF FIRE-RESISTANCE USED.
10. METAL FASCIA SHALL BE BONDED AND GROUPED TO COMPLY WITH THE OHIO BUILDING CODE.
11. ALL ELECTRICAL WORK SHALL COMPLY WITH THE REQUIREMENTS OF ARTICLE 27 OF THE OHIO BUILDING CODE, AND THE NEC-NFPA 70 AND IS SUBJECT TO THE APPROVAL OF THE STATE ELECTRICAL INSPECTOR ASSIGNED BY THE DIVISION OF FACTORY AND BUILDING INSPECTION.
15. ALL EXPOSED EXTERIOR PULL AND JUNCATION BOXES SHALL BE STAINLESS STEEL OR NON-METALLIC.
16. THE TCS INTEGRATOR WILL MAKE THE FINAL CONNECTIONS TO ALL TCS EQUIPMENT. 2
17. ALL ELECTRIC WORK IS INCLUDED IN THIS CONTRACT.

LIGHTING LEGEND

	LED LIGHTING - SEE SHEET E-126 FOR LIGHTING FIXTURE SCHEDULE. 1	
	EMERGENCY BATTERY TYPE LIGHTING FIXTURE, WALL MOUNT AT 7'-6" A.F.F. UNLESS NOTED OTHERWISE.	
$	FLUSH MTD SINGLE POLE TOGGLE SWITCH	48"
$3	FLUSH MTD 3-WAY TOGGLE SWITCH	48"
PC	PHOTO CELL	
LC	LIGHTING CONTRACTOR	
	EXIT SIGN, 'X1' CEILING MOUNTED, AT 7'-6" A.F.F. OR 'X' (WALL MOUNTED) AT 7'-6" A.F.F.	
	EXIT SIGN, AS ABOVE WITH DIRECTIONAL ARROWS.	
$R	WALL CONTROL SWITCH FOR REMOTE SENSORS	
OS1	SUSPENDED CEILING MOUNTED OCCUPANCY SENSOR	
OS2	OPEN CEILING MOUNTED OCCUPANCY SENSOR	

ELECTRICAL ABBREVIATIONS

ACU	AIR CONDITIONING UNIT	GLS	GATE LIMIT SWITCH
ACCU	AIR COOLED CONDENSING UNIT	LP	LIGHTING PANEL
ACT	AUTMATIC COUNTING TREADLE	MDP	MAIN DISTRIBUTION PANEL
AFF	ABOVE FINSHED FLOOR	MH	MOUNTING HEIGHT
AL	AXLE LIGHT	MT	MOUNT
ATD	AUTOMATIC TICKET DISPENSER	MTG	MOUNTING
ATS	AUTOMATIC TRANSFER SWITCH	NB	NORTH BUILDING
AWS	AXLE WEIGHTING SCALE	P	POWER FOR TOLL COLLECTION EQUIPMENT
BP	BY-PASS ISOLATION	PNL	PANEL
CKT	CIRCUIT	RL	RAIN LEADER
CP	COMMUNICATIONS PANEL	SA	SUPPLY AIR
DWG	DRAWING	SB	SOUTH BUILDING
EC	EMPTY CONDUIT	TC	TOLL COLLECTION CONDUIT (EMPTY)
EF	EXHAUST FAN	TTB	TELEPHONE TERMINAL BOARD
EWC	ELECTRIC WATER COOLER	UON	UNLESS OTHERWISE NOTED
FAA	FIRE ALARM ANNUNCIATOR	WP	WEATHERPROOF
HOA	HAND-OFF-AUTOMATIC	XFMR	TRANSFORMER
		SPD	SURGE PROTECTION DEVICE

FIRE ALARM LEGEND

DSD	DUCT SMOKE DETECTOR AND SAMPLE TUBE.
SD	SMOKE DETECTOR
HD	HEAT DETECTOR
RI	LED REMOTE INDICATOR
F	HORN/STROBE UNIT. MOUNT AT 80" ABOVE FLOOR OR 6" BELOW CEILING, WHICHEVER IS LOWER UNLESS NOTED OTHERWISE. 75 CANDELA UNLESS NOTED OTHERWISE. "LD" INDICATES LOW DECIBEL. RECESSED.
F	STROBE ONLY UNIT. MOUNT AT 80" ABOVE FLOOR OR 6" BELOW CEILING WHICHEVER IS LOWER UNLESS NOTED OTHERWISE. 75 CANDELA UNLESS NOTED OTHERWISE. RECESSED.
R	ADDRESSABLE RELAY
F	HORN/STROBE UNIT. SURFACE CEILING MOUNTED. 115 CANDELA.
F	FIRE ALARM MANUAL PULL STATION
K	RECESSED "KNOX" BOX
RAP	REMOTE ANNUNCIATOR PANEL WITH KEYED FACP RESET. RECESSED. (DUCT SMOKE DETECTORS SHALL BE ABLE TO BE RESET FROM "RAP").
FACP	FIRE ALARM CONTROL PANEL
FATC	FIRE ALARM TERMINAL CABINET
F	RED FIRE ALARM BEACON
M	MASTER BOX
FR	FAN RELAY

ELECTRICAL LEGEND

SYMBOL	DESCRIPTION	MOUNTING HEIGHT
PB	1 PULL BOX	
WP GF	DUPLEX RECEPTACLE 20A, 125V. - 'WP' INDICATES WEATHER PROOF; GF INDICATES GROUND FAULT INTERRUPTER TYPE.	
GFI	GROUND FAULT INTERRUPTER TYPE DUPLEX RECEPTACLE 20A, 125V. 'AC' INDICATES MOUNTED 'ABOVE COUNTER'.	45"
W	TELECOMMUNICATIONS OUTLET WITH 1" EMPTY CONDUIT TO TELECOMMUNICATIONS EQUIPMENT.	18"/48"
	MICROWAVE TELEPHONE OUTLET	48"
W	RADIO TELEPHONE OUTLET	48"
R	WALL OUTLET FOR RADIO SYSTEM SPEAKER	7'-6"
	PUSHBUTTON FOR DOORBELL	48"
	MOTOR CONNECTION REFER TO MECH. DWG'S FOR DETAILS	
	DISCONNECT SWITCH-FUSED TYPE, AND NON-FUSED TYPE, AS NOTED.	48"
	PANELBOARD SURAFCE MOUNTED & RECESSED	6'-6" TO TOP
	COMMUNICATIONS EQUIPMENT BACKBOARD	
	CONDUIT IN OR ABOVE CEILING OR WALL (NO. OF TICKS INDICATE NO. OF CONDUCTORS 2#12+1#12 GRD. IN 3/4" CONDUIT, UNLESS OTHERWISE NOTED	
	HOMERUN TO PANEL, ARROW INDICATES NO. OF CIRCUITS (NO. OF TICKS INDICATE NO. OF CONDUCTORS 2#12+1#12 GRD. IN 3/4" CONDUIT, UNLESS OTHERWISE NOTED	
SPD	SURGE PROTECTION DEVICE	
	CONDUIT IN OR UNDER FLOOR	
E	UNDERGROUND ELEC CONDUIT/DUCTBANK	
C	UNDERGROUND COMMUNICATIONS CONDUIT/DUCTBANK	
	CLOCK RECEPTACLE	7'-0"
C	COMPUTER SYSTEM OUTLET (PROVIDE BLANK COVER PLATE)	18"
T	THERMOSTAT (BY MECHANICAL)	
	DOORBELL	
J	JUNCTION BOX	
PC	PHOTO-CELL	
2	SEE DRAWING NOTE OF SAME NUMBER	
S S	MAGNETIC MOTOR STARTER-COMBINATION DISCONNECT TYPE	48"
	20AMP-(125VOLT SURGE SUPPRESSING TYPE) DUPLEX RECEPTACLE	18"
$M	MANUAL MOTOR STARTER WITH INTEGRAL THERMAL OVERLOAD PROTECTION ('P' INDICATES WITH "PILOT LIGHT")	48" (IF WALL MTD)
	GROUNDING ELECTRODE	
	GROUNDING ELECTRODE TRIAD	
	GROUND TEST WELL (SEE DETAIL	
	SPECIAL PURPOSE OUTLET AS NOTED ON DRAWINGS	

DESIGN AGENCY
PRIME AE
540 White Pond Drive, Ste. E
Akron, Ohio 44320
(330)-864-7755

NO.	REVISIONS	BY	DATE
1	ADDENDUM No.2	CK	5/12/20
2	ADDENDUM No.3	CK	5/15/20

DESIGNED	CHECKED
RNS	CEK
DRAWN	IN CHARGE
RNS	CEK

LUCAS COUNTY

ELECTRICAL LEGEND

TOLL PLAZA 49

PROJECT 58-20-01
DATE: 05/15/2020

E101

151
202

OHIO TURNPIKE AND INFRASTRUCTURE COMMISSION

5/15/2020 8:24:13 AM

Project Name

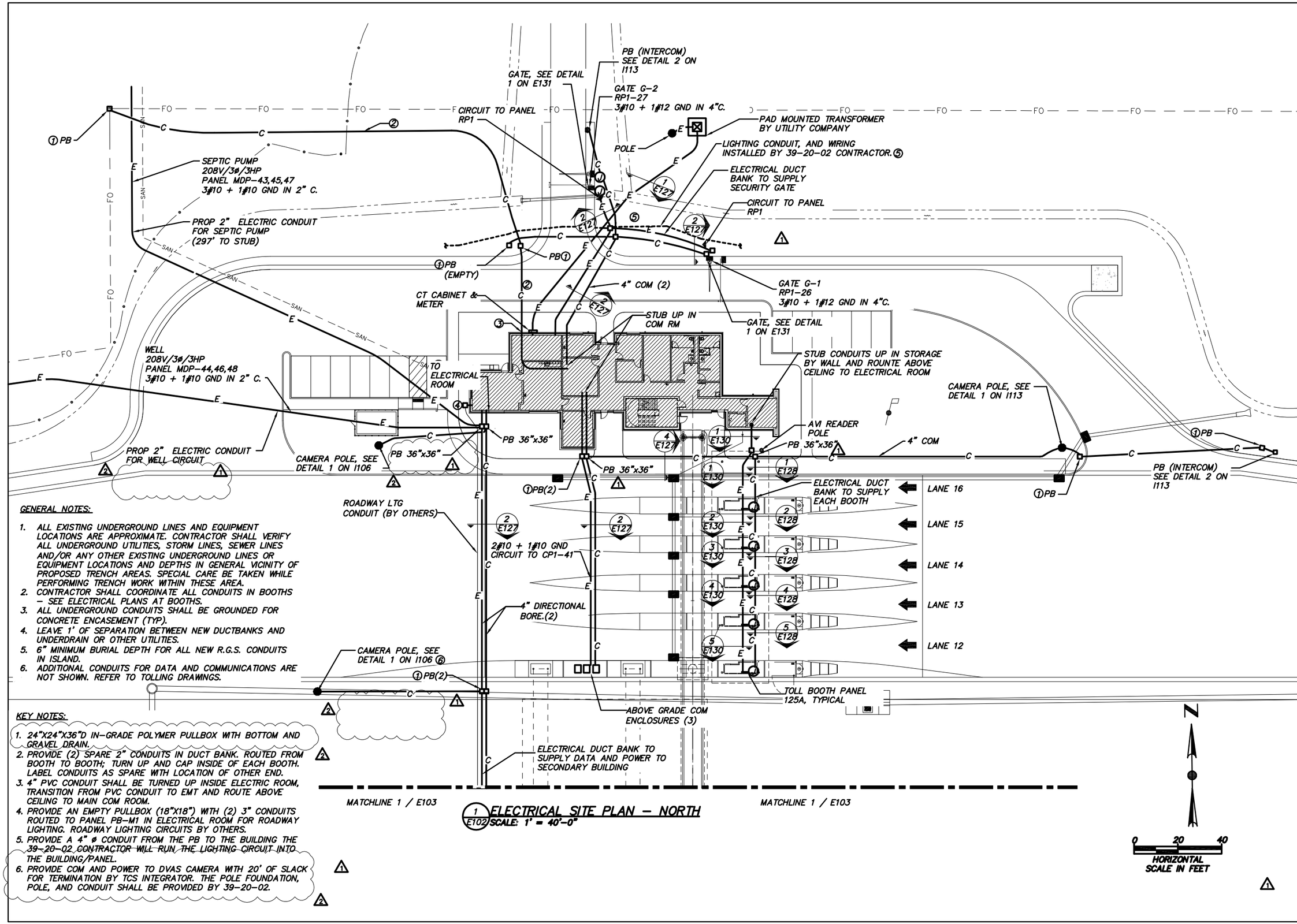

GENERAL NOTES:

1. ALL EXISTING UNDERGROUND LINES AND EQUIPMENT LOCATIONS ARE APPROXIMATE. CONTRACTOR SHALL VERIFY ALL UNDERGROUND UTILITIES, STORM LINES, SEWER LINES AND/OR ANY OTHER EXISTING UNDERGROUND LINES OR EQUIPMENT LOCATIONS AND DEPTHS IN GENERAL VICINITY OF PROPOSED TRENCH AREAS. SPECIAL CARE BE TAKEN WHILE PERFORMING TRENCH WORK WITHIN THESE AREA.
2. CONTRACTOR SHALL COORDINATE ALL CONDUITS IN BOOTHS – SEE ELECTRICAL PLANS AT BOOTHS.
3. ALL UNDERGROUND CONDUITS SHALL BE GROUNDED FOR CONCRETE ENCASEMENT (TYP).
4. LEAVE 1' OF SEPARATION BETWEEN NEW DUCTBANKS AND UNDERDRAIN OR OTHER UTILITIES.
5. 6" MINIMUM BURIAL DEPTH FOR ALL NEW R.G.S. CONDUITS IN ISLAND.
6. ADDITIONAL CONDUITS FOR DATA AND COMMUNICATIONS ARE NOT SHOWN. REFER TO TOLLING DRAWINGS.

KEY NOTES:

1. 24"X24"X36"D IN-GRADE POLYMER PULLBOX WITH BOTTOM AND GRAVEL DRAIN.
2. PROVIDE (2) SPARE 2" CONDUITS IN DUCT BANK. ROUTED FROM BOOTH TO BOOTH; TURN UP AND CAP INSIDE OF EACH BOOTH. LABEL CONDUITS AS SPARE WITH LOCATION OF OTHER END.
3. 4" PVC CONDUIT SHALL BE TURNED UP INSIDE ELECTRIC ROOM, TRANSITION FROM PVC CONDUIT TO EMT AND ROUTE ABOVE CEILING TO MAIN COM ROOM.
4. PROVIDE AN EMPTY PULLBOX (18"X18") WITH (2) 3" CONDUITS ROUTED TO PANEL PB-M1 IN ELECTRICAL ROOM FOR ROADWAY LIGHTING. ROADWAY LIGHTING CIRCUITS BY OTHERS.
5. PROVIDE A 4" ø CONDUIT FROM THE PB TO THE BUILDING THE 39-20-02 CONTRACTOR WILL RUN THE LIGHTING CIRCUIT INTO THE BUILDING/PANEL.
6. PROVIDE COM AND POWER TO DVAS CAMERA WITH 20' OF SLACK FOR TERMINATION BY TCS INTEGRATOR. THE POLE FOUNDATION, POLE, AND CONDUIT SHALL BE PROVIDED BY 39-20-02.

1 / E102 ELECTRICAL SITE PLAN – NORTH
SCALE: 1' = 40'-0"

DESIGN AGENCY
PRIME EV
540 White Pond Drive, Ste. E
Akron, Ohio 44320
(330)-864-7755

NO.	REVISIONS	BY	DATE
1	ADDENDUM No. 2	CK	5/12/20
2	ADDENDUM No. 3	CK	5/15/20

DESIGNED RNS
DRAWN RNS
CHECKED CEK
IN CHARGE CEK

ELECTRICAL SITE PLAN – NORTH
LUCAS COUNTY
TOLL PLAZA 49

PROJECT 58-20-01
DATE: 04/22/2020

E102

152
202

OHIO TURNPIKE AND INFRASTRUCTURE COMMISSION

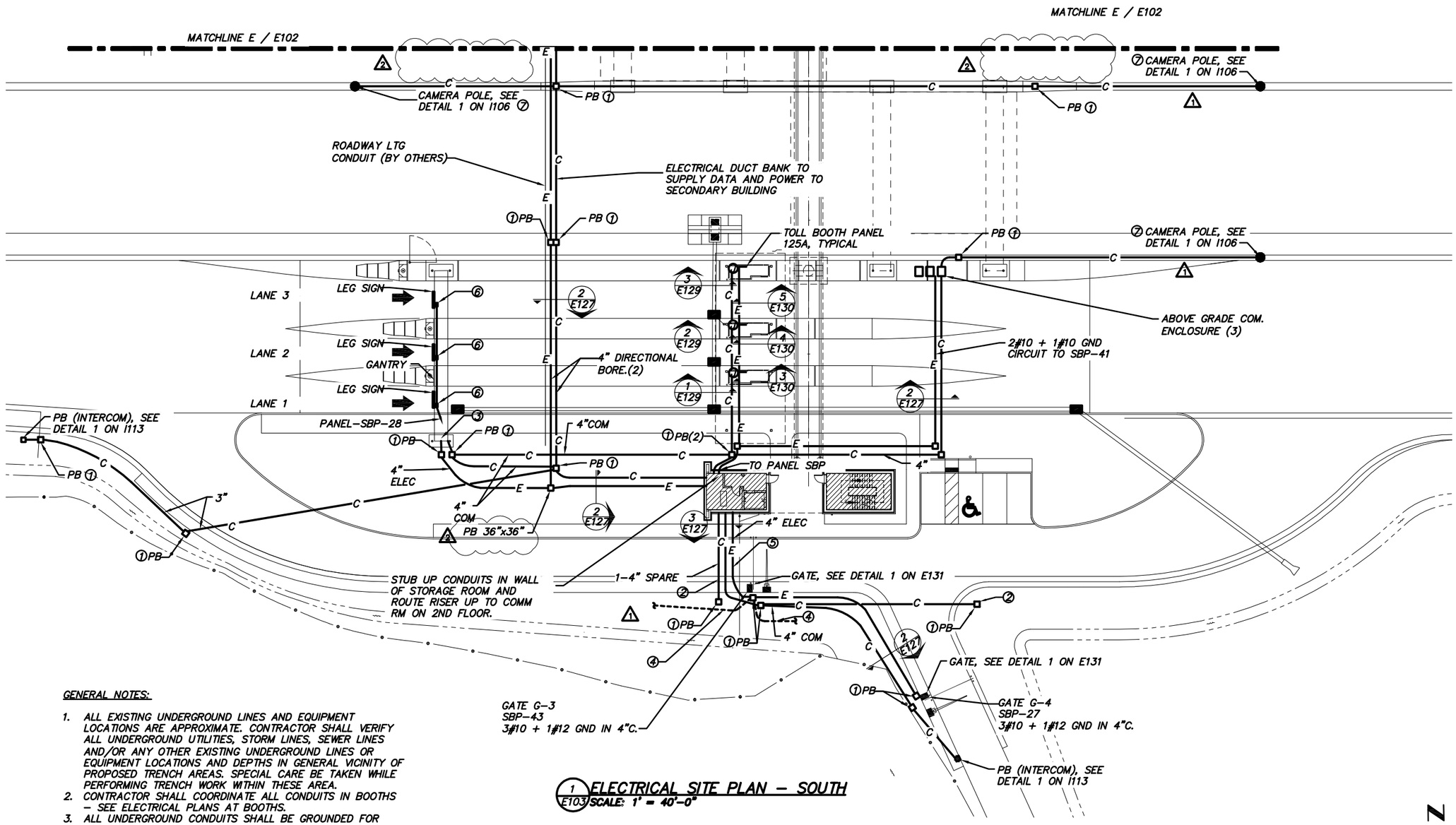

1 E103 ELECTRICAL SITE PLAN – SOUTH

SCALE: 1" = 40'-0"

GENERAL NOTES:

1. ALL EXISTING UNDERGROUND LINES AND EQUIPMENT LOCATIONS ARE APPROXIMATE. CONTRACTOR SHALL VERIFY ALL UNDERGROUND UTILITIES, STORM LINES, SEWER LINES AND/OR ANY OTHER EXISTING UNDERGROUND LINES OR EQUIPMENT LOCATIONS AND DEPTHS IN GENERAL VICINITY OF PROPOSED TRENCH AREAS. SPECIAL CARE BE TAKEN WHILE PERFORMING TRENCH WORK WITHIN THESE AREA.
2. CONTRACTOR SHALL COORDINATE ALL CONDUITS IN BOOTHS – SEE ELECTRICAL PLANS AT BOOTHS.
3. ALL UNDERGROUND CONDUITS SHALL BE GROUNDED FOR CONCRETE ENCASEMENT (TYP).
4. LEAVE 1' OF SEPARATION BETWEEN NEW DUCTBANKSAND UNDERDRAIN OR OTHER UTILITIES.
5. 6" MINIMUM BURIAL DEPTH FOR ALL NEW R.G.S. CONDUITS IN ISLAND.
6. ADDITIONAL CONDUITS FOR DATA AND COMMUNICATIONS ARE NOT SHOWN. REFER TO TOLLING DRAWINGS.

KEY NOTES:

1. 24"X24"X36"D IN-GRADE POLYMER PULLBOX WITH BOTTOM AND GRAVEL DRAIN.
2. PROVIDE (1) 4" EMPTY PVC CONDUIT WITH PULL STRING FOR FUTURE USE.
3. POWER AND COMM CONDUITS SHALL BE TURNED UP AND ROUTED UP GANTRY SUPPORT STRUCTURE AND ROUTED ACROSS GANTRY FRAMING TO DEVICES, REFER TO GANTRY ELECTRICAL/IT DETAILS ON I114.
4. LIGHTING CONDUIT, AND WIRING INSTALLED BY 39-20-02 CONTRACTOR.
5. PROVIDE A 4"ø CONDUIT FROM THE PB TO THE BUILDING FOR THE GATE CIRCUIT AND LIGHTING. THE 39-20-02 CONTRACTOR WILL RUN THE LIGHTING CIRCUIT INTO THE BUILDING/ PANEL.
6. PROVIDE 208V, 2PST NFSS, NEMA 4 SS, MOUNTED BEHIND LED SIGN ON TRUSS. PROVIDE A 15' LIQUID-TIGHT WHIP FOR CONNECTION TO LEF SIGN BY 39-20-02 CONTRACTOR.
7. PROVIDE COM AND POWER TO DVAS CAMERA WITH 20' OF SLACK FOR TERMINATION BY TCS INTEGRATOR. THE POLE FOUNDATION, POLE, AND CONDUIT SHALL BE PROVIDED BY 39-20-02.

N

0 20 40
HORIZONTAL SCALE IN FEET

DESIGN AGENCY
PRIME EV
540 White Pond Drive, Ste. E
Akron, Ohio 44320
(330)-864-7755

NO.	REVISIONS	BY	DATE
1	ADDEND. JM No. 2	CK	5/12/20
2	ADDENDUM No. 3	CK	5/15/20

DESIGNED RNS | CHECKED CEK
DRAWN RNS | IN CHARGE CEK

ELECTRICAL SITE PLAN – SOUTH
TOLL PLAZA 49
LUCAS COUNTY

PROJECT 58-20-01
DATE: 04/22/2020

E103

184
202

OHIO TURNPIKE AND INFRASTRUCTURE COMMISSION

GENERAL NOTES

1. SEE ELECTRICAL, STRUCTURAL, MECHANICAL, CIVIL, AND ARCHITECTURAL DRAWINGS FOR ADDITIONAL INFORMATION.
2. THE CONTACT DRAWINGS INDICATE THE GENERAL ARRANGEMENT FOR THE COMMUNICATIONS AND SECURITY SYSTEMS.
3. DRAWINGS ARE DIAGRAMMATIC AND DO NOT INDICATE NECESSARY OFFSETS, OBSTRUCTIONS, OR STRUCTURAL CONDITIONS.
4. ALL WORKING SHALL CONFORM TO REQUIREMENTS OF THE SPECIFICATIONS, CONTRACT DRAWINGS, LATEST EDITION OF THE NFPA, THE NATIONAL ELECTRICAL SAFETY CODE (NESC) AND THE REGULATIONS OF OTHER AUTHORITIES HAVING JURISDICTION.
5. CONDUITS, JUNCTION BOXES AND OTHER EQUIPMENT INSTALLED SHALL NOT INTERFERE WITH THE OPERATION OF WINDOWS, DOOR, ETC.
6. CAREFULLY CHECK SPACE REQUIREMENTS, INCLUDING SERVICING SPACE REQUIREMENTS, TO ENSURE THAT ALL EQUIPMENT AND MATERIALS CAN BE INSTALLED IN SPACES ALLOTTED THERETO, AND MEETS N.E.C. REQUIREMENTS FOR WORKING CLEARANCE.
7. COMMUNICATION AND SECURITY CABLES SHALL BE INSTALLED IN CONFORMANCE WITH SPECIFICATIONS.
8. GROUNDED SYSTEM FOR COMMUNICATION AND SECURITY ENCLOSURES , CABINETS, EQUIPMENT, JUNCTION BOXES AND ANY OTHER EQUIPMENT OR APPARATUS SHALL COMPLY WITH THE REQUIREMENTS OF THE SPECIFICATIONS.
9. PROVIDED ALL CORE DRILLS NECESSARY FOR COMMUNICATION AND POWER CONDUIT ROUTING, PROPERLY SEAL ALL PENETRATIONS. INSTALL FIRE STOPPING FOR CORE DRILLS WHERE REQUIRED BY CODE.
10. CABLES CONNECTING IP DEVICES TO THE SWITCHES ARE NOT TO EXCEED 328 FEET IN LENGTH, INCLUDING ALL PATCH/JUMPER CABLES.
11. INSTALL ETHERNET SURGE SUPPRESSOR ON CAT6 CABLE AT EACH END FOR EACH EXTERIOR DEVICE, GROUND ALL SURGE SUPPRESSORS.
12. ALL EXTERIOR DEVICES SHALL UTILIZE OUTSIDE PLANT RATED SHIELDED CATEGORY 6A-GEL FILLED CABLE WITH WATER BLOCKING UNLESS OTHERWISE SPECIFIED.
13. PROVIDE A GREEN INSULATED EQUIPMENT GROUNDING CONDUCTOR TO EACH PIECE OF COMMUNICATIONS AND SECURITY EQUIPMENT. PROVIDE A GROUND BAR ON EACH RACK, EACH RACK IS TO BE BE GROUNDED TO EARTH. RACK EQUIPMENT IS TO BE GROUNDED TO RACK. COMBINING GROUNDING CONDUCTORS, OR THE USE OF CONDUIT AS AN EQUIPMENT, COMBINING GROUNDING CONDUCTORS, OR THE USE OF CONDUIT AS AN EQUIPMENT GROUND, SHALL NOT BE PERMITTED.
14. ALL METALLIC CONDUITS AND RACEWAYS SHALL BE ELECTRICALLY CONTINUOUS AND GROUNDED.
15. CONTRACTOR TO PROVIDE ALL WIRING DEVICES REQUIRED BY N.E.C. INCLUDING, BUT NOT LIMITED TO DISCONNECT SWITCHES, ETC.
16. ALL DEVICES SHALL BE NETWORKED AND POE POWERED UNLESS OTHERWISE SPECIFIED. IP CAMERAS SHALL COMPLY TO IEEE 802.3AF. INCLUDE A HARDENED POE POWER BOOSTER TO ACHIEVE REQUIRED POWER , OR POWER THE CAMERA FROM A SEPARATE CAMERA POWER SUPPLY (PROVIDED THERE IS SUFFICIENT SPACE FOR POWER SUPPLY INSTALLATION).
17. 8'H X 4'W X 3/4 T GRADE ACX PAINTED PLYWOOD SHALL BE PLACED ON DESIGNATED WALL OF THE COMMUNICATIONS ROOM. PLYWOOD SHALL BE PAINTED TWO COATS OF FIRE RETARDANT WHITE PAINT.
18. INSTALL CABLE TRAY WITH MINIMAL 12" CLEARANCE ABOVE AND ON ONE SIDE OF TRAY. TRAY SHALL HAVE A MINIMAL 3" CLEARANCE BELOW WHEN PLACED ABOVE LIGHTING FIXTURES OR ABOVE ACCESSIBLE CEILING SPACE.
19. BACK BOXES INSTALLED FOR COMMUNICATIONS DATA AND VOICE WIRING TERMINATION SHALL BE SINGLE GANG OUTLET BOXES TO ALLOW FOR THE REQUIRED WORKING CLEARANCE OF THE CAT6 CABLE. THESE BOXES SHALL BE SEPARATE FROM ELECTRICAL JUNCTION BOXES AND BE EXCLUSIVELY FOR DATA AND VOICE COMMUNICATIONS.
20. THE NUMBER OF HORIZONTAL CABLES PLACED IN A CABLE SUPPORT OR PATHWAY SHALL BE LIMITED TO A NUMBER OF CABLES THAT WILL NOT CAUSE THE GEOMETRIC SHAPE OF THE CABLES TO BE ALTERED UNDER NO CIRCUMSTANCES SHALL CABLES IN THE HORIZONTAL PATHWAY BE BUNDLED. THIS IS TO MINIMIZE "ALIEN" CROSS-TALK.
21. CONDUITS SHALL HAVE CONNECTORS, PROTECTIVE BUSHINGS, PULL STRINGS, AND SHALL BE GROUNDED.
22. ELECTRICAL CONTRACTOR SHALL ADHERE TO COMMERCIAL BUILDING STANDARD FOR TELECOMMUNICATIONS PATHWAYS SET FOURTH IN ANSI-TIA-569-C STANDARD.
23. ALL COMM. SHALL BE PROVIDED, INSTALLED AND TESTED IN THIS CONTRACT UNLESS OTHERWISE NOTED.
24. THE TCS INTEGRATOR WILL TERMINATE AND TEST ALL COMM. CABLING FOR THE TOLL COLLECTION SYSTEM. ANY COMM. CABLING THAT IS DAMAGED OR WILL NOT TEST CORRECTLY SHALL BE RE-INSTALLED BY THIS CONTRACT AT NO ADDITIONAL COST TO THE COMMISSION.

2

ITS ABBREVIATIONS

AFC	ABOVE FINISHED CEILING	ITC	VOIP INTERCOM
AFF	ABOVE FINISHED FLOOR	NEC	NATIONAL ELECTRIC CODE
AFG	ABOVE FINISHED GRADE	PBX	PRIVATE BRANCH EXCHANGE
CAT6	CATEGORY 6 CABLE	POE	POWER OVER ETHERNET
CCTV	CLOSED CIRCUIT TELEVISION	PSIM	PHYSICAL SECURITY INFORMATION MANAGEMENT
CKT	CIRCUIT	SFP	SMALL FORM-FACTOR PLUGGABLE
CL	CENTERLINE	VOIP	VOICE OVER INTERNET PROTOCOL
DWG	DRAWING		
EACS	ELECTRONIC ACCESS CONTROL SYSTEM		

ITS LEGEND

SYMBOL	DESCRIPTION	MOUNTING HEIGHT
	TELECOMMUNICATIONS QUAD JACK FACEPLATE OUTLET	18"
	VOIP INTERCOM	4'-0" TO CL
	WALL MOUNTED TELEPHONE OUTLET	48" 1
D	DOME FIXED IP CAMERA ## - CAMERA NUMBER	7'-6" TO TOP
	FIXED IP CAMERA ## - CAMERA NUMBER	SEE DETAIL ON I111
P	PAN/TILT/ZOOM IP CAMERA ## - CAMERA NUMBER	60' TO TOP
	180 DEGREE VIEW IP CAMERA ## - CAMERA NUMBER	7'-6" TO TOP
	PANELBOARD-SURAFCE MOUNTED	
	TELEPHONE EQUIPMENT BACKBOARD	2'-0" TO CL
	CONDUIT IN OR ABOVE CEILING OR WALL (NO. OF TICKS INDICATE NO. OF CONDUCT 2#12+1#12 GRD.-3/4" CONDUIT UNLESS OTHERWISE NOTED	
	HOMERUN TO PANEL, ARROW INDICATES NO. OF CIRCUITS (NO. OF TICKS INDICATE NO. OF CONDUCT 2#12+1#12 GRD.-3/4" CONDUIT UNLESS OTHERWISE NOTED	
	FLEXIBLE METAL CONDUIT CONCEALED IN CEILING OR WALL	
	CONDUIT IN OR BELOW FLOOR	
—T—	UNDERGROUND TELEPHONE CONDUIT/DUCTBANK	
J	JUNCTION BOX	
2	SEE DRAWING NOTE OF SAME NUMBER	
SP1 00	SECURE DIRECTION OF TRAVEL DOOR STYLE DOOR NUMBER	

DESIGN AGENCY
PRIME AE
540 White Pond Drive, Ste. E
Akron, Ohio 44320
(330)-864-7755

NO.	REVISIONS	BY	DATE
1	ADDENDUM No. 2	CK	5/12/20
2	ADDENDUM No. 3	CK	5/12/20

DESIGNED RNS
DRAWN RNS
CHECKED CEK
IN CHARGE CEK

ITS LEGEND. ABBREVIATIONS AND NOTES.
TOLL PLAZA 49
LUCAS COUNTY

PROJECT 58-20-01
DATE: 04/22/2020

I101

182
202

OHIO TURNPIKE AND INFRASTRUCTURE COMMISSION

Project Name 5/12/2020 12:16:45 PM

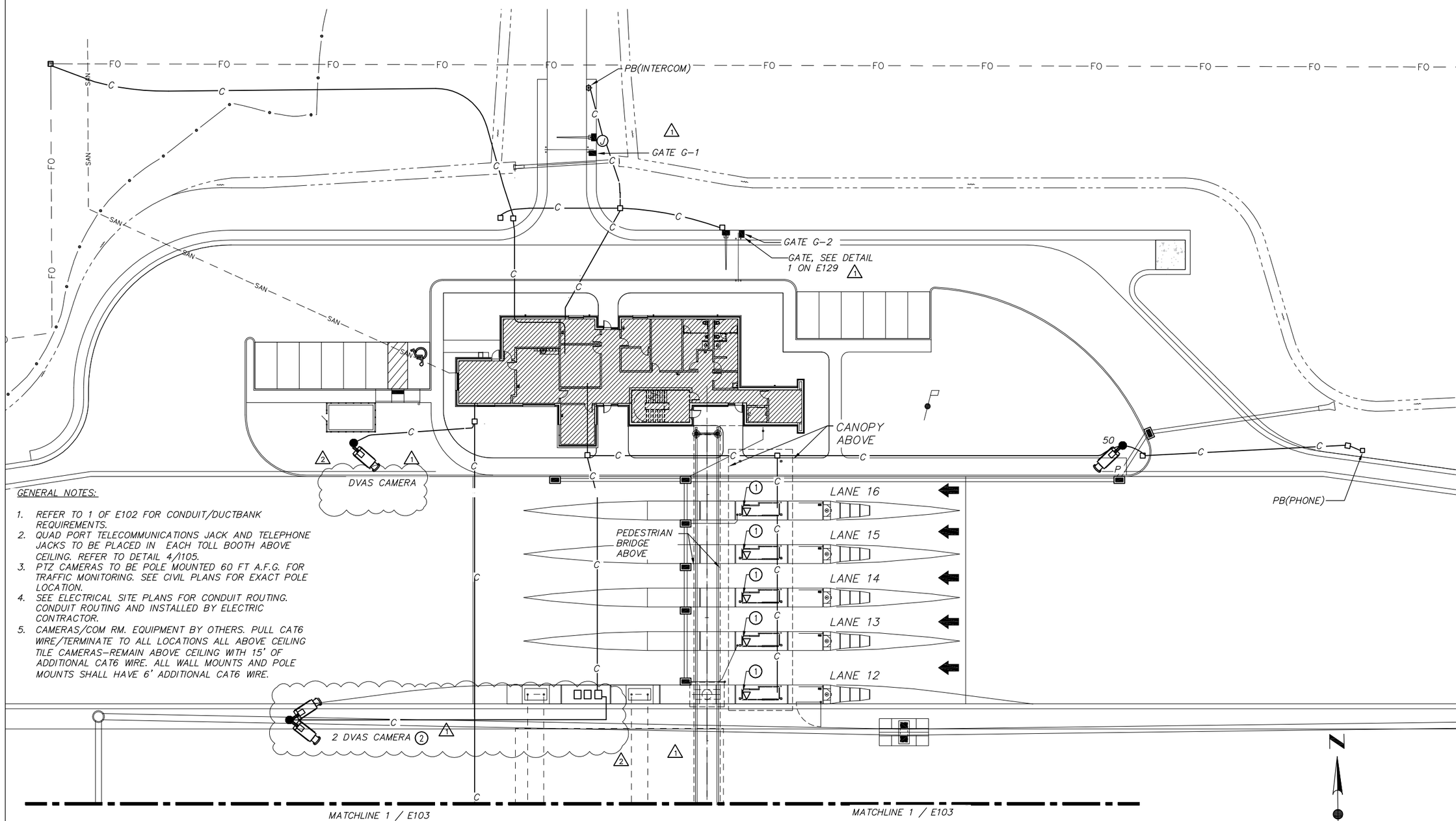

GENERAL NOTES:

1. REFER TO 1 OF E102 FOR CONDUIT/DUCTBANK REQUIREMENTS.
2. QUAD PORT TELECOMMUNICATIONS JACK AND TELEPHONE JACKS TO BE PLACED IN EACH TOLL BOOTH ABOVE CEILING. REFER TO DETAIL 4/I105.
3. PTZ CAMERAS TO BE POLE MOUNTED 60 FT A.F.G. FOR TRAFFIC MONITORING. SEE CIVIL PLANS FOR EXACT POLE LOCATION.
4. SEE ELECTRICAL SITE PLANS FOR CONDUIT ROUTING. CONDUIT ROUTING AND INSTALLED BY ELECTRIC CONTRACTOR.
5. CAMERAS/COM RM. EQUIPMENT BY OTHERS. PULL CAT6 WIRE/TERMINATE TO ALL LOCATIONS ALL ABOVE CEILING TILE CAMERAS–REMAIN ABOVE CEILING WITH 15' OF ADDITIONAL CAT6 WIRE. ALL WALL MOUNTS AND POLE MOUNTS SHALL HAVE 6' ADDITIONAL CAT6 WIRE.

KEY NOTES:

1. ~~PROVIDE 4 CAT6 DROPS WITH A JACK.~~
2. PROVIDE COM AND POWER TO DVAS CAMERA WITH 20' OF SLACK FOR TERMINATION BY THE TCS INTEGRATOR. THE POLE FOUNDATION, POLE, AND CONDUIT SHALL BE PROVIDED BY 39–20–02.

1 / I102 ITS OVERALL SITE PLAN
SCALE: 1' = 40'–0"

DESIGN AGENCY
PRIME AE
540 White Pond Drive, Ste. E
Akron, Ohio 44320
(330)-864-7755

NO.	REVISIONS	BY	DATE
1	ADDENDUM No. 2	CK	5/12/20
2	ADDENDUM No. 3	CK	5/15/20

DESIGNED RNS
CHECKED CEK
DRAWN RNS
IN CHARGE CEK

LUCAS COUNTY

ITS SITE PLAN

TOLL PLAZA 49

PROJECT 58-20-01
DATE: 04/22/2020

I102

183
202

OHIO TURNPIKE AND INFRASTRUCTURE COMMISSION

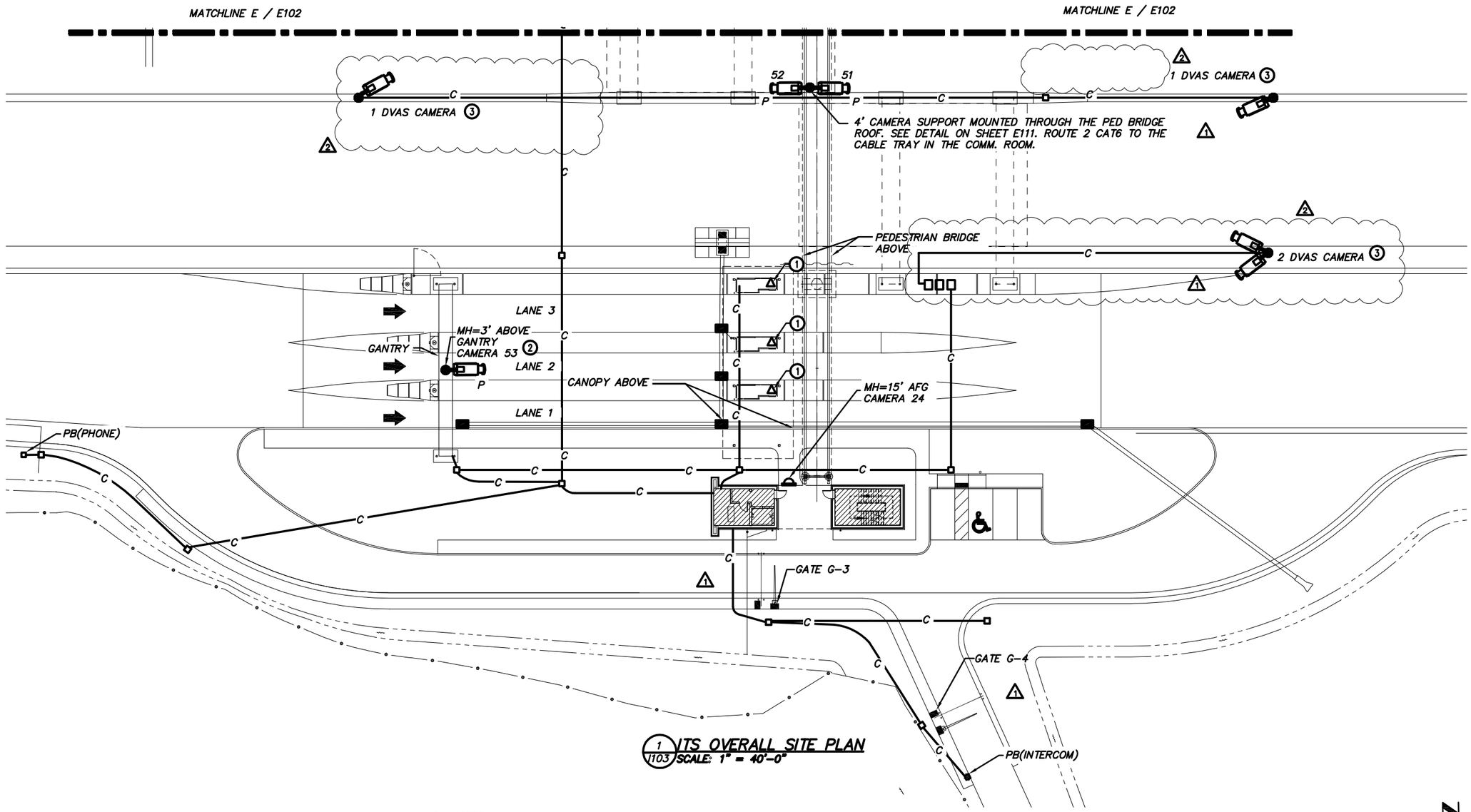

1 / I103 ITS OVERALL SITE PLAN
SCALE: 1" = 40'-0"

GENERAL NOTES:

1. REFER TO 1 OF E103 FOR CONDUIT/DUCTBANK REQUIREMENTS.
2. QUAD PORT TELECOMMUNICATIONS JACK AND TELEPHONE JACKS TO BE PLACED IN EACH TOLL BOOTH ABOVE CEILING. REFER TO DETAIL 4/I105.
3. PTZ CAMERAS TO BE POLE MOUNTED 60 FT A.F.G. FOR TRAFFIC MONITORING. SEE CIVIL PLANS FOR EXACT POLE LOCATION.
4. SEE ELECTRICAL SITE PLANS FOR CONDUIT ROUTING. CONDUIT ROUTING AND INSTALLED BY ELECTRIC CONTRACTOR.
5. CAMERAS/COM RM. EQUIPMENT BY OTHERS. PULL CAT6 WIRE/TERMINATE TO ALL LOCATIONS ALL ABOVE CEILING TILE CAMERAS-REMAIN ABOVE CEILING WITH 15' OF ADDITIONAL CAT6 WIRE. ALL WALL MOUNTS AND POLE MOUNTS SHALL HAVE 6' ADDITIONAL CAT6 WIRE.

KEY NOTES:

1. ~~PROVIDE 4 CAT6 DROPS WITH A JACK.~~
2. PROVIDE 2 PELCO-PN SP-5730 BRACKETS AND A 9' LONG -2"ø GALVANIZED PIPE W/CAPS. ATTACH THE BRACKETS TO THE TOP AND BOTTOM CORD.
3. PROVIDE COM AND POWER TO DVAS CAMERA WITH 20' OF SLACK FOR TERMINATION BY THE TCS INTEGRATOR. THE POLE FOUNDATION, POLE, AND CONDUIT SHALL BE PROVIDED BY 39-20-02.

N

0 20 40
HORIZONTAL SCALE IN FEET

DESIGN AGENCY
PRIME AE
540 White Pond Drive, Ste. E
Akron, Ohio 44320
(330)-864-7755

NO.	REVISIONS	BY	DATE
1	ADDENDUM No. 2	CK	5/12/20
2	ADDENDUM No. 3	CK	5/15/20

DESIGNED RNS
DRAWN RNS
CHECKED CEK
IN CHARGE CEK

ITS OVERALL SITE PLAN
TOLL PLAZA 49
LUCAS COUNTY

PROJECT 58-20-01
DATE: 04/22/2020

I103

184
202

OHIO TURNPIKE AND INFRASTRUCTURE COMMISSION

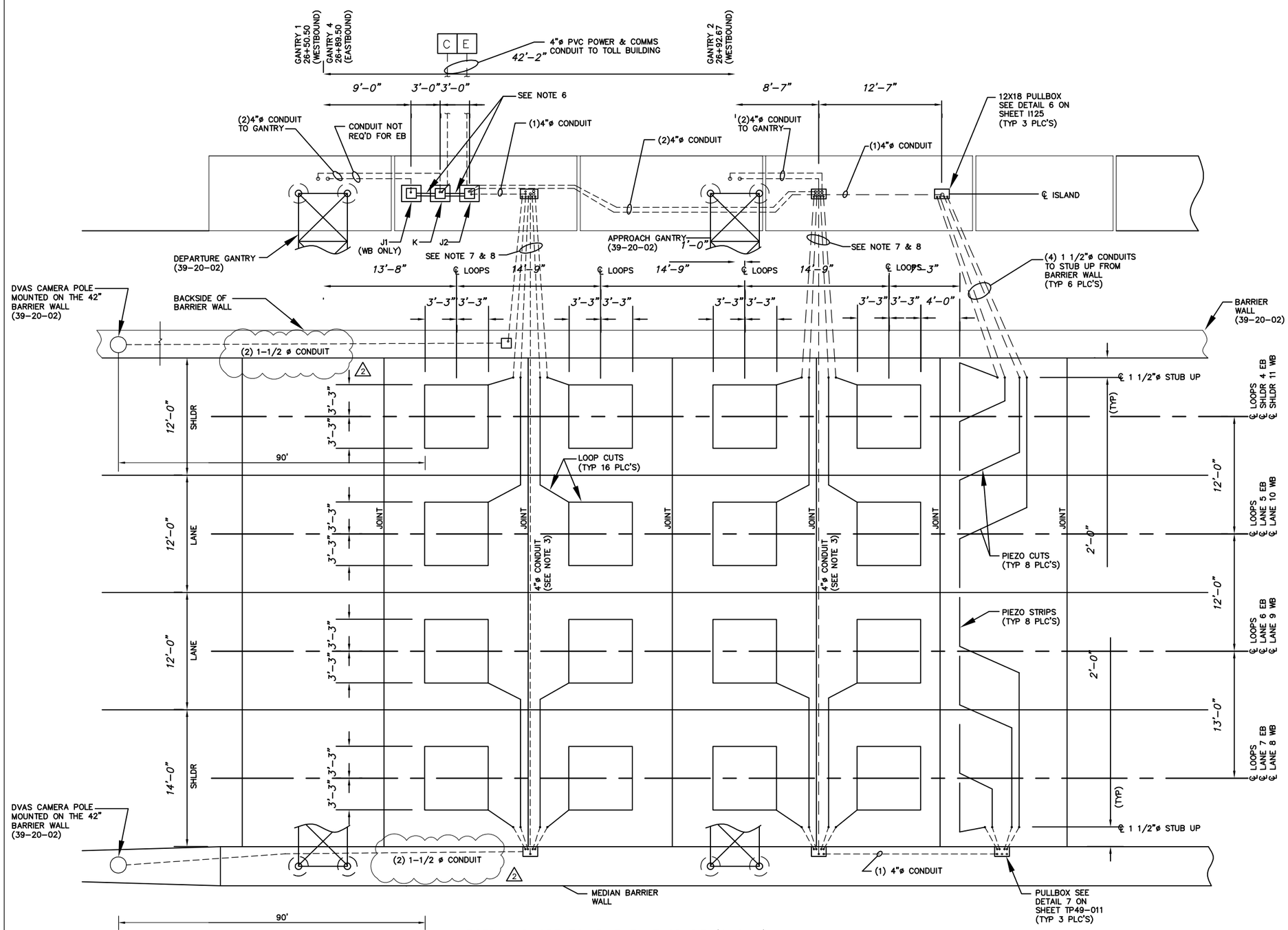

WESTBOUND ORT EQUIPMENT AT GRADE (SHOWN)
EASTBOUND ORT EQUIPMENT AT GRADE (OPP HAND MIRRORED)

ORT EQUIPMENT AT GRADE NOTES:

1. ALL CONDUIT SHALL BE SCH 80 PVC UNLESS NOTED OTHERWISE.
2. ALL STUB UP CONDUIT FOR ROADWAY SENSORS SHALL BE 1 1/2"ø SCH 80 PVC. ALL STUB UP CONDUIT SHALL BE ROUTED IN ROADWAY AGGREGATE BASE AND SHALL NOT PENETRATE SOIL CEMENT SUB-BASE.
3. THE 3" CONDUIT CROSSING ORT ROADWAY SHALL HAVE 30" COVER FROM TOP OF PAVING. EXTEND 30" FROM BARRIER WALL TO JUNCTION BOX.
4. ALL PULLBOXES SHALL BE PER OHIO STANDARD.
5. CABINETS J1, K AND J2 ARE GROUND MOUNTED MCCAIN TRAFFIC CABINETS.
6. GROUND MOUNTED CABINETS SHALL HAVE (2) 4"ø RIGID METAL CONDUIT TO CONNECT TO CABINETS ABOVE GRADE. CONDUIT SHALL BE FOR SEPARATE POWER AND COMMS AND SHALL BE LOCATED AT THE BOTTOM OF THE CABINETS.
7. THE 39-20-02 CONTRACTOR IS INSTALLING THE ORT CONCRETE, All 4 GANTRIES OVER THE MAINLINE AND ALL UNDER GROUND CONDUIT WILL BE STUBED OUT FROM THE BACKSIDE OF THE BARRIER WALL. EXTEND (4 OR 5) 1 1/2"ø CONDUITS AND (1) 4"ø CONDUIT FROM THE BARRIER WALL TO THE JUNCTION BOXS.
8. THE 58-20-01 CONTRACTOR SHALL PROVIDE THE WIRE PER SHEET I121.
9. THE CONTRACTOR SHALL OMIT THE J1 CABINET AND ASSOCIATED GANTRY CONDUIT FOR THE EASTBOUND ORT ONLY. THE CABINET LOCATIONS AND CONDUIT FOR K AND J2 WILL REMAIN THE SAME.

△1 ENTIRE SHEET

DESIGN AGENCY
PRIME EA
540 White Pond Drive, Ste. E
Akron, Ohio 44320
(330)-864-7755

NO.	REVISIONS	BY	DATE
1	ADDENDUM No. 2	CK	5/12/20
2	ADDENDUM No. 3	CK	5/15/20

DESIGNED	CHECKED
RNS	CEK
DRAWN	IN CHARGE
RNS	CEK

TYPICAL ORT OVERHEAD EQUIPMENT

TOLL PLAZA 49 — LUCAS COUNTY

PROJECT 58-20-01
DATE: 04/22/2020

I119

OHIO TURNPIKE AND INFRASTRUCTURE COMMISSION

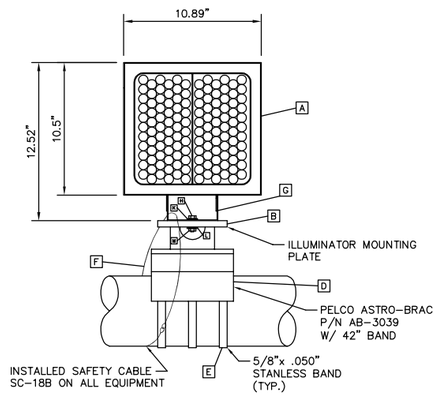

FRONT VIEW

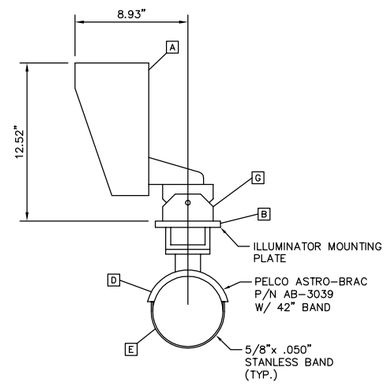

SIDE VIEW

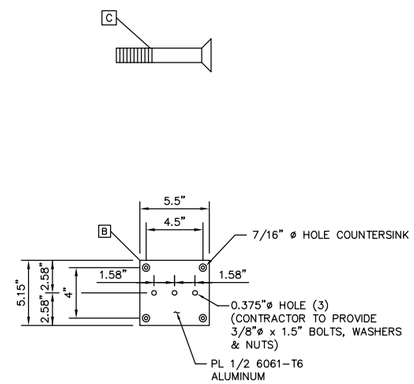

ILLUMINATOR MOUNTING PLATE

NOTE:

1. ALL MOUNTING BRACKS AND HARDWARE SHALL BE PROVIDED BY THE INTERGRATOR AND INSTALLED BY THE 58-20-01 CONTRACTOR.

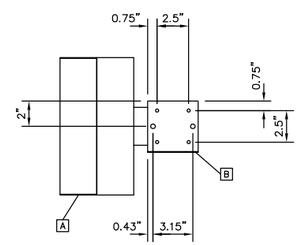

BOTTOM VIEW
ILLUMINATOR BRACKET

	POS. DESCRIPTION
A	ILLUMINATOR TNL 50
B	ILLUMINATOR MOUNTING PLATE SERIES 1
C	BOLTS, PHILLIPS CONTERSUNK 3/8"X16X1.25" ASTM F879 SS
D	PELCO ASTRO-BRAC P/N AB-3039 W/42" BAND 6061-T6 ALUMINUM
E	5/8"x .050" STANLESS BAND 6061-T6 ALUMINUM
F	SAFETY CABLE SC-18B
G	ADJUSTABLE ILLUMINATOR BRACKET
H	HEX HEAD BOLT 1/4"X20X1.5" ASTM F593 SS
K	FLAT WASHER 1/4" SS 304
L	LOCK NUT 1/4" SS 304
M	HEX NUT 1/4" ASTM F594 SS
N	
P	
Q	
R	
S	
T	

2

ILLUMINATOR MOUNTING DETAILS (GANTRY)

1 ENTIRE SHEET

2

ILLUMINATOR MOUNTING CANOPY DETAIL

LUCAS COUNTY

TOLL PLAZA 49

DESIGN AGENCY
PRIME AE
540 White Pond Drive, Ste. E
Akron, Ohio 44320
(330)-864-7755

NO.	REVISIONS	BY	DATE
1	ADDENDUM No. 2	CK	5/12/20
2	ADDENDUM No. 3	CK	5/15/20

DESIGNED	CHECKED
RNS	CEK
DRAWN	IN CHARGE
RNS	CEK

PROJECT 58-20-01
DATE: 04/22/2020

I140

202S
202

OHIO TURNPIKE AND INFRASTRUCTURE COMMISSION