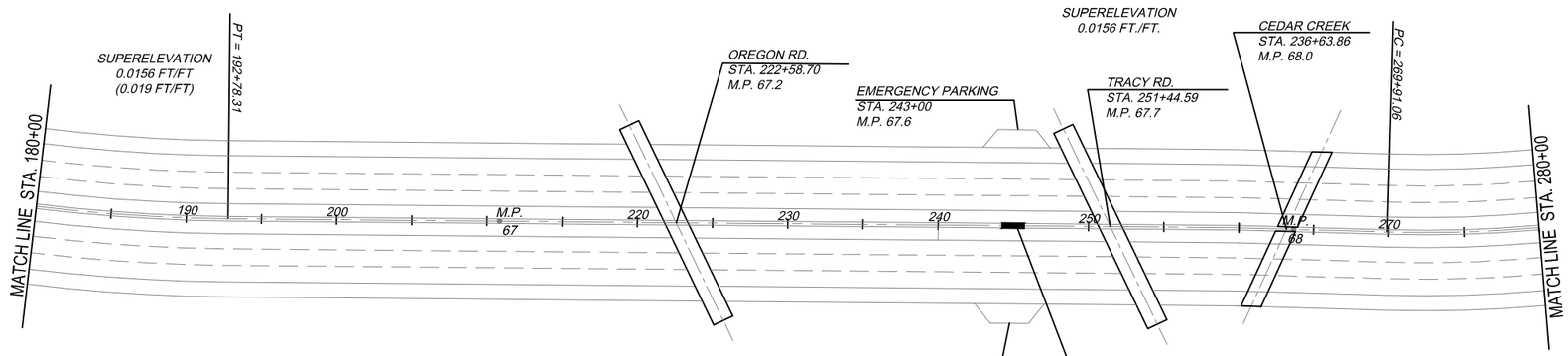

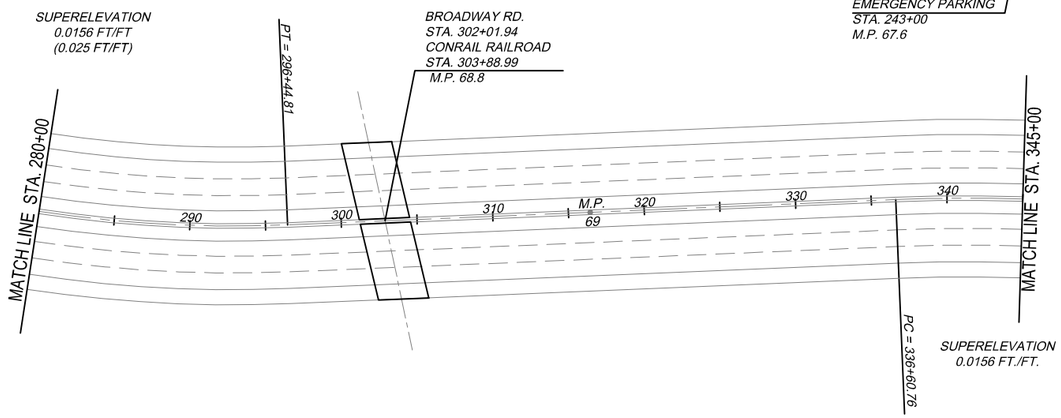

LEGEND
X.XX FT/FT = SUPERELEVATION FOR RIGHT AND CENTER LANE
(X.XX FT/FT) = SUPERELEVATION FOR LEFT LANE

PERMANENT MONUMENTS OFFSET 5' RIGHT OF ℄ EASTBOUND MEDIAN	
182+50.00	269+91.06
192+78.31	279+00.00
200+00.00	290+00.00
210+00.00	296+44.81
220+00.00	300+00.00
229+00.00	310+00.00
240+00.00	320+00.00
250+00.00	330+00.00
260+00.00	336+60.76

SP 536 CONCRETE WEATHERPROOFING
-DECK, ABUTMENT AND APPROACH SLAB
(FOR WEATHERPROOFING THE BRIDGE DECK, ABUTMENT SLAB & APPROACH SLAB SURFACES)

OREGON RD.	E.B. & W.B.	1000 S.Y.
TRACY RD.	E.B. & W.B.	962 S.Y.
CEDAR CREEK	E.B. & W.B.	1303 S.Y.
BROADWAY RD.- CONRAIL RAILROAD	E.B. & W.B.	4993 S.Y.
	SUBTOTAL	8,258 S.Y.

AREA TO BE WEATHERPROOFED IS FROM TOE OF MEDIAN WALL TO TOE OF OUTSIDE/RIGHT PARAPET. CONTRACTOR TO PLAN OPERATION ACCORDINGLY.

** SP 536 CONCRETE WEATHERPROOFING - PARAPETS
FOR WEATHERPROOFING THE FRONT FACE, TOP AND BACK FACE OF THE BRIDGE PARAPETS AND THE UNDERSIDES OF THE BRIDGE DECKS TO THE FACIA BEAM UNLESS OTHERWISE NOTED.

+ OREGON RD.	E.B. & W.B.	384 S.Y.
+ TRACY RD.	E.B. & W.B.	366 S.Y.
+ CEDAR CREEK	E.B. & W.B.	161 S.Y.
+ BROADWAY RD.- CONRAIL RAILROAD	E.B. & W.B.	462 S.Y.
	SUBTOTAL	1373 S.Y.

** PARAPET WEATHERPROOFING WILL REQUIRE TRAFFIC CONTROL ON LOCAL ROADS IN ACCORDANCE WITH APPLICABLE SECTIONS OF THE OHIO MANUAL UNIFORM TRAFFIC CONTROL DEVICES. TRAFFIC CONTROL WORK INCIDENTAL TO SP 614 MAINTAINING TRAFFIC.

+ FOR WEATHERPROOFING THE FRONT FACE, TOP AND UPPER 2'-8" OF THE BACK FACE OF THE BRIDGE PARAPET.

ITEM SPECIAL - EXISTING CROSSOVER TO BE CLOSED/RE-OPENED, AS PER PLAN
THIS ITEM SHALL BE USED FOR STAGE 1 WORK. THIS ITEM SHALL CONSIST OF CLOSING AND RE-OPENING EXISTING MEDIAN CROSSOVERS AT MILEPOSTS 62.50±, 65.70±, 67.60±, 71.20±, 72.50± AND 74.80± IN ACCORDANCE WITH OTIC STANDARD DRAWING TCB-3. ALL SECTIONS OF PORTABLE CONCRETE BARRIER WILL BE PROVIDED BY THE CONTRACTOR. PAYMENT FOR THIS ITEM SHALL BE AT THE CONTRACT UNIT PRICE BID FOR EACH AND SHALL BE CONSIDERED FULL COMPENSATION FOR ALL LABOR, EQUIPMENT, MATERIALS AND INCIDENTALS, INCLUDING PROVIDING NCHRP 350 APPROVED TEMPORARY CONCRETE BARRIER, NECESSARY TO COMPLETE THE WORK TO CLOSE AND RE-OPEN THE CROSSOVERS.

SPECIAL-SECURING MANHOLE LID
ITEM SPECIAL-SECURING MANHOLE LID, 10 EACH, HAS BEEN ADDED TO THE PLANS AND SHALL BE USED TO SAFELY SECURE THE MANHOLE LID TO THE MANHOLE CASTING FOR TEMPORARY TRAFFIC CONTROL PURPOSES. THE MANHOLE LIDS ARE LOCATED IN THE MEDIAN/LEFT SHOULDER WITHIN PROJECT LIMITS (WB MP 62.72, 62.78, 64.88, 64.94, 64.99, 65.05, 65.09, 71.91, 71.95, AND 72.58). SECURING OF MANHOLE LID SHALL CONSIST OF THE FOLLOWING: THE CONTRACTOR SHALL REMOVE THE MANHOLE LID AND REMOVE ANY DEBRIS FROM THE CASTING LIP THAT THE MANHOLE LID RESTS ON; THE CONTRACTOR SHALL RESEAT THE MANHOLE LID AND WELD THE LID TO THE FRAME; PRIOR TO COMPLETION OF THE PROJECT THE CONTRACTOR SHALL REMOVE THE WELD(S) SECURING THE LID TO THE FRAME SO THAT CONTINUED ACCESS TO THE MANHOLE CAN BE MAINTAINED.

WELDING THE LID TO THE FRAME SHALL CONSIST OF FOUR 10" LONG FILLET WELDS LOCATED AT EACH QUADRANT OF THE MANHOLE. REMOVAL OF THE WELDS SHALL BE ACCOMPLISHED BY EITHER GRINDING OR AIR ARCING AND IN SUCH A MANNER SO AS NOT TO DAMAGE OR IMPAIR THE INTEGRITY OF THE LID AND/OR CASTING.

ALL LABOR, EQUIPMENT, MATERIALS AND INCIDENTALS NEEDED TO COMPLETE THE ABOVE MENTIONED WORK SHALL BE INCLUDED IN THE UNIT BID PRICE PER ITEM SPECIAL-SECURING MANHOLE LID.

ITEM SPECIAL - SNAP MILL AND FILL
MAINTENANCE OF TRAFFIC ON THE MEDIAN/LEFT SHOULDER, AND THE RIGHT SHOULDER(S) WILL REQUIRE THE EXISTING "SNAPs" TO BE MILLED AND FILLED. PAYMENT FOR THIS ITEM SHALL INCLUDE ALL OF THE FOLLOWING: REMOVAL OF THE EXISTING "SNAPs" BY MILLING 1 1/2" DEEP AND 5' WIDE; TACK COATING ALL EXPOSED MILLED SURFACES; AND PAVING THE MILLED AREA WITH 1 1/2" OF ITEM SP 404 - ASPHALT CONCRETE SURFACE COURSE, USING CRUSHED STONE, PG 64-22. ALL LABOR, EQUIPMENT, MATERIALS, AND INCIDENTALS NEEDED TO COMPLETE THE ABOVE MENTIONED WORK SHALL BE INCLUDED IN THE UNIT PRICE BID FOR ITEM SPECIAL - "SNAP" MILL AND FILL.

ADDITIONALLY, EASTBOUND AND WESTBOUND FOR BOTH STAGES, THE 5' WIDE SNAP MILL AND FILL SHALL BE CENTERED TO INCLUDE THE REMOVAL OF THE EXISTING SNAPs, THE AREA BETWEEN THE YELLOW/WHITE EDGE LINE AND THE EXISTING SNAPs, AND THE YELLOW/WHITE EDGE LINE. THE CONTRACTOR SHALL PLAN ITS OPERATIONS ACCORDINGLY TO COMPLETE THIS WORK. ADJUSTMENTS MAY BE MADE BY THE CHIEF ENGINEER TO INSURE THAT THE YELLOW/WHITE EDGE LINE AND SNAP'S ARE REMOVED APPROPRIATELY.

1

EMERGENCY PARKING AREAS (EPA'S)
EPA'S SHALL BE RESURFACED AS PART OF THIS PROJECT AND SHALL USE THE SAME SECTION BUILDUP AS THE SHOULDERS (2" MILL AND FILL). ADDITIONAL QUANTITIES OF PAVEMENT PLANING AND RESURFACING HAVE BEEN ADDED TO THE GENERAL SUMMARY FOR RESURFACING EMERGENCY PARKING AREA (EPA) AT MP 67.6 EB/WB. PAVEMENT PLANING AND RESURFACING OF EPA SHALL MATCH SHOULDER PAVING TYPICAL SECTION. ALL LABOR, EQUIPMENT, MATERIALS AND PLANNING NEEDED TO PERFORM THIS WORK SHALL BE INCLUDED IN THE RESPECTIVE BID ITEMS.

DESIGN AGENCY
LJB Inc. ● 6480 ROCKSIDE WOODS SOUTH SUITE 290
INDEPENDENCE, OH 44131
(440) 593-4504 ● LJBInc.com

REVISIONS			
NO.		BY	DATE
1	ADDENDUM NO. 1	DLF	3/18/24
-	-	-	-
-	-	-	-

DESIGNED	CHECKED
DLF	NRW
DRAWN	IN CHARGE
CRB	JJS

RESURFACING PLANS
STA. 180+00 TO STA. 340+50

PROJECT 59-24-02
DATE: 2/2/24

OHIO TURNPIKE AND INFRASTRUCTURE COMMISSION

99-23-0102_GB002-005.dwg; 3/17/24 - 10:48pm

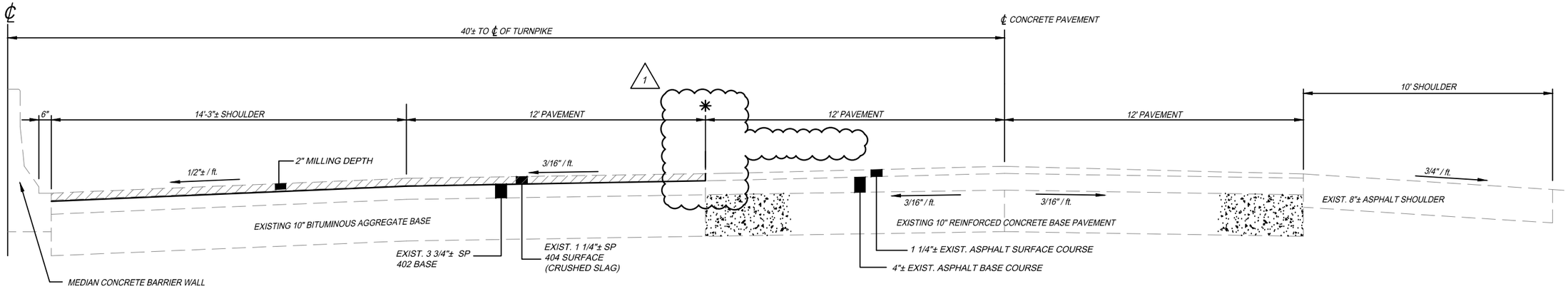

NORMAL SECTION

MP 70.00 TO MP 73.95

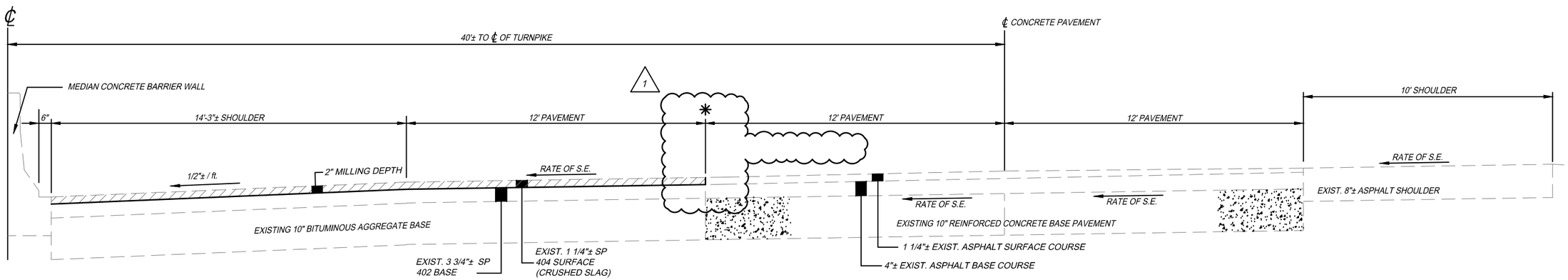

SUPERELEVATED SECTION

MP 70.00 TO MP 73.95

NOTES & LEGEND:

1. CROSS HATCHED AREA INDICATES SURFACED AREA TO BE REMOVED BY MILLING PER ITEM 254.
2. WHERE FULL DEPTH PAVEMENT REPAIRS EXCEED 25' IN LENGTH THE MILLING LIMITS SHALL BE EXTENDED FROM 1'-0" TO 1'-3" BEYOND THE EDGE OF THE EXISTING CONCRETE PAVEMENT.
3. FINAL MILLING WIDTH MAY BE ADJUSTED BY THE CHIEF ENGINEER.
4. RAMP RESURFACING LIMITS ARE APPROXIMATE AND MAY BE ADJUSTED BY THE CHIEF ENGINEER AS NEEDED TO MAINTAIN SAFE TRAFFIC FLOW TO AND FROM THE INTERCHANGE.

(***) CONTRACTOR TO EXCAVATE PAVEMENT, BY MEANS APPROVED BY THE CHIEF ENGINEER, TO LOCATE EDGE OF EXISTING CONCRETE BASE PAVEMENT TO SET PAVING AND STRIPING LIMITS. THIS OPERATION SHALL BE CONSIDERED INCIDENTAL TO THE COST OF THE PROJECT.

✱ SAW CUT IS REQUIRED AND INCIDENTAL TO THE PAVEMENT MILLING OPERATION AND PERFORMED DURING THE RIGHT AND CENTER LANE WORK. SAW CUT TO MATCH EXISTING JOINT LOCATION. SAW CUT MAY BE WAIVED BY CHIEF ENGINEER PROVIDED CONTRACTOR DEMONSTRATES ABILITY TO PROVIDE A STRAIGHT, VERTICAL FACE CUT WITH NO DAMAGE TO ADJACENT PAVEMENT.

MILLING AND RESURFACING AREA

99-23-0102_GY006-008.dwg; 3/17/24 - 10:50pm

DESIGN AGENCY
LJB Inc. ▲ 6480 ROCKSIDE WOODS SOUTH SUITE 290
INDEPENDENCE, OH 44131
(440) 593-4504 ▲ LJBInc.com

NO.	REVISIONS	BY	DATE
1	ADDENDUM NO. 1	DLF	3/18/24
-	-	-	-
-	-	-	-

DESIGNED	CHECKED
DLF	NRW
DRAWN	IN CHARGE
CRB	JJS

EXISTING TYPICAL SECTIONS
MP 70.00 TO MP 73.95

PROJECT 59-24-02
DATE: 2/2/24

OHIO TURNPIKE AND INFRASTRUCTURE COMMISSION

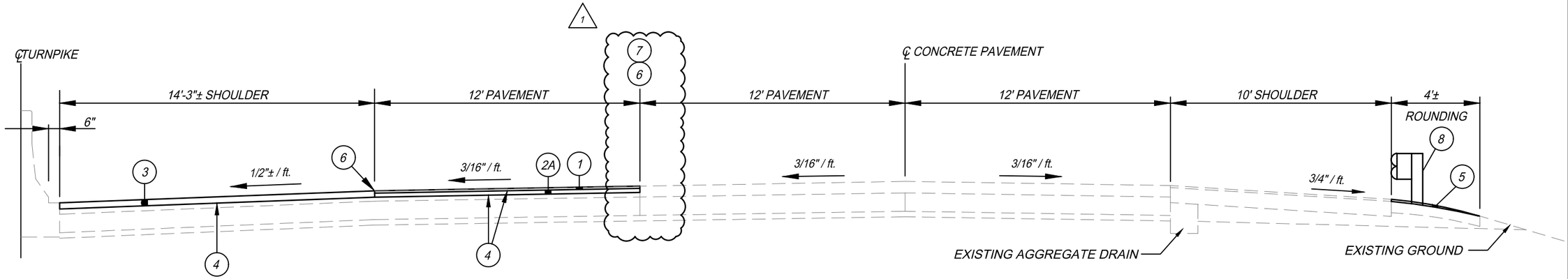

RESURFACING - NORMAL SECTION

MP 70.00 TO MP 73.95

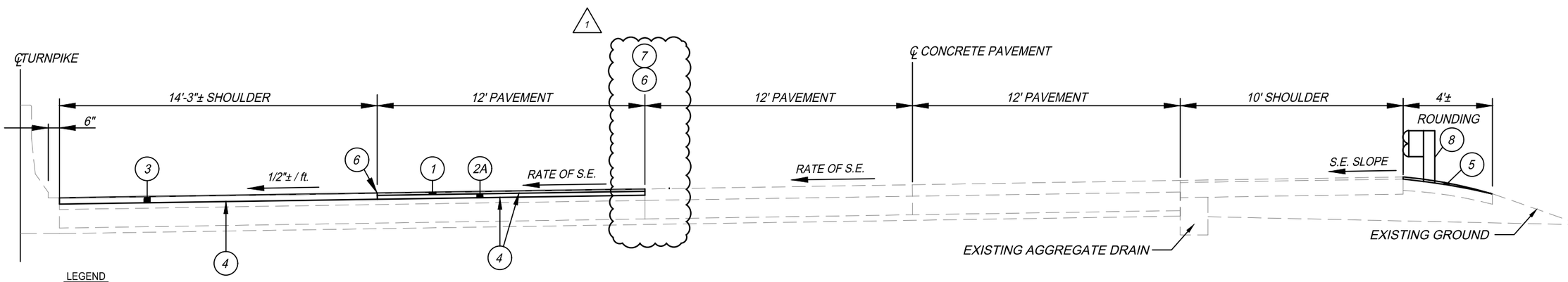

RESURFACING - SUPERELEVATED SECTION

MP 70.00 TO MP 73.95

LEGEND

1	SP 404	1 1/4" ASPHALT CONCRETE SURFACE COURSE, USING CRUSHED SLAG, PG 76-22 (FR)
2	SP 402	1 3/4" ASPHALT CONCRETE INTERMEDIATE COURSE, USING CRUSHED STONE, PG 76-22 (FR)
2A	SP 403	3/4" ASPHALT CONCRETE LEVELING COURSE, USING CRUSHED STONE, PG 76-22 (FR)
3	SP 404	2" ASPHALT CONCRETE SURFACE COURSE, USING CRUSHED STONE, PG 64-22
4	407	NON-TRACKING TACK COAT
5	617	3" COMPACTED AGGREGATE (W/O GUARDRAIL)
	OR	
	SP 627	3" STONE SHOULDER PROTECTION (W/ GUARDRAIL)
6	SP 404A	JOINT SEALER
7	SPECIAL	ASPHALT REJUVENATOR, POLYMER EMULSION
8	606	GUARDRAIL, TYPE MGS, USING LONG STEEL POSTS
9	SP 605	AGGREGATE DRAIN, TYPE I (SEE NOTE 2)
10	SP 605	AGGREGATE DRAIN, TYPE II (SEE NOTE 2)
11	SP 404	6" BITUMINOUS SHOULDER MATERIAL (SEE NOTE 2) (ASPHALT CONCRETE SURFACE COURSE, PG64-22)

NOTES

1. FULL DEPTH SAW CUT OR FULL DEPTH PAVEMENT PLANING OF EXISTING ASPHALT PAVEMENT IS REQUIRED WHERE EXISTING ASPHALT PAVEMENT IS TO BE REMOVED FOR THE INSTALLATION OF EITHER TYPE I OR TYPE II DRAINS.
2. TYPE I AGGREGATE DRAINS WILL BE INSTALLED AS DIRECTED BY THE CHIEF ENGINEER AND ADJACENT TO ALL NEW FULL DEPTH REPAIRS. ADJACENT TO FULL DEPTH REPLACEMENT THE EXISTING TYPE I DRAIN SHALL BE SAW CUT OR PAVEMENT PLANED FULL DEPTH OF SHOULDER; THE EXISTING DRAIN REMOVED AND REPLACED TO THE DEPTH INDICATED HEREON. TYPE II AGGREGATE DRAINS WILL BE INSTALLED AT EACH EXISTING ROADWAY JOINT WITHIN FULL DEPTH REPAIR AREAS, OR AS DIRECTED BY THE CHIEF ENGINEER. (APPROX. SPACING = 61'-6" O/C) SP 404 BITUMINOUS SHOULDER MATERIAL REQUIRED FOR REPAIR OF THE SHOULDER SHALL BE CONSIDERED INCIDENTAL TO SP 605.
3. RATE OF APPLICATION FOR NON-TRACKING TACK COAT MAY BE ADJUSTED BY CHIEF ENGINEER AS NEEDED.
4. SEE EXISTING TYPICAL SECTIONS AND PAVEMENT PLANING DETAILS FOR SHOULDER THICKNESS LIMITS.
5. THE USE OF SLAG OR RAP/MILLINGS FOR ITEM 617, COMPACTED AGGREGATE, IS PROHIBITED.

** SHOULDER WIDTH VARIES 10' TO 26' ± AT EMERGENCY PARKING AREAS. CONTRACTOR TO MATCH EXISTING CONDITIONS IN THESE LOCATIONS.

99-23-0102_GY006-008.dwg; 3/17/24 - 10:51pm

DESIGN AGENCY
LJB Inc. ● 6480 ROCKSIDE WOODS SOUTH SUITE 290
INDEPENDENCE, OH 44131
(440) 593-4204 ● LJBInc.com

NO.	REVISIONS	BY	DATE
1	ADDENDUM NO. 1	DLF	3/18/24

DESIGNED DLF | CHECKED NRW | DRAWN CRB | IN CHARGE JJS

PROPOSED TYPICAL SECTIONS
MP 70.00 TO MP 73.95

PROJECT 59-24-02
DATE: 2/2/24

OHIO TURNPIKE AND INFRASTRUCTURE COMMISSION

ITEM 254 - PAVEMENT PLANING, PORTLAND CEMENT CONCRETE, AS PER PLAN
THIS CONTINGENCY ITEM CONSISTS OF PAVEMENT PLANING OF CONCRETE APPROACH AND/OR ABUTMENT SLABS WITH DIAMOND BLADES ONLY. THIS QUANTITY IS INTENDED TO BE UTILIZED TO MEET PAVEMENT SMOOTHNESS. A QUANTITY OF 5,600 SQ.YD. IS INCLUDED IN THE ESTIMATED QUANTITIES TO BE USED AS DIRECTED BY THE CHIEF ENGINEER OR AS INDICATED IN THE PLANS.

PAYMENT FOR ALL LABOR, EQUIPMENT AND MATERIALS NECESSARY FOR THE ABOVE MENTIONED WORK SHALL BE DEPENDENT ON AND IN ACCORDANCE WITH ITEM 254-PAVEMENT PLANING, PORTLAND CEMENT CONCRETE, AS PER PLAN.

ITEM SPECIAL - PATCHING CONCRETE BRIDGE DECKS, TYPE B
REFER TO ODOT PN 512, DATED 01/15/16. REFER TO ODOT CMS 511 FOR TEMPERATURE REQUIREMENTS DURING PLACEMENT AND CURING.

THIS ITEM SHALL CONSIST OF FURNISHING THE NECESSARY LABOR, MATERIALS, AND EQUIPMENT TO REPAIR, AT THE DIRECTION OF THE CHIEF ENGINEER, THE WEARING SURFACE OF CONCRETE BRIDGE DECKS, ABUTMENT SLABS, AND APPROACH SLABS, INCLUDING THE REMOVAL OF ALL LOOSE AND UNSOUND CONCRETE, BITUMINOUS PATCHES, SURFACE PREPARATION, BONDING COAT AND THE MIXING, PLACING, FINISHING, AND CURING OF THE MORTAR OR CONCRETE PATCHES. THIS ITEM SHALL BE USED AT AREAS DESIGNATED IN THE PLAN OR AS DIRECTED BY THE ENGINEER TO REPAIR ISOLATED POTHOLES AND SCALING OF THE WEARING SURFACE ALONG JOINT ARMOUR, ETC.

MATERIALS SHALL CONFORM TO THE FOLLOWING REQUIREMENTS:
- QUICK SETTING CONCRETE MORTAR - TYPE 1 OR 2, SHALL COMPLY WITH 705.21.
- CURING MATERIALS - TYPE B PATCHES SHALL COMPLY WITH 705.07.
- MATERIALS SHALL BE LISTED ON THE CURRENT ODOT QUALIFIED PRODUCTS LIST.

REMOVAL OF UNSOUND CONCRETE:
THE CONTRACTOR SHALL PROVIDE ALL NECESSARY MATERIAL, EQUIPMENT, LABOR, AND INCIDENTALS TO PERMIT SOUNDING, INSPECTION OF THE DECK AND ABUTMENT SLAB WEARING SURFACES. THE CONTRACTOR'S SUPERINTENDENT SHALL ACCOMPANY THE CHIEF ENGINEER IN MAKING AN EXAMINATION TO MARK THE AREAS OF REPAIRS TO BE MADE. SOUNDING MAY HAVE TO BE DELAYED UNTIL THE DECK IS SUFFICIENTLY DRY TO PERMIT DETECTION OF ALL AREAS OF POTENTIAL DELAMINATION.

THE PERIMETER OF ALL REMOVAL AREAS SHALL BE SAW CUT TO A DEPTH OF 1 INCH TO PRODUCE A VERTICAL OR SLIGHTLY UNDERCUT FACE. ADDITIONAL SAW CUTS MAY BE REQUIRED TO FACILITATE REMOVAL.

ALL UNSOUND CONCRETE INCLUDING ALL PATCHES OTHER THAN SOUND PORTLAND CEMENT CONCRETE AND ALL LOOSE AND DISINTEGRATED CONCRETE, SHALL BE REMOVED. THE UNSOUND CONCRETE MAY BE REMOVED BY CHINPPING OR HAND DRESSING. CHIPPING HAMMERS SHALL NOT BE HEAVIER THAN THE NOMINAL 35 POUND CLASS AND SHALL BE OPERATED AT AN ANGLE OF LESS THAN 45 DEGREES MEASURED FROM THE SURFACE OF THE DECK. CONCRETE SHALL BE REMOVED IN A MANNER THAT PREVENTS CUTTING, ELONGATING, OR DAMAGING REINFORCING STEEL. WHERE THE BOND BETWEEN THE CONCRETE AND A PRIMARY REINFORCING BAR HAS BEEN DESTROYED, OR WHERE MORE THAN ONE HALF OF THE PERIPHERY OF SUCH A BAR HAS BEEN EXPOSED THE ADJACENT CONCRETE SHALL BE REMOVED TO A DEPTH THAT WILL PROVIDE A MINIMUM 3/4 INCH CLEARANCE AROUND THE BAR EXCEPT WHERE OTHER REINFORCING BARS MAKE THIS IMPRACTICAL. REINFORCEMENT WHICH HAS BECOME LOOSE SHALL BE ADEQUATELY SUPPORTED AND TIED BACK INTO PLACE.

AFTER COMPLETION OF THE SECONDARY REMOVAL OPERATIONS, RE-SOUND THE DECK TO ENSURE THAT ONLY SOUND CONCRETE REMAINS.

MINIMIZE CONSTRUCTION JOINTS. CONSTRUCTION JOINTS SHALL ONLY BE PLACED ON THE PERIMETER OF THE REMOVAL AREAS.

SURFACE PREPARATION:
CLEANING SHALL CLOSELY PRECEDE APPLICATION OF THE BONDING GROUT AND/OR THE PATCHING MATERIAL. THE SURFACE TO BE PATCHED AT THE EXPOSED REINFORCING STEEL SHALL BE THOROUGHLY CLEANED BY SANDBLASTING FOLLOWED BY AN AIR BLAST. IT MAY BE NECESSARY TO USE HAND TOOLS TO REMOVE SCALE FROM THE REINFORCING STEEL.

FOR TYPE B PATCHES, THE PREPARED SURFACE SHALL BE SURFACE DRY. ANY ADDITIONAL SURFACE PREPARATION SHALL BE IN ACCORDANCE WITH THE MANUFACTURER'S RECOMMENDATIONS FOR THE PATCHING MATERIAL WHICH IS USED.

BONDING GROUT:
TYPE B PATCHES SHALL BE BONDED ACCORDING TO THE MANUFACTURER'S RECOMMENDATIONS.

PATCHING:
TYPE B PATCHING MATERIAL SHALL BE MADE USING QUICK SETTING CONCRETE MORTAR, TYPE 1 OR 2, 705.21. THE MORTAR SHALL BE MIXED AND PLACED AS PER MANUFACTURER'S RECOMMENDATIONS. COURSE AGGREGATE MAY BE ADDED IN ACCORDANCE WITH THE MANUFACTURER'S INSTRUCTIONS WHEN THE DEPTH OF THE PATCH EXCEEDS 1 INCH.

CURING:
TYPE B PATCHES SHALL BE CURED IN ACCORDANCE WITH THE MANUFACTURER'S RECOMMENDATIONS.

SEALING AROUND REPAIRS:
THE JOINTS AROUND THE REPAIRS SHALL BE SEALED IN ACCORDANCE WITH SP 516B. THE COST OF SEALING THE JOINTS SHALL BE INCIDENTAL TO ITEM SPECIAL-PATCHING CONCRETE BRIDGE DECKS, TYPE B.

MEASUREMENT AND PAYMENT:
THE ACCEPTED QUANTITIES FOR THE COMPLETED WORK AS DESCRIBED WILL BE MEASURED AS THE ACTUAL AREA OF BRIDGE DECK REPAIRED, IRRESPECTIVE OF DEPTH. THE QUANTITY MEASURED SHALL INCLUDE ALL ACCESS, LABOR, TOOLS, MATERIALS, EQUIPMENT AND INCIDENTALS NECESSARY TO PERFORM THE WORK AND SHALL BE PAID FOR UNDER THE FOLLOWING CONTRACT ITEM (PAY ITEM):

1 ITEM SPECIAL - ~~60 SQ.YD.~~ PATCHING CONCRETE BRIDGE DECKS, TYPE B 500 SQ.YD.

FINAL LOCATION OF PATCHING WILL BE PROVIDED TO THE CONTRACTOR BY THE CHIEF ENGINEER PRIOR TO COMMENCING THE PROJECT.

ITEM SPECIAL - ASPHALT REJUVENATOR, POLYMER EMULSION

THIS ITEM SHALL CONSIST OF SUPPLYING AND PLACING APPROXIMATELY 39,000 SQ.YD. OF A POLYMERIZED EMULSION. THE POLYMERIZED EMULSION SHALL BE JOINTBOND AS MANUFACTURED BY D & D EMULSIONS OR APPROVED EQUAL BY THE CHIEF ENGINEER.

FOR THE LONGITUDINAL JOINTS, THE POLYMERIZED EMULSION SHALL BE APPLIED 36" WIDE AND CENTERED ON THE LONGITUDINAL JOINT BETWEEN THE CENTER AND LEFT LANE. THE POLYMERIZED EMULSION SHALL BE PLACED AFTER THE SP 404 SURFACE COURSE IS COMPLETE AND IN PLACE (BOTH LANES PAVED) AND SHALL BE APPLIED TO THE LONGITUDINAL JOINTS IN ACCORDANCE WITH THE MANUFACTURERS RECOMMENDATIONS AND SPECIFICATIONS. CONTRACTOR SHALL ALSO PERFORM ANY MANUFACTURER RECOMMENDED TEST SECTIONS TO VERIFY APPLICATION RATE TO THE NEW PAVEMENT SURFACE AND THE EXISTING PAVEMENT AS WELL. ANY ADJUSTMENTS TO THE APPLICATION RATE WILL BE MADE BY THE MANUFACTURER BASED OF FIELD TESTING RESULTS.

CONTRACTOR SHALL ALSO APPLY THE POLYMER EMULSION PRIOR TO ANY FINAL STRIPING OR RE-STRIPING OPERATIONS.

PAYMENT FOR THIS ITEM SHALL BE AT THE CONTRACT UNIT PRICE PER SQ.YD. FURNISHED INSTALLED AND ACCEPTED BY THE CHIEF ENGINEER, AND SHALL INCLUDE ALL LABOR, EQUIPMENT AND MATERIALS. TEMPORARY TRAFFIC CONTROL, AND INCIDENTALS NECESSARY TO COMPLETE THIS ITEM.

ITEM 606-IMPACT ATTENUATOR, TYPE 2 (UNIDIRECTIONAL), AS PER PLAN
THIS ITEM SHALL CONSIST OF FURNISHING AND INSTALLING THE FOLLOWING IMPACT ATTENUATOR: A QUADGUARD M10 AS MANUFACTURED BY TRINITY HIGHWAY PRODUCTS, LLC OR APPROVED EQUAL.

INSTALLATION SHALL BE AT THE LOCATION SPECIFIED IN THE PLANS, IN ACCORDANCE WITH THE MANUFACTURER'S SPECIFICATIONS AND AS DETAILED IN THE PRE-APPROVED SHOP DRAWINGS FOUND ON ODOT'S ROADWAY APPROVED PRODUCTS LIST FOR PERMANENT OR WORK ZONE IMPACT ATTENUATORS TYPE 2.

PAYMENT FOR THE ABOVE ITEM SHALL BE MADE AT THE UNIT PRICE BID, EACH, FOR ITEM 606-IMPACT ATTENUATOR, TYPE 2 (UNIDIRECTIONAL), AS PER PLAN, AND SHALL INCLUDE ALL LABOR, TOOLS, EQUIPMENT AND MATERIALS NECESSARY TO CONSTRUCT A COMPLETE AND FUNCTIONAL IMPACT ATTENUATOR SYSTEM, INCLUDING ALL RELATED BACKUPS/BACKSTOPS, GUARDRAIL TRANSITIONS, HARDWARE, EXCAVATION AND GRADING, CONCRETE AND FULL DEPTH SAW CUTTING OF EXISTING ASPHALT NOT SEPARATELY SPECIFIED, AS REQUIRED BY THE MANUFACTURER.

ITEM 202 - PORTIONS OF STRUCTURE REMOVED, AS PER PLAN

THE FOLLOWING CONTINGENCY QUANTITY OF 15 EACH OF ITEM 202, PORTIONS OF STRUCTURE REMOVED, AS PER PLAN, HAS BEEN INCLUDED FOR USE AS DIRECTED BY THE CHIEF ENGINEER. THIS ITEM SHALL INCLUDE ALL LABOR AND MATERIALS NECESSARY TO REMOVE THE EXISTING BRIDGE TERMINAL ASSEMBLY, THE EXISTING BRIDGE PARAPET (ASSUME MIN. OF 10', MAX. OF 14') TO THE CONSTRUCTION JOINT AND CONSTRUCT NEW PARAPET TRANSITION AS PER MGS-3.1, MGS-3.2, DGSTR-1, DGSTR-2, DGSTR-3, AND DGSTR-4 TO ACCEPT THE PERTINENT BRIDGE TERMINAL ASSEMBLY AS DETAILED IN THESE PLANS. ANY ADDITIONALLY REQUIRED CONCRETE CURBING AND REINFORCING, AS SPECIFIED BY THE STANDARD DRAWINGS, SHALL BE INSTALLED AS WELL AND CONSIDERED INCIDENTAL TO THIS ITEM.

ALL LABOR, MATERIALS AND EQUIPMENT NECESSARY TO COMPLETE THIS ITEM SHALL BE INCLUDED IN THE PRICE BID FOR ITEM 202 - PORTIONS OF STRUCTURE REMOVED, AS PER PLAN.

DESIGN AGENCY
LJB Inc. ▲ 6480 ROCKSIDE WOODS SOUTH SUITE 290
INDEPENDENCE, OH 44131
(440) 593-4504 ▲ LJBInc.com

DESIGNED	CHECKED	NO.	REVISIONS	BY	DATE
DLF	NRW	1	ADDENDUM NO. 1	DLF	3/18/24
DRAWN	IN CHARGE	-	-	-	-
CRB	JJS	-	-	-	-

GENERAL NOTES

PROJECT 59-24-02
DATE: 2/2/24

12
21

OHIO TURNPIKE AND INFRASTRUCTURE COMMISSION

99-23-0102_GN009-010.dwg: 3/17/24 - 10:50pm

	APPROX. MILEPOST	LANE		SP 451 FULL DEPTH PAVEMENT REPAIRS (ASPHALT)		APPROX. MILEPOST	LANE		SP 451 FULL DEPTH PAVEMENT REPAIRS (ASPHALT)
	EB	RIGHT	CENTER	S.Y.		EB	RIGHT	CENTER	S.Y.
1	63.37	X	X	13.34	31	68.05		X	6.67
2	63.39		X	6.67	32	68.08		X	6.67
3	64.3	X	X	13.34	33	68.09		X	6.67
4	64.32		X	6.67	34	68.63		X	6.67
5	64.51	X		6.67	35	69.39	X		6.67
6	65.04	X		6.67	36	69.68	X		6.67
7	65.07	X		6.67	~~37~~	~~70.05~~	~~X~~	~~X~~	~~13.34~~
8	65.4	X	X	13.34	~~38~~	~~70.53~~		~~X~~	~~6.67~~
9	65.73	X	X	13.34	~~39~~	~~70.87~~	~~X~~		~~6.67~~
10	65.83		X	6.67	~~40~~	~~72.06~~		~~X~~	~~6.67~~
11	65.86		X	6.67	~~41~~	~~72.07~~		~~X~~	~~6.67~~
12	65.88		X	6.67	~~42~~	~~72.13~~		~~X~~	~~6.67~~
13	65.97	X		6.67	~~43~~	~~72.16~~		~~X~~	~~6.67~~
14	66.19	X	X	13.34	~~44~~	~~72.18~~		~~X~~	~~6.67~~
15	66.53		X	6.67	~~45~~	~~72.29~~	~~X~~	~~X~~	~~13.34~~
16	66.65		X	13.34	~~46~~	~~72.3~~	~~X~~	~~X~~	~~13.34~~
17	66.88	X	X	13.34	~~47~~	~~72.39~~	~~X~~	~~X~~	~~13.34~~
18	66.89		X	6.67	~~48~~	~~72.41~~	~~X~~	~~X~~	~~13.34~~
19	66.95	X	X	13.34	~~49~~	~~72.42~~	~~X~~	~~X~~	~~13.34~~
20	67.13		X	6.67	~~50~~	~~72.45~~	~~X~~	~~X~~	~~13.34~~
21	67.17		X	6.67	~~51~~	~~72.46~~	~~X~~	~~X~~	~~13.34~~
22	67.2		X	6.67	~~52~~	~~72.48~~	~~X~~	~~X~~	~~13.34~~
23	67.35	X	X	13.34	~~53~~	~~72.49~~	~~X~~	~~X~~	~~13.34~~
24	67.38	X	X	13.34	~~54~~	~~72.5~~	~~X~~	~~X~~	~~13.34~~
25	67.49	X	X	13.34	~~55~~	~~72.6~~	~~X~~	~~X~~	~~13.34~~
26	67.58	X	X	13.34	~~56~~	~~73.03~~	~~X~~		~~6.67~~
27	67.62		X	6.67	~~57~~	~~73.6~~		~~X~~	~~6.67~~
28	67.96		X	6.67	~~58~~	~~73.61~~	~~X~~	~~X~~	~~13.34~~
29	68.01		X	6.67	~~59~~	~~73.8~~		~~X~~	~~6.67~~
30	68.03		X	6.67	~~60~~	~~73.85~~		~~X~~	~~6.67~~
					~~61~~	~~73.88~~	~~X~~	~~X~~	~~13.34~~
		COLUMN 1 TOTAL		280.14					
							COLUMN 2 TOTAL		40.02

1

	APPROX. MILEPOST	LANE		SP 451 FULL DEPTH PAVEMENT REPAIRS (ASPHALT)		APPROX. MILEPOST	LANE		SP 451 FULL DEPTH PAVEMENT REPAIRS (ASPHALT)
	WB	RIGHT	CENTER	S.Y.		WB	RIGHT	CENTER	S.Y.
1	63.94		X	6.67	~~44~~	~~71.66~~	~~X~~	~~X~~	~~13.34~~
2	64.33		X	6.67	~~45~~	~~71.99~~		~~X~~	~~6.67~~
3	64.51	X		6.67	~~46~~	~~72.05~~	~~X~~	~~X~~	~~13.34~~
4	65.62	X	X	13.34	~~47~~	~~72.14~~	~~X~~	~~X~~	~~13.34~~
5	64.77		X	6.67	~~48~~	~~72.15~~		~~X~~	~~6.67~~
6	64.79		X	6.67	~~49~~	~~72.17~~	~~X~~	~~X~~	~~13.34~~
7	65.08	X	X	13.34	~~50~~	~~72.18~~	~~X~~	~~X~~	~~13.34~~
8	65.11	X	X	13.34	~~51~~	~~72.22~~		~~X~~	~~6.67~~
9	65.39	X	X	13.34	~~52~~	~~72.31~~		~~X~~	~~6.67~~
10	65.75		X	6.67	~~53~~	~~72.33~~		~~X~~	~~6.67~~
11	66.12	X		6.67	~~54~~	~~72.35~~	~~X~~	~~X~~	~~13.34~~
12	66.24		X	6.67	~~55~~	~~72.38~~	~~X~~	~~X~~	~~13.34~~
13	66.69		X	6.67	~~56~~	~~72.01~~	~~X~~	~~X~~	~~13.34~~
14	67.95		X	13.34	~~57~~	~~72.65~~	~~X~~	~~X~~	~~13.34~~
15	68.33		X	6.67	~~58~~	~~72.67~~	~~X~~	~~X~~	~~13.34~~
16	68.34	X	X	13.34	~~59~~	~~72.69~~	~~X~~	~~X~~	~~13.34~~
17	68.44	X	X	13.34	~~60~~	~~72.72~~	~~X~~	~~X~~	~~13.34~~
18	68.58		X	6.67	~~61~~	~~72.23~~	~~X~~	~~X~~	~~13.34~~
19	68.67	X	X	13.34	~~62~~	~~72.8~~	~~X~~		~~6.67~~
20	68.93	X		6.67	~~63~~	~~73.02~~		~~X~~	~~6.67~~
21	69.7	X		6.67	~~64~~	~~73.03~~		~~X~~	~~6.67~~
22	69.71	X		6.67	~~65~~	~~73.1~~	~~X~~	~~X~~	~~13.34~~
23	69.75	X		6.67	~~66~~	~~73.16~~	~~X~~	~~X~~	~~13.34~~
24	69.91	X	X	13.34	~~67~~	~~73.19~~	~~X~~		~~6.67~~
~~25~~	~~70.35~~	~~X~~	~~X~~	~~13.34~~	~~68~~	~~73.2~~	~~X~~		~~6.67~~
~~26~~	~~70.43~~	~~X~~		~~6.67~~	~~69~~	~~73.21~~	~~X~~	~~X~~	~~13.34~~
~~27~~	~~70.45~~	~~X~~		~~6.67~~	~~70~~	~~73.22~~	~~X~~		~~6.67~~
~~28~~	~~70.47~~	~~X~~		~~6.67~~	~~71~~	~~73.23~~	~~X~~	~~X~~	~~13.34~~
~~29~~	~~70.49~~	~~X~~		~~6.67~~	~~72~~	~~73.24~~	~~X~~		~~6.67~~
~~30~~	~~70.52~~	~~X~~	~~X~~	~~13.34~~	~~73~~	~~73.29~~	~~X~~		~~6.67~~
~~31~~	~~70.58~~	~~X~~		~~6.67~~	~~74~~	~~73.3~~	~~X~~		~~6.67~~
~~32~~	~~70.6~~	~~X~~	~~X~~	~~13.34~~	~~75~~	~~73.36~~	~~X~~		~~6.67~~
~~33~~	~~70.73~~		~~X~~	~~13.34~~	~~76~~	~~73.37~~	~~X~~		~~6.67~~
~~34~~	~~70.74~~		~~X~~	~~6.67~~	~~77~~	~~73.38~~	~~X~~		~~6.67~~
~~35~~	~~70.76~~		~~X~~	~~6.67~~	~~78~~	~~73.4~~	~~X~~		~~6.67~~
~~36~~	~~71.08~~	~~X~~	~~X~~	~~13.34~~	~~79~~	~~73.43~~	~~X~~		~~6.67~~
~~37~~	~~71.22~~	~~X~~		~~6.67~~	~~80~~	~~73.45~~	~~X~~	~~X~~	~~13.34~~
~~38~~	~~71.24~~		~~X~~	~~6.67~~	~~81~~	~~73.48~~	~~X~~	~~X~~	~~13.34~~
~~39~~	~~71.28~~		~~X~~	~~6.67~~	~~82~~	~~73.5~~	~~X~~		~~6.67~~
~~40~~	~~71.55~~	~~X~~	~~X~~	~~13.34~~	~~83~~	~~73.86~~	~~X~~	~~X~~	~~13.34~~
~~41~~	~~71.62~~	~~X~~	~~X~~	~~13.34~~	~~84~~	~~73.87~~	~~X~~	~~X~~	~~13.34~~
~~42~~	~~71.63~~	~~X~~	~~X~~	~~13.34~~	~~85~~	~~73.88~~	~~X~~	~~X~~	~~13.34~~
~~43~~	~~71.64~~	~~X~~	~~X~~	~~13.34~~	~~86~~	~~73.9~~	~~X~~	~~X~~	~~13.34~~
		COLUMN 3 TOTAL		220.11			~~COLUMN 4 TOTAL~~		~~440.22~~
							COLUMN 3 TOTAL		220.11
							COLUMN 2 TOTAL		40.02
							COLUMN 1 TOTAL		280.14
								TOTAL	540.27

1

99-23-0102_GS014-016.dwg; 3/17/24 - 10:52pm

DESIGN AGENCY
JJI
LJB Inc. 4649 ROCKSIDE WOODS SOUTH SUITE 290
INDEPENDENCE, OH 44131
(440) 593-4504 ▲ LJBInc.com

NO.	REVISIONS	BY	DATE
1	ADDENDUM NO. 1	DLF	3/18/24
-	-	-	-
-	-	-	-

DESIGNED	CHECKED
DLF	NRW
DRAWN	IN CHARGE
CRB	JJS

FULL DEPTH PAVEMENT REPAIR SUBSUMMARY

PROJECT 59-24-02
DATE: 2/2/24

19
21

OHIO TURNPIKE

OHIO TURNPIKE AND INFRASTRUCTURE COMMISSION

	ESTIMATED QUANTITY			ITEM DESCRIPTION
	ITEM	TOTAL	UNIT	
	IB. ART. 6	1.00	LUMP	PREMIUM FOR CONTRACT PERFORMANCE BOND AND PAYMENT BOND
*	202	15.00	EACH	PORTIONS OF STRUCTURES REMOVED, AS PER PLAN
	202	63075.00	FOOT	GUARDRAIL REMOVED
	202	470.00	FOOT	PIPE REMOVED, 24" AND UNDER
	202	9.00	EACH	HEADWALL REMOVED
*	SP 202B	100.00	CU. YD.	CRACK REPAIR, 1" OR LESS, USING SAND ASPHALT
*	SP 202B	5000.00	GALLON	CRACK REPAIR, 1" OR LESS, USING HOT JOINT SEALER
*	SP 202B	100.00	CU. YD.	CRACK REPAIR, WIDER THAN 1" AND LESS THAN 1' IN DEPTH, USING SP404 (PG 64-22)
*	SP 202B	100.00	CU. YD.	CRACK REPAIR, WIDER THAN 1" AND GREATER THAN 1' IN DEPTH, USING SP404 (PG 64-22)
*	SP 202B	100.00	CU. YD.	3 CORNER CRACK REPAIR, USING SP 402 (PG 64-22)
*	SP 202B	100.00	CU. YD.	REPAIR EXISTING EXPANSION JOINT, USING SP 404 (PG 64-22)
*	204	125.00	CU. YD.	EXCAVATION OF SUBGRADE
*	204	125.00	CU. YD.	EMBANKMENT
*	204 1	750.00	CU. YD.	SUBGRADE COMPACTION
**	254	400000.00	SQ. YD.	PAVEMENT PLANING, ASPHALT CONCRETE (T=2")
	254	197600.00	SQ. YD.	PAVEMENT PLANING, ASPHALT CONCRETE (T=3")
*	254	5600.00	SQ. YD.	PAVEMENT PLANING, PORTLAND CEMENT CONCRETE, AS PER PLAN
*	304	125.00	CU. YD.	AGGREGATE BASE
**	SP 402	9900.00	CU. YD.	ASPHALT CONCRETE INTERMEDIATE COURSE, USING CRUSHED STONE, PG 76-22(FR)
	SP 403	3060.00	CU. YD.	ASPHALT CONCRETE LEVELING COURSE, USING CRUSHED STONE, PG 76-22(FR)
**	SP 404	14600.00	CU. YD.	ASPHALT CONCRETE SURFACE COURSE, USING CRUSHED STONE, PG 64-22
	SP 404	11910.00	CU. YD.	ASPHALT CONCRETE SURFACE COURSE, USING CRUSHED SLAG, PG 76-22(FR)
**	SP 404A	291750.00	FOOT	JOINT SEALER
**	407 1	73400.00	GALLON	NON-TRACKING TACK COAT
	SP 451	540.27	SQ. YD.	FULL DEPTH PAVEMENT REPAIRS (ASPHALT)
	SP 536	64230.00	SQ. YD.	CONCRETE WEATHERPROOFING, DECK, ABUTMENT SLABS AND APPROACH SLABS
	SP 536	7666.00	SQ. YD.	CONCRETE WEATHERPROOFING, PARAPETS
	601	10.00	CU. YD.	ROCK CHANNEL PROTECTION, TYPE C WITH FILTER FABRIC
	SP 605	2850.00	FOOT	AGGREGATE DRAINS, TYPE II
	606	61625.00	FOOT	GUARDRAIL, TYPE MGS, USING LONG STEEL POSTS
	606	38.00	EACH	ANCHOR ASSEMBLY, MGS TYPE T, USING LONG STEEL POSTS
	606	38.00	EACH	MGS BRIDGE TERMINAL ASSEMBLY, TYPE 1, USING LONG STEEL POSTS
	606	29.00	EACH	MGS BRIDGE TERMINAL ASSEMBLY, TYPE 2, USING LONG STEEL POSTS
	606	1.00	EACH	IMPACT ATTENUATOR, TYPE 2 (UNIDIRECTIONAL)
	SP 606A	45.00	EACH	ANCHOR ASSEMBLY, MGS TYPE E
	609	65500.00	FOOT	ASPHALT CONCRETE CURB, TYPE I, PG 64-22
**	SP 611	155.00	EACH	CATCH BASIN RECONSTRUCTED TO GRADE, LESS THAN 4", AS PER PLAN
**	SP 611	34.00	EACH	CATCH BASIN RECONSTRUCTED TO GRADE, 4" - 12", AS PER PLAN
**	SP 611	6.00	EACH	CATCH BASIN RECONSTRUCTED TO GRADE, GREATER THAN 12", AS PER PLAN
	SP 611	470.00	FOOT	15" CONDUIT, TYPE F, 707.33
*	SP 611	5.00	EACH	CATCH BASIN FRAME AND GRATE, AS PER PLAN

	ESTIMATED QUANTITY			ITEM DESCRIPTION
	ITEM	TOTAL	UNIT	
	SP 614	1.00	LUMP	MAINTAINING TRAFFIC, AS PER PLAN
	SP 614ZP	5220.00	HOURS	ZONE PERSON WITH ZONE VEHICLE
	SP 614A	3.00	MILE	TEMPORARY REMOVAL OF EXISTING PAVEMENT MARKING
	SP 614C	2.28	MILE	REMOVAL OF PAVEMENT MARKING
*	614	125.00	CU. YD.	ASPHALT CONCRETE FOR MAINTAINING TRAFFIC, AS PER PLAN
	614	18.72	MILE	WORK ZONE EDGE LINE, CLASS 1, 740.02, TYPE 1
	614	18.72	MILE	WORK ZONE LANE LINE, CLASS 1, 740.02, TYPE 1
	614	14880.00	FOOT	WORK ZONE CHANNELIZING LINE, CLASS 1, 740.02, TYPE 1
	614	18080.00	FOOT	WORK ZONE CHANNELIZING LINE, CLASS 1, 740.06, TYPE 1
*	617	21560.00	SQ. YD.	SHOULDER PREPARATION
*	617	1800.00	CU. YD.	COMPACTED AGGREGATE
*	617	125.00	M. GAL.	WATER
	619	1.00	LUMP	FIELD OFFICE, AS PER PLAN
	621	2508.00	EACH	RAISED PAVEMENT MARKER REMOVED
	SP 621	2508.00	EACH	RAISED PAVEMENT MARKER
	SP 623	1.00	LUMP	CONSTRUCTION LAYOUT SURVEY
	624	1.00	LUMP	MOBILIZATION
*	SP 626	695.00	EACH	BARRIER REFLECTOR, TYPE A (WHITE)
*	SP 626	135.00	EACH	BARRIER REFLECTOR, TYPE B (WHITE)
	SP 626	5560.00	EACH	BARRIER REFLECTOR, TYPE B (YELLOW)
	SP 626A	2000.00	EACH	CONSTRUCTION ZONE MARKERS, ONE WAY MODEL
*	SP 627	2428.00	CU. YD.	STONE SHOULDER PROTECTION
**	642	50.84	MILE	6" WHITE LANE LINE , TYPE 1
**	642	26.42	MILE	6" WHITE EDGE LINE, TYPE 1
**	642	26.42	MILE	6" YELLOW EDGE LINE, TYPE 1
	642	4000.00	FOOT	12" WHITE CHANNELIZING LINE, TYPE 1
	642	3900.00	FOOT	DOTTED LINE, 6", WHITE, TYPE 1
	SP 808	154.00	SIGN MONTH	DIGITAL SPEED LIMIT (DSL) SIGN ASSEMBLY
	SPECIAL	2.28	MILE	SNAP MILL AND FILL
	SPECIAL	35.70	MILE	SONIC NAP ALERT PATTERN (SNAP)
	SPECIAL	10.00	EACH	AIR SPEED ZONE MARKINGS, AS PER PLAN
	SPECIAL	10.00	EACH	SPEED MEASUREMENT MARKINGS, AS PER PLAN
*	SPECIAL	500.00	SQ. YD.	PATCHING CONCRETE BRIDGE DECKS, TYPE B
	SPECIAL	29130.00	SQ. YD.	REGRADING UNDER GUARDRAIL
	SPECIAL	5.00	EACH	EXISTING CROSSOVER TO BE CLOSED/RE-OPENED, AS PER PLAN
	SPECIAL	10.00	EACH	SECURING MANHOLE LID
*	SPECIAL	39000.00	SQ. YD.	ASPHALT REJUVENATOR, POLYMER EMULSION

* CONTINGENCY QUANTITY TO BE USED AS DIRECTED BY CHIEF ENGINEER (SEE GENERAL NOTES).

** PORTION OF THIS ITEM IS CONTINGENCY QUANTITY (SEE PLANS AND GENERAL NOTES).

99-23-0102_GS014-016.dwg; 3/18/24 - 2:20pm

DESIGN AGENCY
LJB Inc. 6480 ROCKSIDE WOODS SOUTH SUITE 290
INDEPENDENCE, OH 44131
(440) 593-4504 LJBInc.com

REVISIONS			
NO.		BY	DATE
1	ADDENDUM NO. 1	DLF	3/18/24
-	-	-	-
-	-	-	-

DESIGNED	CHECKED	NO.
DLF	NRW	1
DRAWN	IN CHARGE	-
CRB	JJS	-

ESTIMATED QUANTITIES

PROJECT 59-24-02
DATE: 2/2/24

20
21

OHIO TURNPIKE AND INFRASTRUCTURE COMMISSION