OHIO TURNPIKE COMMISSION

THE JAMES W. SHOCKNESSY OHIO TURNPIKE

CONTRACT 43-97-14
THIRD LANE CONSTRUCTION
M.P. 185.32 TO MP. 187.43
STATION 701+00 TO STATION 91+00.00
SUMMIT COUNTY
PORTAGE COUNTY

INDEX OF SHEETS

TITLE SHEET. 1
SURVEY CONTROL PLAN 2
SCHEMATIC PLAN. 3
TYPICAL SECTIONS 4–5
GENERAL NOTES 6–9
MAINTENANCE OF TRAFFIC. 10–36
GENERAL SUMMARY. 37–41
CALCULATIONS AND SUBSUMMARIES 42–49
STORM WATER POLLUTION PREVENTION PLAN. 50
PLAN & PROFILE. 51–60
PAVEMENT ELEVATION TABLES. 61–65
MEDIAN WALL PLANS AND ELEVATIONS 66–68
CROSS SECTIONS. 69–87
INERTIA BARRIER DETAILS. 87A
DRAINAGE DETAILS. 88–95
TRAFFIC CONTROL 96–103
STRUCTURES. 104–143
SOIL PROFILE

OHIO TURNPIKE COMMISSION STANDARD DRAWINGS

AS–1	1–24–97
AS–2	1–24–97
CB–3	6–25–97
CB–4	6–25–97
CB–5	6–25–97
CBM–2	6–25–97
CBM–3	8–6–97
CBM–4	7–11–97
CBM–5	7–11–97
CBR–1	6–25–97
CBR–3	8–6–97
CJ–1	7–11–97
CJ–2	4–18–97
DJ–1	6–25–97
DJ–2	6–25–97
DJ–5	6–25–97
DR–1	1–1–97
F–1	4–18–97
GR–1	8–4–97
JB–1	1–1–97
MCC–1	1–1–97
MCC–2	1–1–97
RPM–1	8–4–97
TC–1	6–25–97
TC–2	6–25–97
TCB–1	7–11–97
TCB–2	6–25–97
TCR–1	1–29–97
TCR–2	6–11–97
TCR–9	6–11–97
TCR–10	6–11–97
TCR–11	12–30–96
TCR–12	6–11–97
TCR–13	1–1–97
TCR–14	5–22–97
UD–1	1–1–97
XOV–3	1–1–97

CB-1 1-1-97 △1

FIBER OPTIC CABLE AS-BUILT DRAWINGS

LCI COMMUNICATIONS CORP. SHEET NOS. 1, 2, 20 33, 233, 234 & 235

OHIO DEPARTMENT OF TRANSPORTATION STANDARD DRAWINGS

BP–3.1	2–21–92	MC–9.3	10–30–92	TC–42.10	8–19–77
CB–4	11–10–83	MC–9.4	10–30–92	TC–51.11	9–30–94
F–2	5–1–76	MC–11	8–1–78	TC–51.12	1–3–94
F–6	5–1–76	TC–7.65	3–1–79	HL–20.11	5–1–87
GR–1.1	5–6–91	TC–12.30	1–20–84	HL–30.11	5–1–87
GR–1.2	10–30–92	TC–21.10	9–1–92	HL–60.11	5–1–87
GR–1.3	2–21–92	TC–21.20	9–1–92	~~BS–1–93~~	~~12–15–54~~
GR–2.1	5–6–91	TC–21.40	9–1–92	FB–1–82	5–10–82
GR–3.1	5–6–91	TC–22.10	9–1–92.	RB–1–55	2–2–59
GR–4.2	5–6–91	TC–22.20	9–1–92		
GR–8.1	1–31–94	TC–31.21	9–1–92		
MC–1	6–13–69	TC–32.10	9–1–92		
MC–4	7–26–76	TC–32.11	9–1–92		
MC–5	6–12–75	TC–41.20	6–21–94		
MC–9.1	10–30–92	TC–41.40	6–18–79		

△1

2 WORKING DAYS
BEFORE YOU DIG
Call...800–362–2764 (Toll Free)
OHIO UTILITIES PROTECTION SERVICE

CALL JAYTEL – (419) 884–0400
(LCI FIBER OPTIC CABLE)

OHIO TURNPIKE DIVISION SUPERINTENDENT
(419) 862–2922
(ROADWAY LIGHTING CABLE)

STATION EQUATION: STA. 721+40.00 BACK = STA. 0+00 AHEAD

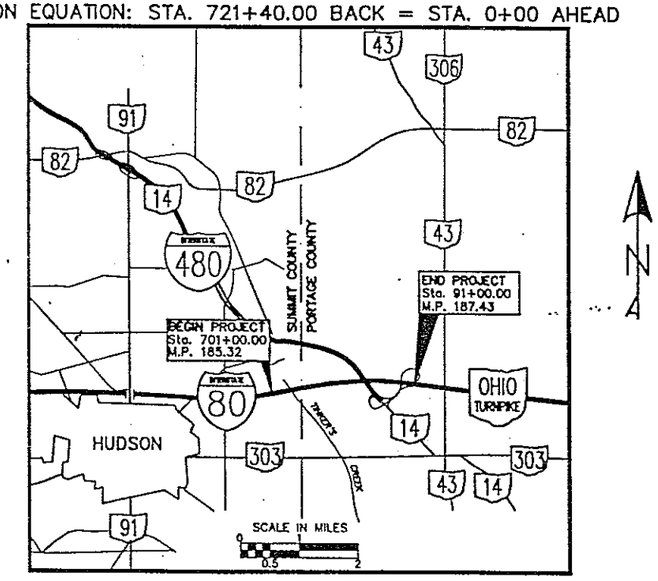

SCALES

PLAN 0 50

PROFILE HORIZONTAL 0 50 VERTICAL 0 10

CROSS SECTIONS HORIZONTAL 0 10 VERTICAL 0 10

APPROVED FOR
THE OHIO TURNPIKE COMMISSION
BY
CHIEF ENGINEER
9/25/97
DATE

RECOMMENDED FOR APPROVAL
BY
URS GREINER, INC.
REVIEW CONSULTANT
9-3-97
DATE

ANDREW S. BARR
REGISTERED
36478
STATE OF OHIO
PROFESSIONAL ENGINEER

PLANS PREPARED BY

BARR ENGINEERING, INC.
FIVE EAST LONG STREET EIGHTH FLOOR
COLUMBUS, OHIO 43215
TEL. 614/224-1941 FAX 614/224-0807

DESIGN CONTRACT NO. 71-95-40

PLOTTED VIEW = PL...
XREF(S) = NONE
XREF(P) = NONE

PLOT SCALE = 1=1
CADI F:\OTC\SHARED\TNHCTI.DWG AUGUST-08-1997

SURVEY CONTROL PLAN

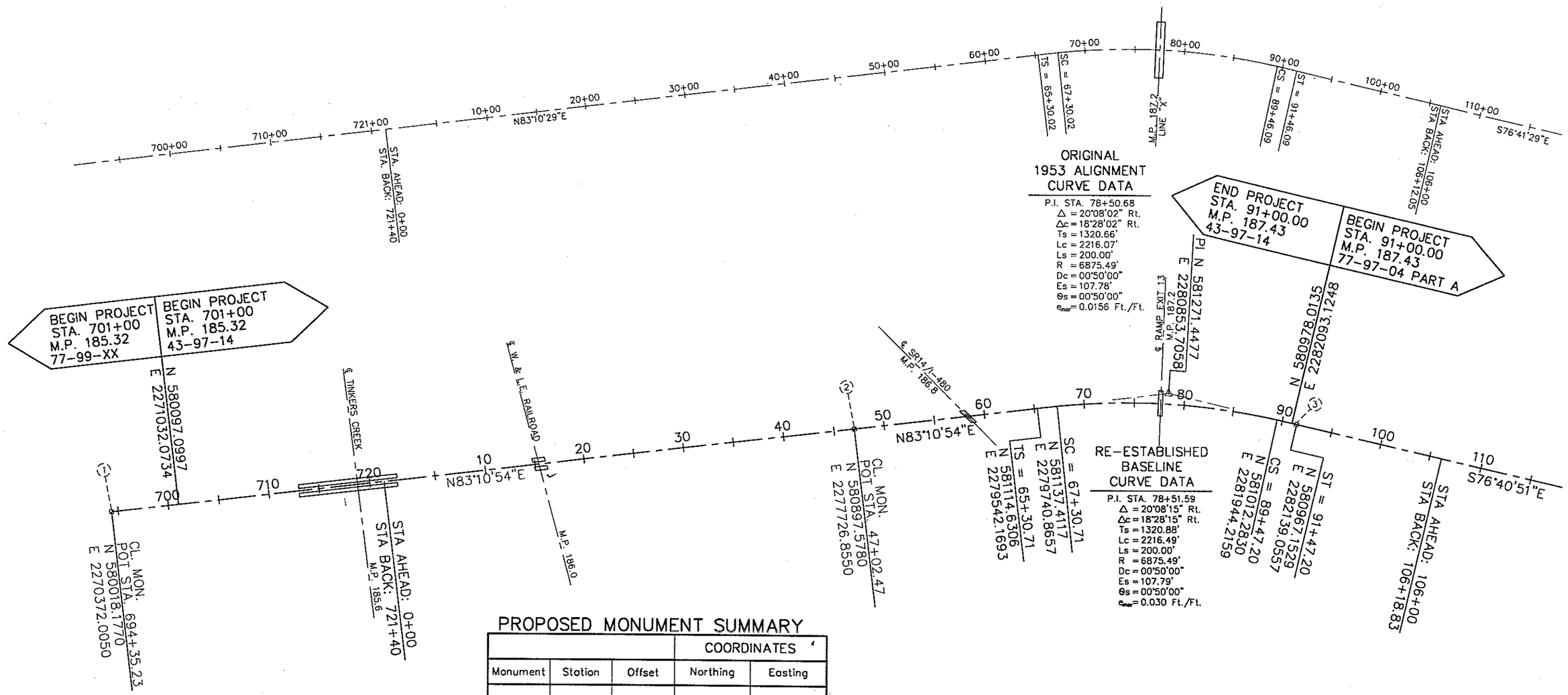

EXISTING MONUMENT SUMMARY

Monument	Station	Offset	COORDINATES Northing	COORDINATES Easting
1	694+35.23	℄	580018.177	2270372.005
2	47+02.47	℄	580897.578	2277726.855
3	91+46.09	℄	580967.408	2282137.978

NOTE: Station & Offsets of Existing Monuments From Re-Established Baseline.

PROPOSED MONUMENT SUMMARY

Monument	Station	Offset	COORDINATES Northing	COORDINATES Easting
1	710+00.00	5.00' Rt.	580198.9848	2271926.3019
2	5+00.00	5.00' Rt.	580393.6884	2273554.7012
3	14+50.00	5.00' Rt.	580506.4744	2274497.9844
4	25+00.00	5.00' Rt.	580631.1321	2275540.5564
5	35+00.00	5.00' Rt.	580749.8540	2276533.4839
6	45+00.00	5.00' Rt.	580868.5759	2277526.4115
7	55+00.00	5.00' Rt.	580987.2978	2278519.3391
8	65+30.71	5.00' Rt.	581109.6660	2279542.7629
9	67+30.71	5.00' Rt.	581132.4390	2279741.3870
10	78+50.00	5.00' Rt.	581158.2017	2280858.3279
11	89+47.20	5.00' Rt.	581007.4012	2281943.1349
12	91+47.20	5.00' Rt.	580962.2874	2282137.9038

NOTE: See Plan And Profile Sheets For Pay Quantities.

NOTES

Existing Monuments To Be Destroyed

Coordinate Values Are In Ohio State Plane System, Based On NAD 83. Scale Factor = 0.99988913

Graphic Scale
0' 500' 1000'

NO.	REVISIONS	BY	DATE

OHIO TURNPIKE COMMISSION

OHIO TURNPIKE 3rd LANE CONSTRUCTION
SURVEY CONTROL PLAN

URS Greiner

DESIGNED: ZB	CHECKED: JAN	DATE: 8-01-96
DRAWN: JAN	IN CHARGE: ZB	SCALE: 1"=500'

CONTRACT 43-97-14 SHEET 2 OF 143

DESIGN CONTRACT 71-95-40

DESIGNED BY:	CHECKED BY: JAN
DATE: 8/01/96	DATE: 8/01/96
DRAWN BY: JAN	REVISED BY:
DATE: 8/01/96	DATE:
CAD FILE NAME: 7026102\96DESIGN\71-95-35\SURVEY.TK	

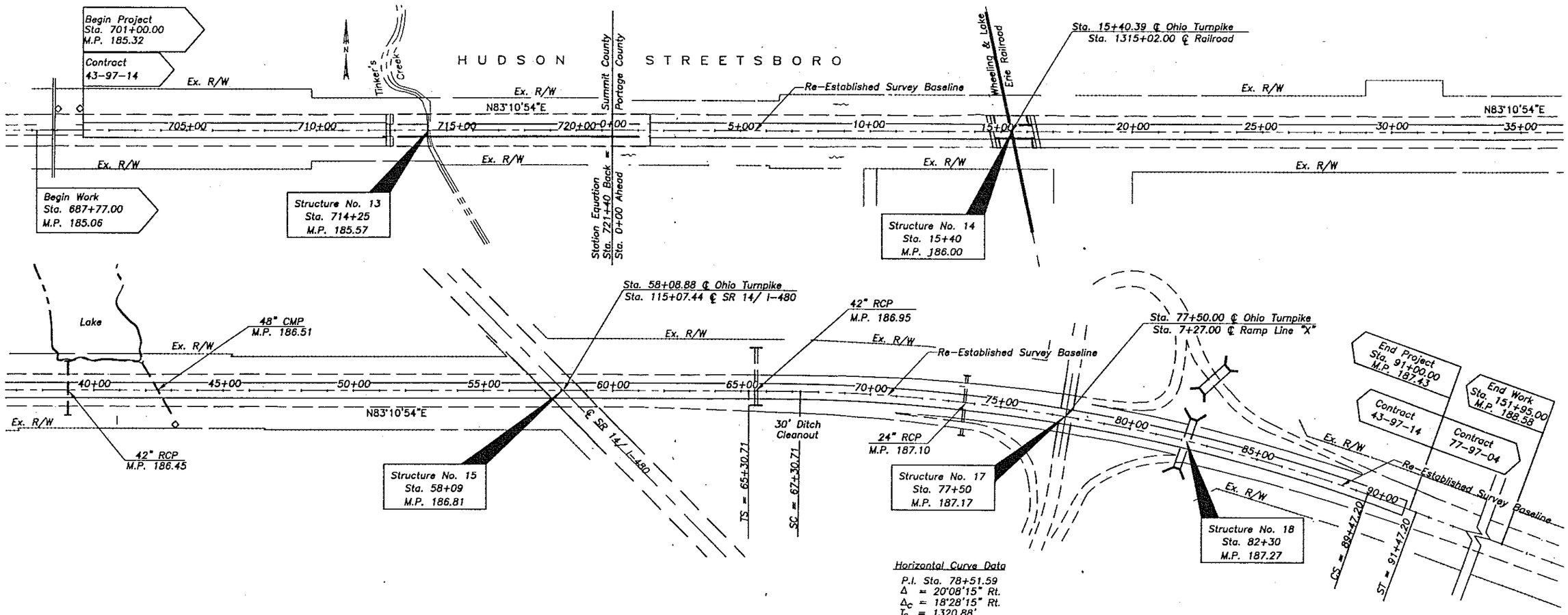

Horizontal Curve Data

P.I. Sta. 78+51.59
Δ = 20°08'15" Rt.
Δ_c = 18°28'15" Rt.
T_s = 1320.88'
L_c = 2216.49'
L_s = 200.00'
R = 6875.49'
D_c = 00°50'00"
E_s = 107.79'
θ_s = 00°50'00"
e_{max} = 0.030 ft/ft

NO.	REVISIONS	BY	DATE

OHIO TURNPIKE COMMISSION

SCHEMATIC PLAN

PLANS PREPARED BY:
BARR ENGINEERING, INC.

DESIGNED: BLG	CHECKED: MJH	DATE: 8/7/97
DRAWN: BYR	IN CHARGE: BLG	SCALE: 1"=200'

CONTRACT 43-97-14 SHEET 3 OF 143

DESIGNED BY: BLG
DATE: 8/7/97
DRAWN BY: BYR
DATE: 8/7/97
SCH41

CHECKED BY: MJH
DATE: 8/7/97
REVISED BY:
DATE:

PLOTTED VIEW = PLAN
XREF's = NONE
XREF's = NONE

PLOT SCALE = 1=1
BLG-P168 F:\OTC\ROADWAY\SCH41.DWG AUGUST-07-1997

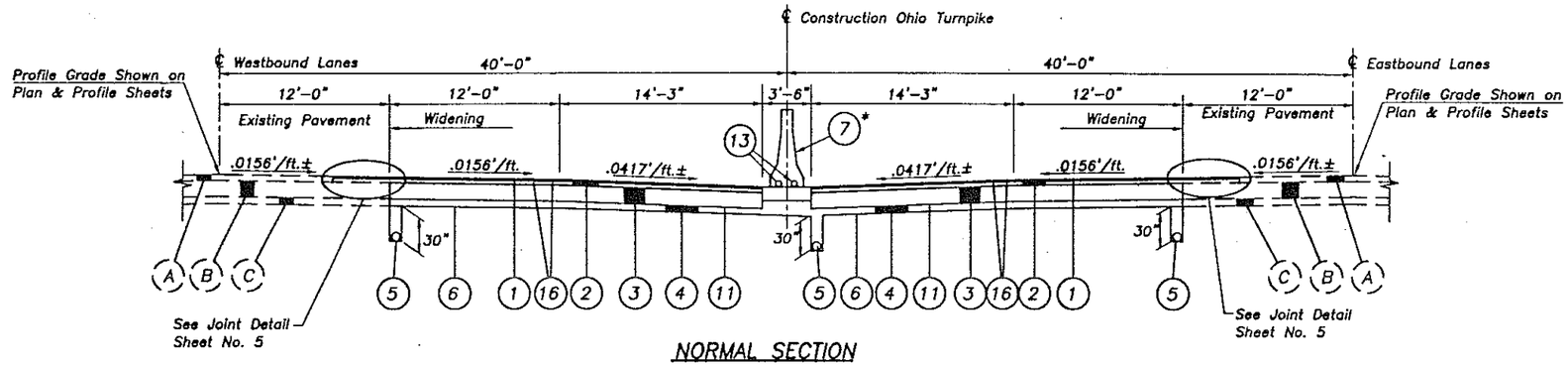

NORMAL SECTION

Section Applies
Sta. 701+00.00 to Sta. 712+66.14 WB
Sta. 701+00.00 to Sta. 712+68.06 EB
Sta. 1+46.04 to Sta. 14+56.94 WB
Sta. 1+46.54 to Sta. 14+56.94 EB
Sta. 16+38.48 to Sta. 65+00.00

* Omit for Maintenance Crossover
Sta. 62+27.00 to Sta. 64+07.00

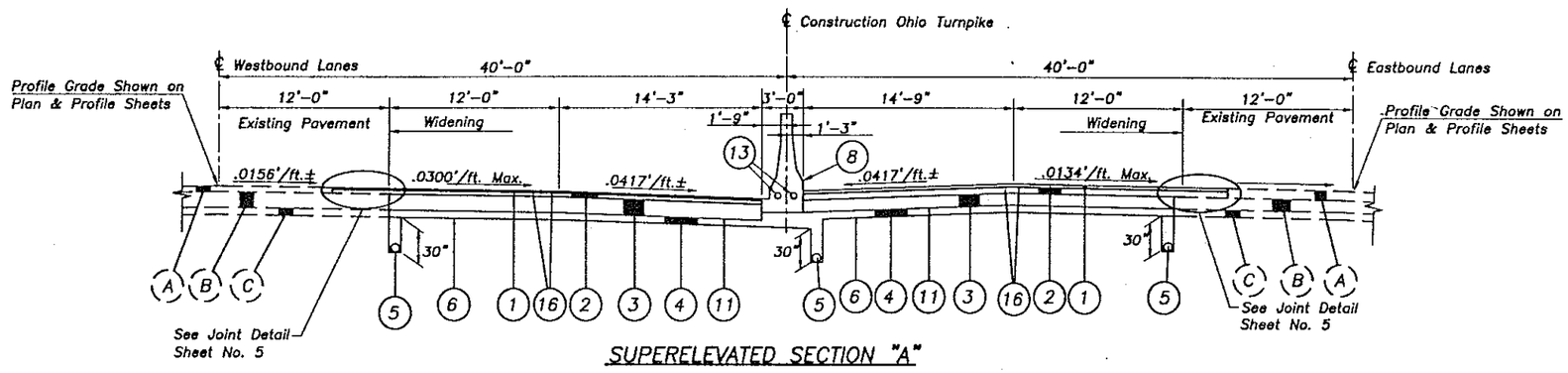

SUPERELEVATED SECTION "A"

Section Applies
Sta. 65+00.00 to Sta. 66+20.00
Sta. 90+00.00 to Sta. 91+00.00

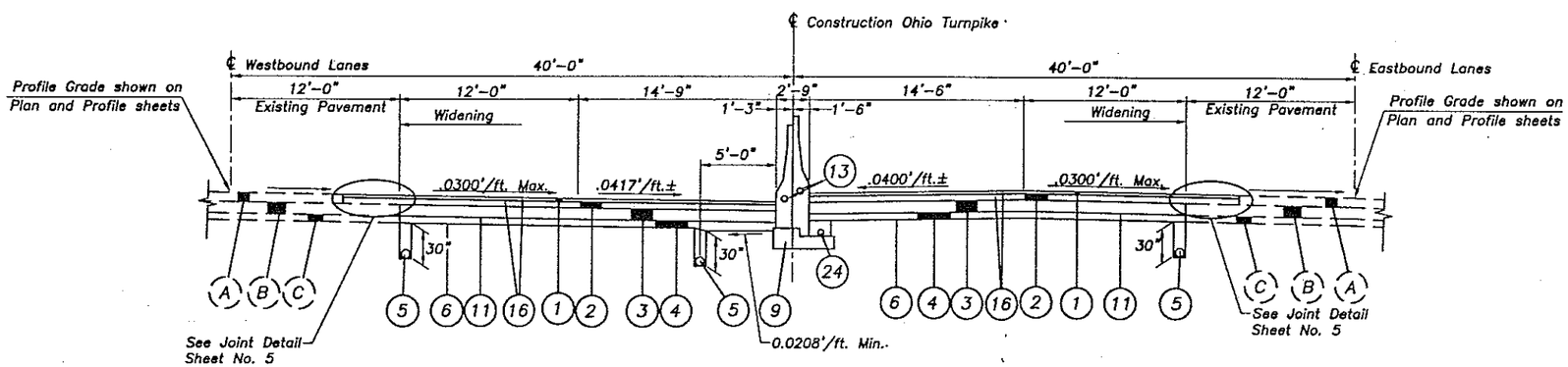

SUPERELEVATED SECTION "B"

Section Applies:
Sta. 66+20.00 to Sta. 90+00.00

For Notes, See Sheet No. 5

PROPOSED LEGEND

1. ITEM SP404 – 1 1/4" ASPHALT CONCRETE SURFACE COURSE, USING CRUSHED SLAG, PG64-28
2. ITEM SP402 – 3 3/4" ASPHALT CONCRETE BASE COURSE OR RECYCLED ASPHALT CONCRETE BASE COURSE, PG64-28 (PLACED IN TWO LIFTS)
3. ITEM SP302 – 10" BITUMINOUS AGGREGATE BASE, PG64-22
4. ITEM SP304 – 6" AGGREGATE BASE
5. ITEM SP605 – 6" SHALLOW PIPE UNDERDRAIN, 707.15 WITH FABRIC WRAP
6. ITEM 203 – SUBGRADE COMPACTION
7. ITEM 622 – CONCRETE BARRIER, TYPE B-50, AS PER PLAN
8. ITEM 622 – CONCRETE BARRIER, TYPE C-50, AS PER PLAN
9. ITEM SP622C – MEDIAN WALL (2 FOOT DESIGN)
10. ITEM SP407 – TACK COAT (APPLICATION RATE 0.1 GAL/SY)
11. ITEM SP408 – PRIME COAT (APPLICATION RATE 0.4 GAL/SY)
12. ITEM SP611 – CLASS S CONCRETE, APPROACH SLAB, USING SHRINKAGE COMPENSATING CEMENT, (T = 12")
13. ITEM SP625 – CONDUIT WITH MULTI-CELL INNERDUCT
14. ITEM SP302 – 4" BITUMINOUS AGGREGATE BASE, PG64-22
15. ITEM SP304 – VARIABLE DEPTH AGGREGATE BASE
16. ITEM SP407 – INTERMEDIATE TACK COAT (APPLICATION RATE 0.06 GAL/SY – SEE NOTE 3, SHEET 5)
17. ITEM SP617 – RECONDITIONING SHOULDERS (TO BE USED WITHOUT GUARDRAIL)
18. ITEM SP627 – STONE SHOULDER PROTECTION (TO BE USED WITH GUARDRAIL)
19. ITEM SP402 – 1 3/4" ASPHALT CONCRETE BASE COURSE OR RECYCLED ASPHALT CONCRETE BASE COURSE, PG 64-28
20. ITEM SPECIAL – ASPHALT PAVEMENT REINFORCEMENT
21. ITEM SP202 – GUARDRAIL REMOVED FOR REUSE
22. ITEM SP606 – GUARDRAIL REBUILT, TYPE 5
23. ITEM SP609 – ASPHALT CONCRETE CURB, PG64-22, STANDARD TYPE I
24. 6" DIA. PERFORATED CORRUGATED PLASTIC PIPE (INCLUDED WITH ITEM SP622C)
25. ITEM 254 – PAVEMENT PLANING, BITUMINOUS (DEPTH VARIES – SEE SECTION)

EXISTING LEGEND

- (A) 5"± ASPHALT CONCRETE
- (B) 10" REINFORCED CONCRETE PAVEMENT
- (C) 6" AGGREGATE BASE
- (D) 9" ASPHALT CONCRETE
- (E) GUARDRAIL
- (F) AGGREGATE DRAIN
- (G) ASPHALT CURB
- (H) 8"± ASPHALT CONCRETE
- (J) BASE
- (K) APPROACH SLAB

NO.	REVISIONS	BY	DATE

OHIO TURNPIKE COMMISSION

TYPICAL SECTIONS

PLANS PREPARED BY:
BARR ENGINEERING, INC.

DESIGNED: BLG	CHECKED: MJH	DATE: 8/7/97
DRAWN: BYR	IN CHARGE: BLG	SCALE: N.T.S.

CONTRACT 43-97-14 SHEET 4 OF 143

PLOT SCALE = 1:64
BLG-P186 F:\OTC\SHARED\TNMCY1.DWG AUGUST-07-1997

PLOTTED VIEW = PLAN
XREF(S) = NONE
XREF(S) = NONE

DESIGNED BY: B'	CHECKED BY: MJH
DATE: 8/7/97	DATE: 8/7/97
DRAWN BY: BYR	REVISED BY:
DATE: 8/7/97	DATE:
TNMCY1	

FOR EXISTING AND PROPOSED LEGENDS, SEE SHEET NO. 4.

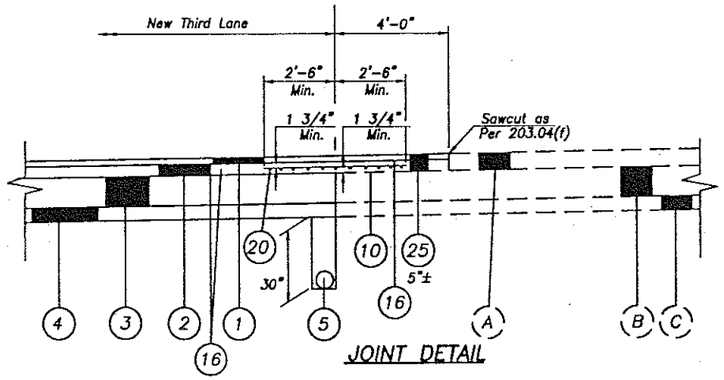

JOINT DETAIL

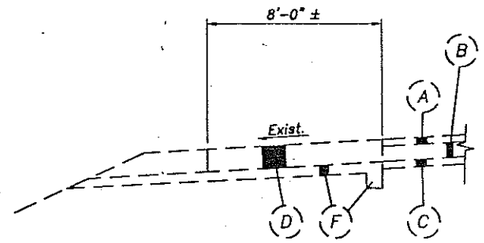

EXISTING SECTION
MEDIAN SHOULDER

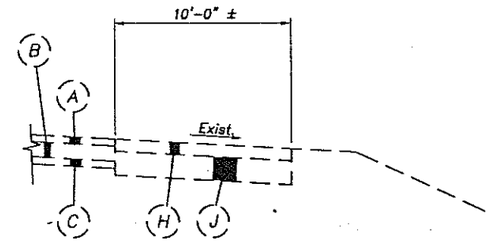

EXISTING SECTION
OUTSIDE SHOULDER

NOTES

1. The 3rd Lane Widening shall be constructed relative to the existing edge of pavement. Variations in actual width of the median shall be adjusted equally to the shoulders. The cross slope of the median shoulder in a normal section, may vary so that the eastbound and westbound elevations at the median barrier will be the same.
2. For elevations, see Pavement Elevation Tables, Sheet Nos. 61–65.
3. An intermediate tack coat shall be applied between all lifts and courses of SP402 and SP404.
4. For milling and repaving details for Sta. 91+00.00 to Sta. 91+20.00 see Sheet No. 49.

BRIDGE LIMITS

Sta. 712+83.06 to Sta. 1+31.04
Sta. 14+72.27 to Sta. 16+23.15

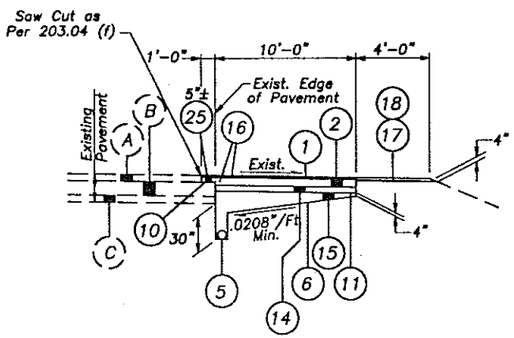

FULL DEPTH SHOULDER REPLACEMENT

Sta. 3+50.00 to Sta. 8+50.00 EB

NOTE:
For items not shown, see Full Depth Shoulder Section

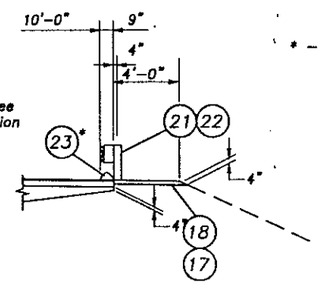

FULL DEPTH SHOULDER REPLACEMENT WITH GUARDRAIL

* – Asphalt curb locations are shown on the Plan and Profile Sheets.

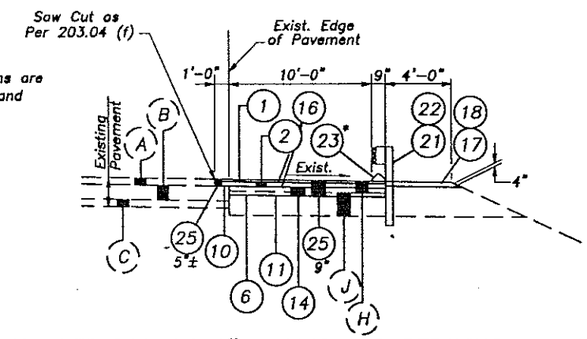

SHOULDER REPAIRS 9" MILLING AND REPAVING

Sta. 687+77.00 to Sta. 712+66.14 WB
Sta. 687+77.00 to Sta. 712+68.06 EB
Sta. 1+46.54 to Sta. 3+50.00 EB
Sta. 1+46.04 to Sta. 14+46.64 WB
Sta. 8+50.00 to Sta. 14+67.78 EB
Sta. 16+51.10 to Sta. 19+15.00 EB
Sta. 16+29.23 to Sta. 19+15.00 WB

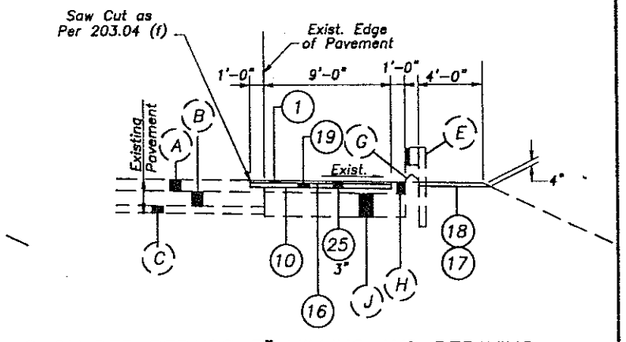

SHOULDER REPAIRS 3" MILLING AND REPAVING

Sta. 19+15.00 to Sta. 65+30.71 EB
Sta. 19+15.00 to Sta. 77+00.00 WB
Sta. 71+00.00 to Sta. 78+00.00 EB

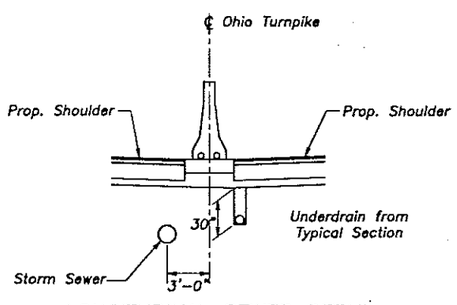

LONGITUDINAL SEWER DETAIL

Sta. 711+24 to Sta. 712+58
Sta. 1+56 to Sta. 1+96
Sta. 39+09 to Sta. 41+17
Sta. 46+00 to Sta. 56+00
Sta. 65+05 to Sta. 65+85

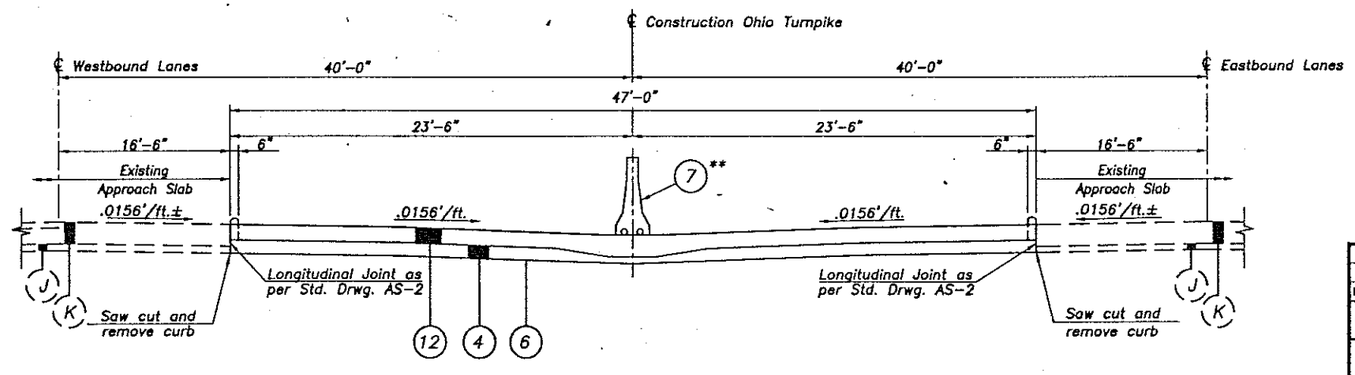

APPROACH SLAB – NORMAL SECTION

Sta. 712+66.14 to Sta. 712+83.06 WB
Sta. 712+68.06 to Sta. 712+83.06 EB
Sta. 1+31.04 to Sta. 1+46.04 WB
Sta. 1+31.04 to Sta. 1+46.54 EB
Sta. 14+56.94 to Sta. 14+72.27
Sta. 16+23.15 to Sta. 16+38.48

** – Transition from Type B–50 Barrier to Bridge Barrier throughout the length of the approach slab.

NO.	REVISIONS	BY	DATE

OHIO TURNPIKE COMMISSION

TYPICAL SECTIONS

PLANS PREPARED BY:
BARR ENGINEERING, INC.

DESIGNED: BLG	CHECKED: MJH	DATE: 8/7/97
DRAWN: BYR	IN CHARGE: BLG	SCALE: N.T.S.

CONTRACT 43-97-14 SHEET 5 OF 143

DESIGNED BY: BLG
DATE:
DRAWN BY: BYR
DATE:
CHECKED BY: MJH
E: 8/7/97
REVISED BY:
DATE:
TNKCT2

PLOTTED VIEW = PLAN
XREF(#) = NONE
XREF(#) = NONE

PLOT SCALE = 1=64
BLG-P186 F:\OTC\SHARED\TNKCT2.DWG AUGUST-07-1997

ROADWAY – GENERAL NOTES

GENERAL

CONSTRUCTION SPECIFICATIONS

THE STATE OF OHIO, DEPARTMENT OF TRANSPORTATION, CONSTRUCTION AND MATERIALS SPECIFICATIONS DATED JANUARY 1, 1995, AND THE SPECIAL PROVISIONS CONTAINED IN THE CONTRACT DOCUMENTS SHALL GOVERN THIS PROJECT.

COOPERATION BETWEEN CONTRACTORS

THE CONTRACTOR SHALL CONDUCT HIS WORK SO AS NOT TO INTERFERE WITH OR HINDER THE PROGRESS OR COMPLETION OF THE WORK BEING PERFORMED BY OTHER CONTRACTORS.

ROUNDING

THE ROUNDING AT SLOPE BREAKPOINTS SHOWN ON THE TYPICAL SECTIONS APPLY TO ALL CROSS-SECTIONS EVEN THOUGH SHOWN OTHERWISE.

UTILITIES

LISTED BELOW ARE ALL UTILITIES LOCATED WITHIN THE PROJECT LIMITS TOGETHER WITH THEIR RESPECTIVE OWNERS:

TELEPHONE:

AT&T COMMUNICATIONS - DENVER
JAROME BOYK (CLEVELAND)
2535 E 40 TH AV
DENVER CO 80205-3601
800-852-3786

MCI TELECOMMUNICATIONS
RAY LEGGIT (FIELD ENGINEER)
7000 WESON PARKWAY
CARY NC 27513
800-624-9675

LCI INTERNATIONAL (LITEL)
JAYARAM BORAIAH
2770 LEXINGTON AVENUE
PO BOX 3168
MANSFIELD OH 44904
419-884-0400

SANITARY:

CITY OF HUDSON - ELEC/WATER/SEWER
CITY OF HUDSON VILLAGE
95 OWEN BROWN ST. SERVICE BUILDING
HUDSON OH 44230
216-342-1728

SUMMIT COUNTY ENVIRONMENTAL DEPT.
GINO J. MORELL
25 N MAIN ST
2535 E 40 TH AV
AKRON OH 44308
330-643-2485

PETROLEUM:

ERIE & HUDSON DEVLOPMENT COMPANY
WALTER C. GILBERT
209 S. CHESTNUT STREET, SUITE 205
RAVENNA OH 44266
330-297-7100

LIGHTING AND COMMUNICATIONS:

OHIO TURNPIKE COMMISSION
JOHN GLOVA
P.O. BOX 149
RAVENNA OH 44266
330-527-2169

THE LOCATION OF THE UNDERGROUND UTILITIES SHOWN ON THE PLANS ARE AS OBTAINED FROM THE OWNERS, AS REQUIRED BY SECTION 153.64 O.R.C.

LCI INTERNATIONAL FIBER OPTIC CABLE

EXTREME CARE MUST BE TAKEN BY THE CONTRACTOR TO PRESERVE AND PROTECT THE FIBER OPTIC CABLE DURING ALL PHASES OF CONSTRUCTION. SPECIAL CARE SHALL BE EXERCISED DURING THE EXISTING STRUCTURE REMOVAL AND NEW STRUCTURE CONSTRUCTION. THE EXISTING FIBER OPTIC CABLE LOCATED WITHIN THE MEDIAN WILL BE ABANDONED PRIOR TO CONSTRUCTION OF THIS PROJECT, AND A NEW FIBER OPTIC CABLE WILL BE INSTALLED. THE NEW CABLE LOCATION IS DEPICTED ON THE PLAN AND PROFILE SHEETS. ANY EXCAVATION ADJACENT TO THE NEW CABLE FOR ANY REASON SHALL NOT BE PERFORMED WITHOUT LITEL FIRST LOCATING THE CABLE. AFTER THE CABLE HAS BEEN LOCATED BY LITEL, THE CONTRACTOR SHALL EXCAVATE TO WITHIN 12" OF THE CABLE DEPTH AS PROVIDED. LITEL REPRESENTATIVES WILL THEN HAND DIG TO EXPOSE THE CABLE.

MCI TELECOMMUNICATIONS FIBER OPTIC CABLE

EXTREME CARE MUST BE TAKEN BY THE CONTRACTOR TO PRESERVE AND PROTECT THE FIBER OPTIC CABLE DURING ALL PHASES OF CONSTRUCTION. SPECIAL CARE SHALL BE EXERCISED DURING THE EXISTING STRUCTURE REMOVAL AND NEW STRUCTURE CONSTRUCTION. THE EXISTING FIBER OPTIC CABLE LOCATED WITHIN THE MEDIAN WILL BE ABANDONED PRIOR TO CONSTRUCTION OF THIS PROJECT, AND A NEW FIBER OPTIC CABLE WILL BE INSTALLED. THE NEW CABLE LOCATION IS DEPICTED ON THE PLAN AND PROFILE SHEETS. ANY EXCAVATION ADJACENT TO THE NEW CABLE FOR ANY REASON SHALL NOT BE PERFORMED WITHOUT MCI FIRST LOCATING THE CABLE. AFTER THE CABLE HAS BEEN LOCATED BY MCI, THE CONTRACTOR SHALL EXCAVATE TO WITHIN 12" OF THE CABLE DEPTH AS PROVIDED. MCI REPRESENTATIVES WILL THEN HAND DIG TO EXPOSE THE CABLE.

AT&T COMMUNICATIONS FIBER OPTIC CABLE

EXTREME CARE MUST BE TAKEN BY THE CONTRACTOR TO PRESERVE AND PROTECT THE FIBER OPTIC CABLE DURING ALL PHASES OF CONSTRUCTION. SPECIAL CARE SHALL BE EXERCISED DURING THE EXISTING STRUCTURE REMOVAL AND NEW STRUCTURE CONSTRUCTION. ANY EXCAVATION ADJACENT TO THE EXISTING CABLE FOR ANY REASON SHALL NOT BE PERFORMED WITHOUT AT&T FIRST LOCATING THE CABLE. AFTER THE CABLE HAS BEEN LOCATED BY AT&T, THE CONTRACTOR SHALL EXCAVATE TO WITHIN 12" OF THE CABLE DEPTH AS PROVIDED. AT&T REPRESENTATIVES WILL THEN HAND DIG TO EXPOSE THE CABLE.

CONTINGENCY QUANTITIES

THE CONTRACTOR SHALL NOT ORDER MATERIALS OR PERFORM WORK FOR ITEMS DESIGNATED BY PLAN NOTE TO BE USED "AS DIRECTED BY THE ENGINEER" UNLESS AUTHORIZED BY THE ENGINEER. THE ACTUAL WORK LOCATIONS AND QUANTITIES USED FOR SUCH ITEMS SHALL BE INCORPORATED INTO THE FINAL CHANGE ORDER GOVERNING COMPLETION OF THIS PROJECT.

TEMPORARY STREAM CROSSING FORDS

WHERE STREAM CROSSING FORDS ARE REQUIRED FOR EQUIPMENT CROSSING, THE CROSSING SHALL CONSIST OF CLEAN-NON-TOXIC GRANULAR OR ROCK MATERIAL, PROPERLY MAINTAINED TO PREVENT EROSION, WITH PROVISIONS FOR CONVEYANCE OF ANTICIPATED HIGH FLOWS, AND SHALL NOT IMPEDE THE MOVEMENT OF AQUATIC LIFE. CONSTRUCTION SHALL BE IN ACCORDANCE WITH PART 330, APPENDIX A, SPECIFIC CATEGORIES OF DISCHARGES-NATIONALLY PERMITTED, PARAGRAPH A14, MINOR ROAD CROSSING FILLS, THE FEDERAL REGISTER - CORPS OF ENGINEERS FINAL REGULATIONS, CURRENT EDITION.

ELEVATION DATUM

ALL ELEVATIONS ARE BASED ON THE NATIONAL GEODETIC VERTICAL DATUM OF 1929 (NGVD29).

WORK LIMITS

THE WORK LIMITS SHOWN ON THESE PLANS ARE FOR PHYSICAL CONSTRUCTION ONLY. THE INSTALLATION AND OPERATION OF ALL TEMPORARY TRAFFIC CONTROL MEASURES REQUIRED BY THESE PLANS SHALL BE PROVIDED BY THE CONTRACTOR WHETHER INSIDE OR OUTSIDE THESE WORK LIMITS.

AS-BUILT INFORMATION

THE ORIGINAL 1953 AS-BUILT CONSTRUCTION PLANS INCLUDING CROSS SECTIONS, STANDARD DRAWINGS, AND SPECIFIC STANDARD DRAWINGS ARE AVAILABLE FOR INSPECTION BY PROSPECTIVE BIDDERS AT THE OFFICES OF URS GREINER, 564-A WHITE POND DRIVE, AKRON, OHIO, 44320. TELEPHONE (330) 836-9111.

ROADWAY

BUILD TO MEET EXISTING CONDITIONS

THE PROPOSED PAVEMENT SHALL BE CONSTRUCTED ADJACENT TO THE EXISTING PAVEMENT EDGE AND MATCH THE EXISTING ELEVATION. EXISTING PAVEMENT LOCATION AND ELEVATION INFORMATION SHOWN IN THE PLANS WAS OBTAINED FROM THE ORIGINAL AS-BUILT DRAWINGS AND IS PROVIDED FOR INFORMATION ONLY.

SLIGHT HORIZONTAL AND/OR VERTICAL ADJUSTMENTS TO ACCOMMODATE THE EXISTING FIELD CONDITIONS SHALL BE APPROVED BY THE ENGINEER.

ITEM 201 - CLEARING AND GRUBBING

SECTION 201.04 OF THE SPECIFICATIONS IS AMENDED AS FOLLOWS:

THE LUMP SUM BID FOR ITEM 201 - CLEARING AND GRUBBING SHALL INCLUDE ALL EXCAVATION AND EMBANKMENT REQUIRED FOR THE REPLACEMENT OF MATERIALS REMOVED IN THE SCALPING OPERATIONS. NO ADDITIONAL PAYMENT FOR ITEM 203 - EXCAVATION NOT INCLUDING EMBANKMENT CONSTRUCTION OR ITEM 203 - EMBANKMENT MAY BE CLAIMED. PAYMENT FOR EARTHWORK QUANTITIES WILL BE BASED ON MEASUREMENTS FROM THE EXISTING GROUND LINE TO THE PLAN LINES AS SHOWN ON THE CROSS SECTIONS.

ITEM 604-MONUMENT ASSEMBLY

MONUMENTS SHALL BE CONSTRUCTED IN ACCORDANCE WITH ODOT STANDARD CONSTRUCTION DRAWING MC-1 AND AT THE LOCATIONS SHOWN ON THE SURVEY CONTROL PLAN, SHEET 2. MONUMENTS REFERENCED TO THE OHIO STATE PLANE COORDINATE SYSTEM AS SHOWN ON THE SURVEY CONTROL PLAN SHALL BE USED TO LOCATE A CENTERLINE POINT. THE MONUMENTS SHALL BE OFFSET A DISTANCE OF FIVE (5) FEET FROM THE CENTERLINE AND LOCATED SOUTH OF CENTERLINE IN THE EASTBOUND LANE MEDIAN SHOULDER. THE CONTRACTOR SHALL ESTABLISH TEMPORARY HORIZONTAL REFERENCES AND CONTROL BEFORE REMOVING EXISTING MONUMENTS. ALL MONUMENTS SHALL BE SET BY A PROFESSIONAL SURVEYOR LICENSED IN THE STATE OF OHIO.

ITEM 203 - PROOF ROLLING

AN ESTIMATED QUANTITY FOR THIS ITEM HAS BEEN PROVIDED IN THE GENERAL SUMMARY FOR USE AS DIRECTED BY THE ENGINEER.

ITEM 203 - PROOF ROLLING 25 HOUR

GUARDRAIL BEHIND CURBS

WHERE A CURB IS PROVIDED AT THE OUTER EDGE OF THE PAVED SHOULDER, ANY NECESSARY GUARDRAIL SHALL BE POSITIONED SO THAT THE FACE OF THE GUARDRAIL SHALL BE ALIGNED VERTICALLY WITH THE FACE OF CURB AND THE TOP OF THE RAIL SHALL BE 27" ABOVE THE GUTTER LINE.

PRECAST FLARED END SECTIONS

WHERE ITEM SPECIAL - PRECAST FLARED END SECTIONS ARE CALLED FOR ON THE PLANS TO BE CONNECTED TO METAL PIPE, A MASONRY COLLAR AS PER ODOT STANDARD DRAWING MC-4 SHALL BE USED. COST OF MASONRY COLLAR SHALL BE INCLUDED IN THE UNIT PRICE BID FOR THE VARIOUS COB ITEMS.

NO.	REVISIONS	BY	DATE
1	ADD NOTE	DSB	9/97

OHIO TURNPIKE COMMISSION

GENERAL NOTES
ROADWAY

PLANS PREPARED BY:
BARR ENGINEERING, INC.

DESIGNED: BLG	CHECKED: MJH	DATE: 8/7/97
DRAWN: CLH	IN CHARGE: BLG	SCALE: N.T.S.

CONTRACT 43-97-14 SHEET 6 OF 143

PLOT SCALE = 1:1
BLG-PT06 F:\OTC\ROADWAY\RGENALL.DWG AUGUST-07-1997

PLOTTED VIEW = PLAN
XREF = NONE

DATE: 8/7/97	DATE: 8/7/97	
DRAWN BY: CLH	REVISED BY:	
DATE: 8/7/97	D.	
REGDUL		

ROADWAY — GENERAL NOTES

ADDITIONAL SOIL INFORMATION

THE SOIL PROFILE AND/OR STRUCTURE FOUNDATION INVESTIGATION SHEETS CONTAIN AVAILABLE SOIL AND BEDROCK INFORMATION. ADDITIONAL INFORMATION MAY ALSO BE AVAILABLE FROM THE FOLLOWING:

1. SUBSURFACE INVESTIGATION REPORT(S) PREPARED FOR THE PROJECT.

2. ADDITIONAL SUBSURFACE INVESTIGATIONS MADE TO STUDY SOME ASPECT OF THE PROJECT.

   THIS INFORMATION SHALL BE AVAILABLE FOR INSPECTION BY PROSPECTIVE BIDDERS AT THE OFFICES OF URS GREINER 564-A WHITE POND DRIVE, AKRON, OHIO 44320, TELEPHONE: (330) 836-9111.

CONNECTION BETWEEN EXISTING AND PROPOSED GUARDRAIL

WHEN IT IS NECESSARY TO SPLICE PROPOSED GUARDRAIL TO EXISTING GUARDRAIL, ONLY THE EXISTING GUARDRAIL SHALL BE CUT, DRILLED, OR PUNCHED. THE CONNECTION SHALL BE MADE USING A "W-BEAM RAIL SPLICE" AS SHOWN ON ODOT STANDARD CONSTRUCTION DRAWING GR-1.1. PAYMENT SHALL BE INCLUDED IN THE CONTRACT PRICE FOR THE RESPECTIVE GUARDRAIL ITEMS.

GUARDRAIL REPLACEMENT

NO HAZARD SHALL BE LEFT UNPROTECTED EXCEPT FOR THE ACTUAL TIME NECESSARY TO REMOVE, GRADE, AND REINSTALL GUARDRAIL IN A CONTINUOUS OPERATION. THE REMOVAL OF ALL GUARDRAIL SHALL AT ALL TIMES BE AS DIRECTED BY THE ENGINEER. NO GUARDRAIL SHALL BE REMOVED UNTIL THE REPLACEMENT MATERIAL IS ON THE SITE, READY FOR INSTALLATION. FAILURE TO COMPLY WITH THIS REQUIREMENT SHALL BE DEEMED SUFFICIENT CAUSE TO ORDER WORK SUSPENDED ON THIS PROJECT UNTIL SUCH TIME THAT THE ENGINEER IS ASSURED OF SAID COMPLIANCE.

ITEM 622 - CONCRETE BARRIER, TYPE B-50, AS PER PLAN

IN LIEU OF THE CURING COMPOUNDS SPECIFIED IN SECTION 622.07 OF THE SPECIFICATIONS, A CLEAR, CURING/SEALING COMPOUND SHALL BE USED. THE CURING/SEALING COMPOUND SHALL DRY TO A CLEAR FINISH. APPLICATION SHALL BE AS PER THE RECOMMENDATIONS OF THE MANUFACTURER. THE CONTRACTOR SHALL SUBMIT TECHNICAL DATA FOR THE CURING/SEALING COMPOUND TO THE ENGINEER FOR APPROVAL. THE COST OF THE CURING/SEALING COMPOUND SHALL BE INCLUDED IN THE UNIT PRICE BID FOR ITEM 622 - CONCRETE BARRIER, TYPE B-50, AS PER PLAN. ALL OTHER PROVISIONS OF SECTION 622 OF THE SPECIFICATIONS SHALL APPLY.

ITEM 622 - CONCRETE BARRIER, TYPE C-50, AS PER PLAN

ITEM 622 - CONCRETE BARRIER, TYPE C-50, AS PER PLAN SHALL BE CONSTRUCTED IN ACCORDANCE WITH ODOT STANDARD CONSTRUCTION DRAWINGS NO. MC-9.3 AND MC-9.4, OTC STANDARD DRAWING CBR-3, AND SECTION 622 OF THE SPECIFICATIONS. PAYMENT FOR ALL MATERIALS AND LABOR SHALL BE INCLUDED IN THE UNIT PRICE BID FOR ITEM 622 - CONCRETE BARRIER, TYPE C-50, AS PER PLAN.

ITEM 622 - CONCRETE BARRIER, TYPE D, AS PER PLAN

ITEM 622 - CONCRETE BARRIER, TYPE D, AS PER PLAN SHALL BE CONSTRUCTED IN ACCORDANCE WITH ODOT STANDARD CONSTRUCTION DRAWING NO. MC-9.3 AND OTC STANDARD DRAWING CBR-1, AND SECTION 622 OF THE SPECIFICATIONS. PAYMENT FOR ALL MATERIALS AND LABOR SHALL BE INCLUDED IN THE UNIT PRICE BID FOR ITEM 622 - CONCRETE BARRIER, TYPE D, AS PER PLAN.

ITEM 622 - PORTABLE CONCRETE BARRIER, 32", AS PER PLAN

ITEM 622 - PORTABLE CONCRETE BARRIER, 32", AS PER PLAN SHALL BE CONSTRUCTED IN ACCORDANCE WITH ODOT STANDARD CONSTRUCTION DRAWING NO. MC-9.2 AND OTC STANDARD DRAWING XOV-3, AND SECTION 622 OF THE SPECIFICATIONS. PAYMENT FOR ALL MATERIALS AND LABOR SHALL BE INCLUDED IN THE UNIT PRICE BID FOR ITEM 622 - PORTABLE CONCRETE BARRIER, 32", AS PER PLAN.

ITEM SPECIAL - INERTIA BARRIER REMOVED

ITEM SPECIAL - INERTIA BARRIER REMOVED SHALL CONSIST OF REMOVING THE EXISTING INERTIA BARRIER AT STA. 91+20. PAYMENT FOR ALL MATERIALS AND LABOR SHALL BE INCLUDED IN THE UNIT PRICE BID FOR ITEM SPECIAL - INERTIA BARRIER REMOVED.

ITEM SPECIAL - WOVEN FABRIC

ITEM SPECIAL - WOVEN FABRIC SHALL CONSISIT OF PLACING WOVEN FABRIC FOR THE REMEDIATION OF SOFT SUBGRADE CONDITIONS AS DIRECTED BY THE ENGINEER. THE FABRIC SHALL MEET THE REQUIREMENTS OF SECTION 712.09, TYPE D OF THE ODOT CONSTRUCTION AND MATERIALS SPECIFICATIONS. PAYMENT FOR ALL MATERIALS AND LABOR SHALL BE INCLUDED IN THE UNIT PRICE BID FOR ITEM SPECIAL - WOVEN FABRIC.

EXTRA LONG GUARDRAIL POSTS

THE FOLLOWING QUANTITY IS INCLUDED IN THE GENERAL SUMMARY FOR USE AS DIRECTED BY THE ENGINEER FOR EXTRA LONG GUARDRAIL POSTS TO BE USED IN CONJUNCTION WITH SPECIAL PROVISION SP 606.

ITEM SP 606 - GUARDRAIL POST, STEEL, 9 FT.	100 EACH

ITEM SPECIAL - PIPE CLEANOUT, OVER 36"

WHERE SPECIFIED IN THE PLANS, THE EXISTING CONDUIT SHALL BE CLEANED OUT. THIS WORK SHALL CONSIST OF THE REMOVAL OF ALL MATERIAL FROM THE INSIDE OF THE EXISTING CULVERT. THE MATERIAL REMOVED SHALL BE DISPOSED OF IN ACCORDANCE WITH THE REQUIREMENTS OF 203.05.

THE FOOTAGE TO BE PAID FOR SHALL BE THE ACTUAL NUMBER OF LINEAR FEET OF EXISTING PIPE CLEANED OUT.

THE FOOTAGE, MEASURED AS PROVIDED ABOVE, SHALL BE PAID FOR AT THE CONTRACT UNIT PRICE BID PER LINEAR FOOT FOR ITEM SPECIAL - PIPE CLEANOUT, OVER 36", WHICH PRICE AND PAYMENT SHALL CONSTITUTE FULL COMPENSATION FOR REMOVAL AND DISPOSAL OF ALL MATERIAL FOUND IN THE PIPE AND THE FURNISHING OF ALL MATERIALS, LABOR, EQUIPMENT AND INCIDENTALS NECESSARY TO COMPLETE THIS ITEM.

SOFT SUBGRADE

THE FOLLOWING ESTIMATED QUANTITIES ARE INCLUDED IN THE GENERAL SUMMARY FOR USE AS DIRECTED BY THE ENGINEER FOR THE REMEDIATION OF SOFT SUBGRADE.

ITEM 203 - EXCAVATION NOT INCLUDING EMBANKMENT CONSTRUCTION	5000 CU. YD.
ITEM 203 - EMBANKMENT	5000 CU. YD.
ITEM SPECIAL - GEOGRID	15000 SQ. YD.
ITEM SP 205 - CEMENT MODIFIED SUBGRADE	22000 SQ. YD.
ITEM SP 205 - CEMENT	1100 TON
ITEM SP 205 - LIME MODIFIED SUBGRADE	22000 SQ. YD.
ITEM SP 205 - LIME	1100 TON
ITEM SP 205 - WATER	100 M. GAL.
ITEM SPECIAL - WOVEN FABRIC	15000 SQ. YD.

ITEM 203 - DITCH CLEANOUT

THIS ITEM SHALL CONSIST OF REGRADING SECTIONS OF EXISTING DITCHES AS DESIGNATED ON THE PLANS. REGRADING WORK SHALL CONSIST OF EARTH EXCAVATION AND EMBANKMENT WORK NECESSARY TO REGRADE THE DITCH TO THE ALIGNMENT SHOWN ON THE PLANS AND MEETING THE EXISTING DITCH ALIGNMENT ON EACH END. REGRADING WORK SHALL TYPICALLY CONSIST OF ELIMINATING SEDIMENT BUILD-UP AREAS, WASHOUTS, AND ALIGNMENT IRREGULARITIES AND SHALL BE SUBJECT TO THE LIMITS DESIGNATED BY THE ENGINEER. CLEARING AND GRUBBING SHALL BE REQUIRED AT THESE LOCATIONS AND SHALL BE PAID FOR UNDER ITEM 201. SURPLUS OR UNSUITABLE MATERIAL, AS DETERMINED BY THE ENGINEER, SHALL BE DISPOSED OF AS PER SP 108. EMBANKMENT REQUIRED FOR WASHOUTS SHALL MEET THE REQUIREMENTS OF SECTION 203.07 OF THE SPECIFICATIONS, EXCEPT THE COMPACTION REQUIREMENTS SHALL BE REDUCED TO 90 PERCENT OF MAXIMUM DRY DENSITY OR AS DIRECTED BY THE ENGINEER. PAYMENT FOR ALL OF THE ABOVE WORK SHALL BE MADE AT THE CONTRACT UNIT PRICE PER LINEAR FOOT, AS MEASURED ALONG THE CENTERLINE OF DITCH, OF ITEM 203-DITCH CLEANOUT, WHICH PRICE SHALL INCLUDE ALL EMBANKMENT, EXCAVATION, BORROW, SEEDING AND MULCHING, AND RESTORATION OF DISTURBED AREAS, NECESSARY TO COMPLETE THE WORK. THE FOLLOWING ESTIMATED QUANTITY HAS BEEN INCLUDED IN THE GENERAL SUMMARY FOR USE AS DIRECTED BY THE ENGINEER:

ITEM 203 - DITCH CLEANOUT	200 LIN. FT.

ITEM 601 - PAVED GUTTER, BROKEN IN-PLACE

THIS ITEM SHALL CONSIST OF BREAKING UP SECTIONS OF EXISTING CONCRETE GUTTER WHERE INDICATED IN THE PLANS.

THE GUTTER SHALL BE BROKEN AND LEFT IN PLACE IN A MANNER THAT WILL ASSURE A REASONABLY SMOOTH AND CONTINUOUS SURFACE WITH NO PIECES OF BROKEN CONCRETE BEING LARGER THAN APPROXIMATELY EIGHTEEN (18) INCHES. ALL VOIDS AND UNDERMINED AREAS SHALL BE FILLED WITH ITEM 601, ROCK CHANNEL PROTECTION, TYPE D WITHOUT FILTER.

PAYMENT FOR THE ABOVE DESCRIBED WORK WILL BE MADE AT THE CONTRACT PRICE FOR ITEM 601, LINEAR FEET, PAVED GUTTER, BROKEN IN-PLACE AND SHALL INCLUDE THE COST OF ALL LABOR, MATERIALS AND EQUIPMENT NECESSARY TO COMPLETE THE WORK.

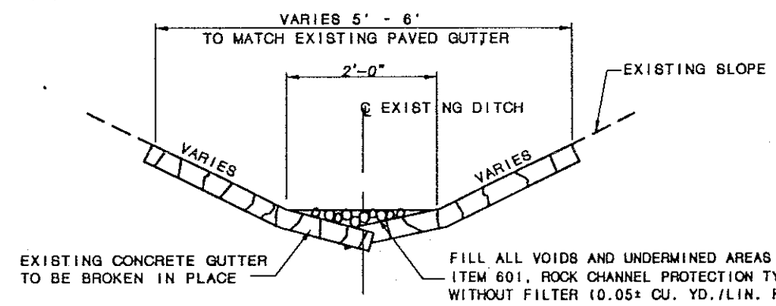

PAVED GUTTER, BROKEN IN-PLACE

NO.	REVISIONS	BY	DATE

OHIO TURNPIKE COMMISSION

GENERAL NOTES
ROADWAY

PLANS PREPARED BY:
BARR ENGINEERING, INC.

DESIGNED: BLG	CHECKED: MJH	DATE: 8/7/97
DRAWN: CLH	IN CHARGE: BLG	SCALE: N.T.S.

CONTRACT 43-97-14 SHEET 7 OF 143

PLOT SCALE = 1:1
PIGS F:\OTC\RGENALL.DWG JULY-08-1997

PLOTTED VIEW = PLAN
XREF(S) = NONE
XREF(P) = NONE

DESIGNED BY: BLG	CHECKED BY: MJH
DATE: 8/7/97	DATE: 8/7/97
DRAWN BY: CLH	REVISED BY:
DATE: 8/7/97	DATE:
REGENALL	

ROADWAY – GENERAL NOTES

EROSION CONTROL

ITEM 659 - SEEDING AND MULCHING

SEEDING AND MULCHING SHALL BE APPLIED TO ALL AREAS OF EXPOSED SOIL BETWEEN THE RIGHT OF WAY LINES AND WITHIN THE CONSTRUCTION LIMITS. THE FOLLOWING ESTIMATED QUANTITY HAS BEEN CARRIED TO THE GENERAL SUMMARY TO SEED AND MULCH DISTURBED AREAS AS DIRECTED BY THE ENGINEER.

ITEM 659 - SEEDING AND MULCHING	2500	SQ. YD.

WATERING SEEDED AREAS

THE FOLLOWING ESTIMATED QUANTITY IS TO BE USED AS DIRECTED BY THE ENGINEER TO PROMOTE GROWTH AND TO CARE FOR PERMANENT SEEDED AREAS PER SECTION 659.09 OF THE SPECIFICATIONS:

ITEM 659 - COMMERCIAL FERTILIZER	0.25	TON
ITEM 659 - WATER	2	M. GAL.

TEMPORARY SOIL EROSION AND SEDIMENT CONTROL

THE FOLLOWING ESTIMATED QUANTITIES ARE TO BE USED AS DIRECTED BY THE ENGINEER FOR TEMPORARY EROSION AND SEDIMENT CONTROL MEASURES:

ITEM 207 - STRAW OR HAY BALES	100 EACH
ITEM 207 - TEMPORARY BENCHES, DAMS AND SEDIMENT BASINS	50 CU. YD.
ITEM 207 - FILTER FABRIC FENCE	100 LIN. FT.
ITEM 601 - ROCK CHANNEL PROTECTION, TYPE C, WITHOUT FILTER	20 CU. YD.
ITEM 659 - REPAIR SEEDING AND MULCHING	1000 SQ. YD.
ITEM 659 - WATER	1 M. GAL.

ITEM 207 - FILTER FABRIC FENCE

FILTER FABRIC SHALL MEET THE REQUIREMENTS OF SECTION 207.02 OF THE SPECIFICATIONS.

THE BOTTOM OF THE FENCE SHALL BE BURIED SIX (6) INCHES BELOW THE GROUND. THE FENCE SHALL BE HIGH ENOUGH TO RETAIN SEDIMENT LADEN WATER AND ADEQUATELY SUPPORTED TO PREVENT COLLAPSE OR BURSTING. THE GROUND ELEVATION OF THE FENCE SHALL BE HELD CONSTANT EXCEPT THAT THE END ELEVATION SHALL BE RAISED TO PREVENT FLOW AROUND THE END OF THE FENCE.

THE FILTER FABRIC SHALL AT THE DIRECTION OF THE ENGINEER BE MAINTAINED TO BE FUNCTIONAL. THIS SHALL INCLUDE REMOVAL OF TRAPPED SEDIMENT AND REQUIRED CLEANING, AND/OR REPLACEMENT OF THE FILTER FABRIC.

THE COST OF ALL MATERIALS, CONSTRUCTION, MAINTENANCE AND REMOVAL SHALL BE INCLUDED IN THE UNIT PRICE BID PER LINEAR FOOT FOR ITEM 207 - FILTER FABRIC FENCE.

EROSION CONTROL

ITEM 601 HAS BEEN PROVIDED IN THE PLANS FOR EROSION CONTROL. ROCK OF A STABLE NATURE SHALL NOT BE REMOVED IN ORDER TO PLACE THIS ITEM. THE ENGINEER SHALL CHECK AND NON-PERFORM QUANTITIES OR ADJUST LOCATIONS AND QUANTITIES OF THIS ITEM WHERE INDICATED BY FIELD CONDITIONS DURING CONSTRUCTION.

DRAINAGE

CROSSINGS AND CONNECTIONS TO EXISTING PIPES AND UTILITIES

WHERE THE PLANS PROVIDE FOR A PROPOSED CONDUIT TO BE CONNECTED TO, OR CROSS OVER OR UNDER AN EXISTING SEWER OR UNDERGROUND UTILITY, THE CONTRACTOR SHALL LOCATE THE EXISTING PIPES OR UTILITIES BOTH AS TO LINE AND GRADE BEFORE STARTING TO LAY THE PROPOSED CONDUIT.

IF IT IS DETERMINED THAT THE ELEVATION OF THE EXISTING CONDUIT, OR EXISTING APPURTENANCE TO BE CONNECTED, DIFFERS FROM THE PLAN ELEVATION OR RESULTS IN A CHANGE IN THE PLAN CONDUIT SLOPE, THE ENGINEER SHALL BE NOTIFIED BEFORE STARTING CONSTRUCTION OF ANY PORTION OF THE PROPOSED CONDUIT WHICH WILL BE AFFECTED BY THE VARIANCE IN THE EXISTING ELEVATIONS.

IF IT IS DETERMINED THAT THE PROPOSED CONDUIT WILL INTERSECT AN EXISTING SEWER OR UNDERGROUND UTILITY IF CONSTRUCTED AS SHOWN ON THE PLAN; THE ENGINEER SHALL BE NOTIFIED BEFORE STARTING CONSTRUCTION OF ANY PORTION OF THE PROPOSED CONDUIT WHICH WOULD BE AFFECTED BY THE INTERFERENCE WITH AN EXISTING FACILITY.

PAYMENT FOR ALL THE OPERATIONS DESCRIBED ABOVE SHALL BE INCLUDED IN THE CONTRACT PRICE FOR THE PERTINENT 603 CONDUIT ITEM.

FARM DRAINS

ALL FARM DRAINS WHICH ARE ENCOUNTERED DURING CONSTRUCTION SHALL BE PROVIDED WITH UNOBSTRUCTED OUTLETS. EXISTING COLLECTORS WHICH ARE LOCATED BELOW THE ROADWAY DITCH ELEVATIONS AND WHICH CROSS THE ROADWAY SHALL BE REPLACED WITHIN THE RIGHT-OF-WAY LIMITS BY ITEM 603 - CONDUIT, TYPE B, ONE COMMERCIAL SIZE LARGER THAN THE EXISTING CONDUIT.

EXISTING COLLECTORS AND ISOLATED FARM DRAINS WHICH ARE ENCOUNTERED ABOVE THE ELEVATION OF ROADWAY DITCHES SHALL BE OUTLETTED INTO THE ROADWAY DITCH BY 603 - CONDUIT, TYPE F. THE OPTIMUM OUTLET ELEVATION SHALL BE ONE FOOT ABOVE THE FLOWLINE ELEVATION OF THE DITCH. LATERAL FIELD TILES WHICH CROSS THE ROADWAY SHALL BE INTERCEPTED BY 603 - CONDUIT, TYPE E, AND CARRIED IN A LONGITUDINAL DIRECTION TO AN ADEQUATE OUTLET OR ROADWAY CROSSING.

THE LOCATION, TYPE, SIZE AND GRADE OR REPLACEMENTS SHALL BE DETERMINED BY THE ENGINEER AND PAYMENT SHALL BE MADE ON FINAL MEASUREMENTS. EROSION CONTROL PADS AND ANIMAL GUARDS SHALL BE PROVIDED AT THE OUTLET END OF ALL FARM DRAINS AS PER ODOT STANDARD CONSTRUCTION DRAWING MC-4, EXCEPT WHEN OUTLETTED INTO A DRAINAGE STRUCTURE. PAYMENT FOR THE EROSION CONTROL PADS AND ANIMAL GUARDS AND ANY NECESSARY BENDS OR BRANCHES SHALL BE INCLUDED FOR PAYMENT IN THE PERTINENT CONDUIT ITEM.

THE FOLLOWING ESTIMATED QUANTITIES HAVE BEEN INCLUDED IN THE GENERAL SUMMARY OF THE WORK NOTED ABOVE:

ITEM 603 - 6" CONDUIT, TYPE B	100 LIN. FT.
ITEM 603 - 6" CONDUIT, TYPE E	100 LIN. FT.
ITEM 603 - 6" CONDUIT, TYPE F, 707.17 NON-PERFORATED ASTM D 3034 (SDR-35), SS961 OR SS944	200 LIN. FT.

EXISTING HEX GRID UNDERDRAINS

WHEN PLACING THE PROPOSED UNDERDRAINS BETWEEN STA. 46+00 AND STA. 56+00, THE CONTRACTOR SHALL ENSURE THAT THE EXISTING HEX GRID UNDERDRAINS PARALLEL TO THE CENTERLINE WITHIN THE AREA OF THE PROPOSED UNDERDRAIN ARE REMOVED. EXISTING DIAGONAL UNDERDRAIN PIPES SHALL BE CONNECTED TO THE PROPOSED UNDERDRAIN USING STANDARD 'Y' CONNECTIONS.

REVIEW OF DRAINAGE FACILITIES

BEFORE ANY WORK IS STARTED ON THE PROJECT, AND AGAIN BEFORE FINAL ACCEPTANCE BY THE OHIO TURNPIKE COMMISSION, REPRESENTATIVES OF THE COMMISSION AND THE CONTRACTOR, ALONG WITH LOCAL REPRESENTATIVES, SHALL MAKE AN INSPECTION OF ALL EXISTING SEWERS WHICH ARE TO REMAIN IN SERVICE AND WHICH MAY BE AFFECTED BY THE WORK. THE CONDITION OF THE EXISTING CONDUITS AND THEIR APPURTENANCES SHALL BE DETERMINED FROM FIELD OBSERVATIONS. RECORDS OF THE INSPECTIONS SHALL BE KEPT IN WRITING BY THE COMMISSION.

THE EXISTING UNDERDRAIN PIPE OUTLETS SHALL ALSO BE LOCATED DURING THIS INSPECTION. ONCE LOCATED, THE EXISTING UNDERDRAIN PIPE OUTLET LOCATIONS SHALL BE MARKED ON THE SHOULDER PAVEMENT WITH PAINT AND RECORDED IN THE INSPECTOR'S REPORTS.

ALL NEW UNDERDRAIN PIPE OUTLETS, CONDUITS, INLETS, CATCH BASINS, AND MANHOLES CONSTRUCTED AS A PART OF THE PROJECT SHALL BE FREE OF ALL FOREIGN MATTER AND IN A CLEAN CONDITION BEFORE THE PROJECT WILL BE ACCEPTED BY THE COMMISSION.

ALL EXISTING UNDERDRAIN PIPE OUTLETS AND SEWERS INSPECTED INITIALLY BY THE ABOVE MENTIONED PARTIES SHALL BE MAINTAINED AND LEFT IN A CONDITION REASONABLY COMPARABLE TO THAT DETERMINED BY THE ORIGINAL INSPECTION. ANY CHANGE IN THE CONDITION RESULTING FROM THE CONTRACTOR'S OPERATIONS SHALL BE CORRECTED BY THE CONTRACTOR TO THE SATISFACTION OF THE ENGINEER.

PAYMENT FOR ALL OPERATIONS DESCRIBED ABOVE SHALL BE INCLUDED IN THE CONTRACT PRICE FOR THE PERTINENT 603 CONDUIT ITEMS.

EXISTING UNDERDRAINS

ALL EXISTING UNDERDRAINS THAT ARE ENCOUNTERED DURING CONSTRUCTION SHALL BE PROVIDED UNOBSTRUCTED OUTLETS AS DIRECTED BY THE ENGINEER.

THE EXISTING UNDERDRAIN OUTLETS LOCATED DURING THE REVIEW OF DRAINAGE FACILITIES SHALL BE PERPETUATED PRIOR TO THE INSTALLATION OF THE PROPOSED PAVEMENT COURSES AS DESCRIBED BELOW.

EXISTING PIPE UNDERDRAINS ENCOUNTERED IN THE MEDIAN SHALL BE CONNECTED TO THE PROPOSED PIPE UNDERDRAIN SYSTEM OR DRAINAGE STRUCTURES USING ITEM 603 -CONDUIT, TYPE B. EXISTING PIPE UNDERDRAINS ENCOUNTERED IN THE OUTSIDE SHOULDER AREA SHALL BE CONNECTED TO THE PROPOSED OUTSIDE SHOULDER UNDERDRAIN SYSTEM OR THE ROADWAY DITCH USING ITEM 603 - CONDUIT, TYPE F. ITEM SPECIAL - PRECAST REINFORCED CONCRETE OUTLETS, SHALL BE PROVIDED AT THE OUTLET END OF ALL NEW PIPE UNDERDRAINS OUTLETTING INTO A ROADWAY DITCH.

NO.	REVISIONS	BY	DATE

OHIO TURNPIKE COMMISSION

GENERAL NOTES
ROADWAY

PLANS PREPARED BY:
BARR ENGINEERING, INC.

DESIGNED: BLG	CHECKED: MJH	DATE: 8/7/97
DRAWN: CLH	IN CHARGE: BLG	SCALE: N.T.S.

CONTRACT 43-97-14 SHEET 8 OF 143

DESIGNED BY: BLG DATE: 8/7/97
DRAWN BY: CLH DATE: 8/7/97
CHECKED BY: MJH DATE: 8/7/97
REVISED BY: DATE:
REGIONAL
PLOTTED VIEW = PLAN
SHEET = NONE
XREF = NONE
PLOT SCALE = 1=1
PMSS C:\DRAWING\TINKOTC\RGENALL.DWG JULY-08-1997

ROADWAY – GENERAL NOTES

EXISTING UNDERDRAINS, CONT'D

THE LOCATION, TYPE, SIZE AND GRADE OF UNDERDRAIN OUTLETS SHALL BE DETERMINED BY THE ENGINEER AND PAYMENT SHALL BE MADE ON FINAL MEASUREMENTS. PAYMENT FOR ANY NECESSARY BENDS OR BRANCHES SHALL BE INCLUDED FOR PAYMENT IN THE PERTINENT CONDUIT ITEM.

THE FOLLOWING ESTIMATED QUANTITIES HAVE BEEN INCLUDED IN THE GENERAL SUMMARY FOR THE WORK NOTED ABOVE:

ITEM 603 - 6" CONDUIT, TYPE B	100	LIN. FT.
ITEM 603 - 6" CONDUIT, TYPE F	100	LIN. FT.
ITEM 603 - 8" CONDUIT, TYPE B	50	LIN. FT.
ITEM 603 - 8" CONDUIT, TYPE F	50	LIN. FT.
ITEM SPECIAL - PRECAST REINFORCED CONCRETE OUTLET	4	EACH
ITEM SP 605 - AGGREGATE DRAIN, TYPE I, WITH FABRIC WRAP	50	LIN. FT.
ITEM SP 605 - AGGREGATE DRAIN, TYPE II, WITH FABRIC WRAP	50	LIN. FT.

ITEM 603 - 30" CONDUIT, TYPE A, VARIOUS, AS PER PLAN

THIS WORK SHALL CONSIST OF CLEANOUT OF THE EXISTING PIPE, FURNISHING AND PLACING THE TYPE OF LINER PIPE SPECIFIED IN THE PLANS AND FILLING THE GAP BETWEEN THE EXISTING PIPE AND THE LINER PIPE WITH GROUT.

THE CLEANOUT OPERATION SHALL NOT BE DESTRUCTIVE TO THE INTEGRITY OF THE EXISTING CULVERT. THE CONTRACTOR SHALL REVIEW HIS CLEANOUT PROCEDURE WITH THE ENGINEER AND OBTAIN THE ENGINEER'S APPROVAL PRIOR TO PERFORMING THE WORK. ALL REMOVAL MATERIALS SHALL BE DISPOSED IN ACCORDANCE WITH SP 108.

GROUT SHALL BE IN ACCORDANCE WITH SP 853A.

THE CONTRACTOR SHALL FIELD VERIFY THAT THE LINER PIPE WILL FIT THROUGHOUT THE LENGTH OF THE EXISTING CULVERT PRIOR TO PURCHASING THE LINER PIPE.

THE CONTRACTOR SHALL SUBMIT HIS LINER INSTALLATION PROCEDURE TO THE ENGINEER AND OBTAIN THE ENGINEERS APPROVAL PRIOR TO PERFORMING THE WORK. THE CONTRACTOR SHALL DEFINE HIS METHOD OF CONSTRUCTION AND PIPE FLOATATION PREVENTION PROCEDURE.

THE FOLLOWING POLYETHYLENE LINER MATERIAL IS ALSO PERMITTED. THE PIPE AND FITTINGS SHALL CONFORM TO ASTM F714 WITH THE FOLLOWING ADDITIONS:

COMPOUND-THE RESIN COMPOUND FOR THE PIPE AND FITTINGS SHALL MEET THE REQUIREMENTS OF ASTM D-1248 FOR TYPE III, CLASS C, CATEGORY 5, GRADE P34 AND SHALL HAVE A PLASTIC PIPE INDUSTRIES RECOMMENDED DESIGNATION OF P 3408.

THE PIPE AND JOINT MANUFACTURERS' CERTIFICATION ENSURING COMPLIANCE WITH THE SPECIFICATIONS SHALL BE FURNISHED.

THE LINER PIPE SHALL HAVE A MAXIMUM STANDARD DIMENSION RATIO (SDR) OF 32.5.

THE JOINT SHALL NOT PROTRUDE ON THE INSIDE OF THE PIPE NOR INCREASE THE OUTSIDE DIAMETER OF THE PIPE. THE JOINT SHALL BE ABLE TO MAINTAIN INTEGRITY DURING INSTALLATION.

THE METHOD OF ATTACHING THE JOINT TO THE POLYETHYLENE LINER PIPE SHALL BE IN ACCORDANCE WITH THE MANUFACTURER'S SPECIFICATIONS.

PAYMENT FOR ALL THE ABOVE SHALL BE INCLUDED IN THE CONTRACT PRICE FOR ITEM 603 - 30" CONDUIT, TYPE A, VARIOUS, AS PER PLAN.

ITEM 603 - CONDUIT BORED AND JACKED

WHERE IT IS SPECIFIED THAT A CONDUIT BE INSTALLED BY THE METHOD OF BORING AND JACKING, NO TRENCH EXCAVATION SHALL BE CLOSER THAN TEN (10) FEET TO THE EDGE OF EXISTING PAVEMENT. TRENCHES SHALL BE ADEQUATELY SUPPORTED AND THE SPECIFICATION REQUIREMENTS FOR CLASS B BEDDING SHALL BE WAIVED. IF A CASING PIPE IS USED IN THE BORING AND JACKING OPERATION, THE VOID BETWEEN IT AND THE INTERIOR CARRIER PIPE SHALL BE COMPLETELY FILLED WITH GROUT OR OTHER MATERIAL APPROVED BY THE ENGINEER AND SHALL BE INCLUDED IN THE UNIT PRICE BID FOR ITEM 603 - CONDUIT BORED OR JACKED BY TYPE AND SIZE.

WHEN ITEM 603 - CONDUIT BORED AND JACKED, (SIZE), TYPE B, 706.02 IS CALLED FOR IN THE PLANS, THE FOLLOWING PIPE MATERIALS MAY BE SUBSTITUTED: 707.13, SS931, SS942, SS946, SS948. PIPES OF DIFFERENT MATERIALS SHALL BE CONNECTED WITH A MASONRY COLLAR AS PER ODOT STANDARD DRAWING MC-4. THE COST OF MASONRY COLLAR SHALL BE INCLUDED IN THE UNIT PRICE BID FOR ITEM 603 - CONDUIT BORED AND JACKED BY TYPE AND SIZE.

ITEM SP 604 - INLET, NO. 3C50 DOUBLE GRATE, AS PER PLAN

WHERE THIS ITEM IS SPECIFIED IN THE PLAN, THIS INLET SHALL BE BUILT ACCORDING TO THE DETAIL SHOWN ON SHEET NO. 49. THE INLET SHALL CONSIST OF A LARGER FRAME TO ACCOMODATE A LARGER PIPE AND TWO GRATES ON EACH SIDE OF THE BARRIER. PAYMENT FOR ALL MATERIALS AND LABOR SHALL BE INCLUDED IN THE UNIT PRICE BID FOR ITEM SP 604 - INLET, NO. 3C50 DOUBLE GRATE, AS PER PLAN.

ITEM SPECIAL - PRECAST FLARED END SECTION

ITEM SPECIAL - PRECAST FLARED END SECTIONS (VARIOUS SIZES) SHALL BE CONSTRUCTED IN ACCORDANCE WITH OTC STANDARD CONSTRUCTION DRAWING DR-1. PAYMENT FOR ALL MATERIALS AND LABOR SHALL BE INCLUDED IN THE UNIT PRICE BID FOR ITEM SPECIAL - PRECAST FLARED END SECTION.

ITEM SPECIAL - PRECAST REINFORCED CONCRETE OUTLET

ITEM SPECIAL - PRECAST REINFORCED CONCRETE OUTLET SHALL BE CONSTRUCTED IN ACCORDANCE WITH OTC STANDARD CONSTRUCTION DRAWING UD-1. PAYMENT FOR ALL MATERIALS AND LABOR SHALL BE INCLUDED IN THE UNIT PRICE BID FOR ITEM SPECIAL - PRECAST REINFORCED CONCRETE OUTLET.

PAVEMENT

JOINT REPAIR

THE FOLLOWING ITEM HAS BEEN PROVIDED FOR THE REPAIR OF UNSOUND PAVEMENT JOINTS IN THE EXISTING CONCRETE PAVEMENT THAT MAY BE ENCOUNTERED AFTER REMOVAL OF THE EXISTING ASPHALT SURFACE COURSE. JOINTS TO BE REPAIRED SHALL BE DETERMINED BY THE ENGINEER. REPAIRS SHALL BE AS PER OTC STANDARD DRAWING CJ-2 SHOWN ON SHEET 142.

THE FOLLOWING CONTINGENCY QUANTITY HAS BEEN CARRIED TO THE GENERAL SUMMARY TO BE USED AS DIRECTED BY THE ENGINEER.

SP 202B - 3 CORNER CRACK REPAIR USING ITEM SP 402 10 CU. YD.

PAVEMENT WIDENING CONSTRUCTION

THE CONTRACTOR SHALL ESTABLISH THE ACTUAL CENTERLINE OF THE TURNPIKE BY MEASUREMENT BETWEEN THE EASTBOUND AND WESTBOUND EDGES OF PAVEMENT. VARIATIONS IN THE ACTUAL WIDTH, AS SHOWN ON THE PLANS, SHALL BE EQUALLY APPLIED TO BOTH PROPOSED SHOULDERS AS DIRECTED BY THE ENGINEER. THE CROSS SLOPE OF THE PROPOSED SHOULDERS MAY VARY FROM THE ACTUAL EDGE OF PAVEMENT TO THE PER PLAN GUTTER LINE ELEVATIONS AS DIRECTED BY THE ENGINEER. POSITIVE DRAINAGE MUST BE MAINTAINED AT ALL TIMES. ALL WORK IS TO BE PERFORMED RELATIVE TO EXISTING FIELD LOCATIONS.

ITEM SPECIAL - ASPHALT PAVEMENT REINFORCEMENT

THIS ITEM SHALL INCLUDE FURNISHING AND PLACING AN ASPHALT PAVEMENT REINFORCEMENT AT THE LOCATIONS AS SHOWN ON THE PLANS. THE ASPHLAT PAVEMENT REINFORCEMENT SHALL BE "GLASSGRID-8502" AS MANUFACTURED BY BAYEX INC., 14770 EAST AVENUE, ALBION N.Y. 14411 (800-263-5715) OR APPROVED EQUAL. THE ASPHALT PAVEMENT REINFORCEMENT SHALL BE INSTALLED AS PER THE RECOMMENDATIONS OF THE MANUFACTURER. THE UNIT PRICE BID PER SQUARE YARD FOR ITEM - SPECIAL ASPHALT PAVEMENT REINFORCEMENT SHALL BE FULL COMPENSATION FOR ALL LABOR, MATERIALS, AND OTHER INCIDENTALS NECESSARY TO COMPLETE THIS ITEM OF WORK.

FULL-DEPTH SHOULDER REPLACEMENT

THE FOLLOWING ESTIMATED QUANTITIES HAVE BEEN INCLUDED IN THE GENERAL SUMMARY FOR FULL-DEPTH SHOULDER REPLACEMENT AS DIRECTED BY THE ENGINEER:

ITEM 203 - SUBGRADE COMPACTION	1100	SQ. YD.
ITEM 203 - EXCAVATION NOT INCLUDING EMBANKMENT CONSTRUCTION	550	CU. YD.
ITEM SP 302 - BITUMINOUS AGGREGATE BASE, PG 64-22	200	CU. YD.
ITEM SP 304 - AGGREGATE BASE	250	CU. YD.
ITEM SP 408 - PRIME COAT	450	GAL.
ITEM SP 609 - ASPHALT CONCRETE CURB, PG 64-22, STANDARD TYPE I	1000	LIN. FT.
ITEM 603 - 6" CONDUIT, TYPE F, 707.17 NON-PERFORATED ASTM 3034 SDR 35 SS931 OR SS944	100	LIN. FT.
ITEM SP 605 - 6" SHALLOW PIPE UNDERDRAIN, 707.15, WITH FABRIC WRAP	1000	LIN. FT.
ITEM SPECIAL - PRECAST REINFORCED CONCRETE OUTLET	5	EACH
ITEM 202 - GUARDRAIL REMOVED FOR REUSE	1000	LIN. FT.
ITEM SP 606 - GUARDRAIL REBUILT, TYPE 5	1000	LIN. FT.

THE FOLLOWING AREAS HAVE BEEN IDENTIFIED AS POSSIBLE AREAS FOR FULL DEPTH SHOULDER REPLACEMENT IN addition TO THOSE ALREADY INDICATED:

STA. 708+00 TO STA. 713+00 E.B. & W.B.
STA. 16+50 TO STA. 18+50 E.B. & W.B.
STA. 28+00 TO STA. 31+00 E.B. & W.B.
STA. 37+25 TO STA. 40+50 E.B. & W.B.

THESE LOCATIONS ARE PROVIDED FOR INFORMATION ONLY. NO FULL DEPTH SHOULDER REPLACEMENT SHALL BE PERFORMED WITHOUT AUTHORIZATION OF THE ENGINEER.

THIS WORK SHALL INCLUDE PLACEMENT OF SHOULDER UNDERDRAINS FOR THE ENTIRE LENGTH AND INSTALLATION OF UNDERDRAIN OUTLETS EVERY 500' ON EACH SIDE OR AS DIRECTED BY THE ENGINEER.

NO.	REVISIONS	BY	DAT

OHIO TURNPIKE COMMISSION

GENERAL NOTES
ROADWAY

PLANS PREPARED BY:
BARR ENGINEERING, INC.

DESIGNED: BLG	CHECKED: MJH	DATE: 8/7/97
DRAWN: BYR	IN CHARGE: BLG	SCALE: N.T.S.

CONTRACT 43-97-14 SHEET 9 OF 14

DESIGNED BY: BL DATE: 8/7/97 CKED BY: MJH DATE: 8/7/97
DRAWN BY: BYR DATE: 8/7/97 REVISED BY: DATE:
REGENALL
PLOTTED VIEW = PLAN XREF(F) = NONE XREF(F) = NONE
PLOT SCALE = 1=1 P166 C:\DRAWING\TINKOTC\RGENALL.DWG JULY-08-1997

MAINTENANCE OF TRAFFIC GENERAL NOTES

1. THE CONTRACTOR'S RESPONSIBILITY TO THE SAFETY OF THE MOTORING PUBLIC WHILE PERFORMING THE REQUIREMENTS OF HIS CONSTRUCTION CONTRACT WITHIN THE PROJECT LIMITS SHALL BE IN ACCORDANCE WITH THESE MAINTENANCE OF TRAFFIC PLANS, SPECIFICATIONS AND SPECIAL PROVISIONS, THE CURRENT EDITION, LATEST REVISION OF THE "OHIO MANUAL OF UNIFORM TRAFFIC CONTROL DEVICES" AND THE APPLICABLE PROVISIONS OF THE "STANDARD PROCEDURE OF MAINTENANCE AND CONTRACTORS OPERATIONS UNDER TRAFFIC ON THE OHIO TURNPIKE", DATED JULY, 1994.

2. ALL MAINTENANCE OF TRAFFIC DEVICES, DRUMS, SIGNS, FLASHING ARROW PANELS, FLAGGERS, ETC. AS SHOWN AND LOCATED ON THE MAINTENANCE OF TRAFFIC DRAWINGS SHALL BE INCORPORATED FOR THE VARIOUS PHASES OF WORK AREAS UNDER NORMAL TRAFFIC CONDITIONS. IF SPECIAL TRAFFIC CONDITIONS EXIST, THESE MAINTENANCE OF TRAFFIC PLANS MAY HAVE TO BE MODIFIED. HOWEVER, NO MODIFICATIONS TO THE LAYOUT OF THE DEVICES SHOWN ON THE MAINTENANCE OF TRAFFIC PLANS IS TO BE MADE UNLESS APPROVED BY THE CHIEF ENGINEER.

3. SINCE FLAGGERS ARE RESPONSIBLE FOR HUMAN SAFETY AND MAKE THE GREATEST NUMBER OF CONTACTS WITH THE TRAVELING PUBLIC OF ALL CONSTRUCTION PERSONNEL, IT IS IMPORTANT THEY ARE, MENTALLY ALERT, COURTEOUS BUT WITH A FIRM MANNER, PROPERLY ATTIRED WITH A NEAT APPEARANCE, AWARE OF THEIR RESPONSIBILITY FOR THE SAFETY OF THE MOTORISTS AND THE CONSTRUCTION PERSONNEL, AND INFORMED OF THE EXACT TRAFFIC MOVEMENTS THAT THEY ARE TO CONTROL. FLAGGERS SHALL WEAR BRIGHT ORANGE VESTS OR JACKETS WHICH ARE TO BE REFLECTORIZED FOR NIGHTTIME OPERATIONS. FLAGGERS ARE TO USE RED FLAGS. (RED FLAGS SHALL BE A MINIMUM OF 18" X 18" IN SIZE.)

   THE USE OF FLAGGERS SHALL BE AS DIRECTED BY THE ENGINEER. HOWEVER, AS A MINIMUM THE CONTRACTOR SHOULD EXPECT TO PROVIDE A FLAGGER AT LOCATIONS WHERE VEHICLES AND/OR EQUIPMENT MERGE INTO AND OUT OF THE TURNPIKE TRAFFIC FLOW PATTERN.

4. LENGTH AND DURATION OF SINGLE LANE CLOSURE AND RESTRICTION SHALL BE AT THE APPROVAL OF THE ENGINEER. IT IS THE INTENT TO MINIMIZE THE IMPACT TO THE TRAVELING PUBLIC. LANE CLOSURES OR RESTRICTIONS OVER SEGMENTS OF THE PROJECT IN WHICH NO WORK IS ANTICIPATED WITHIN A REASONABLE TIME FRAME, AS DETERMINED BY THE ENGINEER, SHALL NOT BE PERMITTED. THE LEVEL OF UTILIZATION OF MAINTENANCE OF TRAFFIC DEVICES SHALL BE COMMENSURATE WITH THE WORK IN PROGRESS.

5. OHIO TURNPIKE MAINTENANCE OF TRAFFIC PHASE DATES, LANE REDUCTION TIME LIMITATIONS, AND LIQUIDATED DAMAGE CLAUSES ARE CONTAINED IN THE FOLLOWING SPECIAL PROVISIONS:
   SP 103 – TIME OF COMPLETION
   SP 104 – ACCESS TO TURNPIKE AND RESTRICTIONS
   SP 111 – TIME OF THE ESSENCE – LIQUIDATED DAMAGES

6. THE CONTRACTOR SHALL PROVIDE A 48 HOUR NOTICE TO THE OHIO TURNPIKE COMMISSION CHIEF ENGINEER PRIOR TO INSTALLING AND CHANGING MAINTENANCE OF TRAFFIC PHASES.

7. TEMPORARY PAVEMENT MARKINGS SHALL BE INSTALLED BY THE CONTRACTOR AS PER SPECIAL PROVISION SP 641. TEMPORARY REMOVAL OF EXISTING PAVEMENT MARKINGS SHALL BE AS PER SPECIAL PROVISION SP 641A.

8. CONSTRUCTION ZONE MARKERS SHALL BE INSTALLED IN ACCORDANCE WITH THE TRAFFIC CONTROL PLANS AND SHALL CONFORM TO ITEM SP 626A – "CONSTRUCTION ZONE MARKERS" OF THE SPECIAL PROVISIONS.

9. ALL TEMPORARY CONCRETE BARRIER SHOWN ON THE PLANS FOR MAINTENANCE OF TRAFFIC WILL BE FURNISHED BY THE CONTRACTOR. THE CONTRACTOR WILL BE PAID FOR INSTALLING,MAINTAINING,STORING, AND SUBSEQUENTLY REMOVING THE BARRIER IN ACCORDANCE WITH THE LUMP SUM BID FOR SPECIAL PROVISION ITEM SP 622 TEMPORARY CONCRETE BARRIER (FURNISHED BY THE CONTRACTOR). THE SAME BARRIER CAN BE USED FOR THE VARIOUS PHASES. THE COST FOR STORING,TRANSPORTATION,INSTALLING,MAINTAINING AND REMOVAL OF THE TEMPORARY CONCRETE BARRIER FOR EACH PHASE SHALL BE INCLUDED IN THE ORIGINAL UNIT COST OF SUPPLYING THE BARRIER FOR ITEM SP 622.

10. ITEM 614 TEMPORARY IMPACT ATTENUATOR, AS PER PLAN

    THIS WORK SHALL CONSIST OF FURNISHING, INSTALLING AND SUBSEQUENTLY REMOVING AND STORING IMPACT ATTENUATORS, AS REQUIRED IN THE PLANS. THIS ITEM SHALL INCLUDE ALL RELATED HARDWARE, NOT SEPARATELY SPECIFIED AS REQUIRED BY THE MANUFACTURER TO CONSTRUCT COMPLETE AND FUNCTIONAL IMPACT ATTENUATOR SYSTEMS.

    THE IMPACT ATTENUATOR SYSTEM CAN BE ANY OF THE FOLLOWING:

    REACT 350, ROADWAY SAFETY SERVICES, INC.
    80 REMINGTON BLVD.
    RONKONKOMA, NY 11779
    (516) 588-6220

    G*R*E*A*T CZ, ENERGY ABSORPTION SYSTEMS, INC.
    ONE EAST WACKER DRIVE
    CHICAGO, IL 60601
    (312) 467-6750

    NOT PERMITTED FOR CONSTRUCTION AFTER 1997

    QUAD GUARD CZ SYSTEM, ENERGY ABSORPTION SYSTEMS, INC.
    ONE EAST WACKER DRIVE
    CHICAGO, IL 60601
    (312) 467-6750

    THE ATTENUATORS SHALL BE PLACED IN ACCORDANCE WITH THE MANUFACTURER'S SPECIFICATIONS AND AT THE LOCATIONS SHOWN ON THE PLANS.

    THE CONTRACTOR SHALL BE RESPONSIBLE FOR INSPECTION, REPAIRING, AND OTHERWISE RESTORING THE IMPACT ATTENUATOR IN ACCORDANCE WITH THE MANUFACTURER'S MAINTENANCE INSTRUCTIONS WHILE IT IS IN USE ON THE PROJECT. SUCH REPAIRS SHALL BE PERFORMED WITHIN TWENTY-FOUR (24) HOURS OF NOTIFICATION OF THE INCIDENT WHICH CAUSED DAMAGE TO THE ATTENUATOR. THE CONTRACTOR SHALL BE RESPONSIBLE FOR SUPPLYING ALL NECESSARY MATERIALS AND EQUIPMENT REQUIRED TO PERFORM THE ABOVE DESCRIBED RESTORATION OF THE ATTENUATOR.

    PAYMENT FOR THE ABOVE WORK SHALL BE MADE AT THE UNIT PRICE BID FOR EACH, ITEM 614 – TEMPORARY IMPACT ATTENUATOR, AS PER PLAN, WHICH PRICE SHALL BE CONSIDERED FULL PAYMENT FOR STORING, FURNISHING, INSTALLING, AND SUBSEQUENTLY REMOVING AT THE SPECIFIED LOCATIONS.

11. ALL TEMPORARY SIGNS SHALL BE FURNISHED AND INSTALLED BY THE OHIO TURNPIKE COMMISSION BUT MAINTAINED BY THE CONTRACTOR.

12. FINAL SIGN AND OTHER MAINTENANCE OF TRAFFIC DEVICE LOCATIONS MAY HAVE TO BE ADJUSTED TO FIT GEOMETRIC ROADWAY CONDITIONS.

13. ALL DRUMS FURNISHED FOR THIS PROJECT SHALL BE THE PLASTIC SAFETY TYPE AS SHOWN ON OHIO TURNPIKE COMMISSION STANDARD DRAWING TCR-2. USED DRUMS ARE NOT PERMITTED. PLASTIC SAFETY DRUMS INCLUDING THE SETTING, MAINTENANCE, REPLACEMENT AND SUBSEQUENTLY REMOVAL SHALL BE INCLUDED IN THE LUMP SUM BID FOR ITEM SP 614 – MAINTAINING TRAFFIC. DURING PHASE 2 CONSTRUCTION THE CONTRACTOR SHALL REOPEN THE ROADWAY TO TWO LANES IN EACH DIRECTION BY 12:00 PM (NOON) FRIDAY. THE TWO LANE DIRECTIONAL ROADWAY MUST REMAIN OPEN UNTIL AT LEAST 10:00 PM FRIDAY. THE STAGING OF THE OUTSIDE SHOULDER CONSTRUCTION SHALL BE SCHEDULED SO THAT NO MORE THEN A 3 INCH DROPOFF EXISTS BY THE FRIDAY 12:00 PM (NOON) PERIOD. THE DRUM LINE SHALL BE BE PLACED IN THE SHOULDER AT THE PAVEMENT EDGE. FOR SATURDAY WORK THE DIRECTIONAL ROADWAYS CAN BE RETURNED TO THE PHASE ONE MAINTENANCE OF TRAFFIC TYPICAL SECTION. THE ROADWAY MUST BE REOPENED TO TWO DIRECTION LANES SUNDAY BY 12:00 (NOON) AND REMAIN OPEN UNTIL AT LEAST 10:00 PM EXCEPTIONS TO THE ABOVE ARE CONTAINED IN SPECIAL PROVISION 104. IN ADDITION TO THE DRUM PLACEMENT REQUIREMENT AS SHOWN ON THE PLANS, THE CONTRACTOR SHALL INSTALL AND MAINTAIN DURING PHASE 2 MAINTENANCE OF TRAFFIC TWO DRUMS IN ADVANCE OF EACH GUARDRAIL TERMINAL ASSEMBLY ET-2000. THE FIRST DRUM SHALL BE PLACED DIRECTLY IN FRONT OF THE ET-2000 FACE AND THE SECOND DRUM SPACED 50 FEET IN ADVANCE OF THE FIRST DRUM.

14. NO WORK SHALL BE DONE AT NIGHT UNLESS BY WRITTEN APPROVAL FROM THE OHIO TURNPIKE CHIEF ENGINEER. THE CONTRACTOR'S REQUEST FOR USE OF A NIGHT WORK ZONE SHALL COMPLY WITH SP 110 AND INCLUDE THE TYPE OF WORK TO BE DONE, THE DURATION OF THE WORK, THE LOCATION OF THE INTENDED WORK, AND THE CONTRACTOR'S PROPOSED LIGHTING PLAN. TEMPORARY LIGHTING OF THE WORK SITE FOR OPERATIONS CONDUCTED DURING NIGHTTIME PERIODS SHALL BE SUCH THAT THE LIGHTS DO NOT CAUSE GLARE TO THE DRIVERS ON THE HIGHWAY. IF GLARE IS DETECTED, THE LIGHT PLACEMENT AND SHIELDING SHALL BE ADJUSTED TO THE SATISFACTION OF THE ENGINEER BEFORE WORK PROCEEDS. ALL TEMPORARY LIGHTING REQUIRED FOR NIGHT WORK SHALL BE AT THE LUMP SUM PRICE BID FOR ITEM SP 614–MAINTAINING TRAFFIC.

15. THE OHIO TURNPIKE COMMISSION HAS ASSIGNED AN OVERALL CONSTRUCTION MANAGEMENT FIRM FOR THIS THIRD LANE WIDENING PROJECT. HOWEVER, EACH CONTRACTOR WHICH HAS WORK LIMITS ADJACENT TO ANOTHER CONTRACTOR WORK LIMITS HAS THE RESPONSIBILITY TO COORDINATE AND MUTUALLY COOPERATE WITH EACH OTHERS WORK ACTIVITIES DURING THE ENTIRE CONSTRUCTION PROCESS, AS PER SP 107.

16. IF THE CONTRACTOR SO ELECTS, HE MAY SUBMIT IN WRITING ALTERNATE METHODS FOR THE MAINTENANCE OF TRAFFIC, PROVIDED THE INTENT OF THE ABOVE PROVISIONS IS FOLLOWED AND NO ADDITIONAL INCONVENIENCE TO THE TRAVELING PUBLIC RESULTS THEREFROM. NO ALTERNATE PLAN SHALL BE PLACED INTO EFFECT UNTIL APPROVAL HAS BEEN GRANTED IN WRITING BY THE CHIEF ENGINEER.

17. AMBER FLASHING LIGHTS SHALL BE USED ON ALL VEHICLES AND/OR EQUIPMENT FOR INGRESS AND EGRESS OF THE WORK ZONE. WHILE IN THE WORK ZONE LIMITS THE FLASHERS ARE TO BE TURNED OFF.

18. IF THE CONTRACTOR FAILS TO COMPLY WITH THE PROVISIONS FOR TRAFFIC CONTROL AS SET FORTH IN THESE PLANS OR WITH PROVISIONS OF THE MANUAL, THE TURNPIKE CHIEF ENGINEER SHALL SUSPEND WORK UNTIL THE CONTRACTOR COMPLIES WITH THE NECESSARY REQUIREMENTS.

19. PAYMENT FOR THE ABOVE, UNLESS SPECIFIED SEPARATELY, SHALL BE AT THE LUMP SUM PRICE BID FOR ITEM SP 614 – MAINTAINING TRAFFIC WHICH SHALL INCLUDE ALL LABOR, EQUIPMENT, MATERIALS, AND INCIDENTALS TO COMPLETE THE ABOVE WORK.

DESIGNED BY: JJS	CHECKED BY: EWK		
DATE: MAY 1997	DATE: MAY 1997		
DRAWN BY: JJS	REVISED BY: AMF		
DATE: MAY 1997	DATE: 8/19/97		
CAD FILE NAME: 7026100/GN9714			

NO.	REVISION	BY	DATE

OHIO TURNPIKE COMMISSION

MAINTENANCE OF TRAFFIC GENERAL NOTES

DATE:	AUG 1997	SCALE:	N.T.S.
CONTRACT 43-97-14		SHEET	10 OF 143

EXISTING FENO MONUMENT SUMMARY

No.	Station	Offset	Northing	Easting	Elevation
16	712+05.80	65.99' RT.	580163.702	2272137.070	1013.203
17	712+93.98	CL	580238.869	2272218.136	1011.199
18	1+33.70	CL	580355.099	2273190.408	1025.510

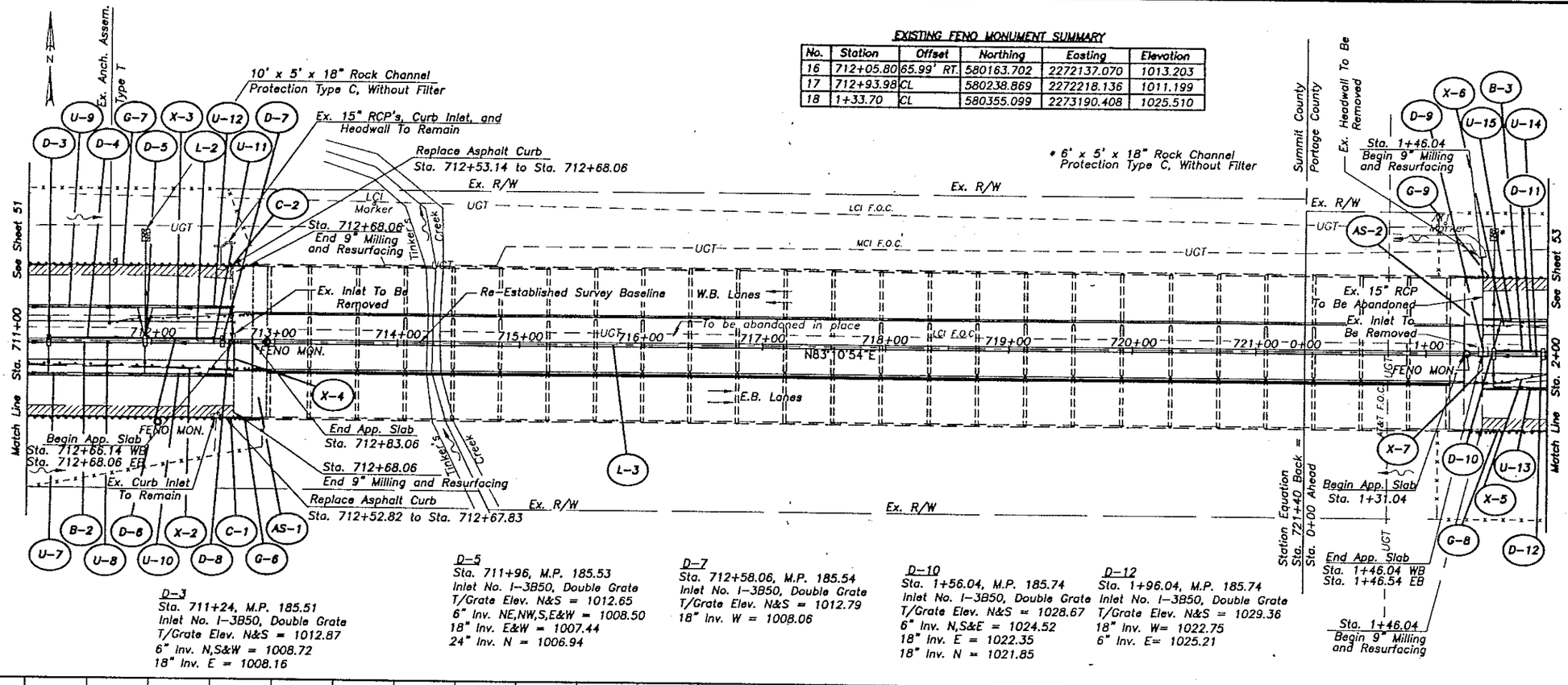

Notes:

1) Work to be performed relative to existing field locations.

2) Profile is from 1953 as-built plans and may not reflect actual conditions.

3) Refer to Survey Control Plan for horizontal control.

0 25 50 100
SCALE IN FEET

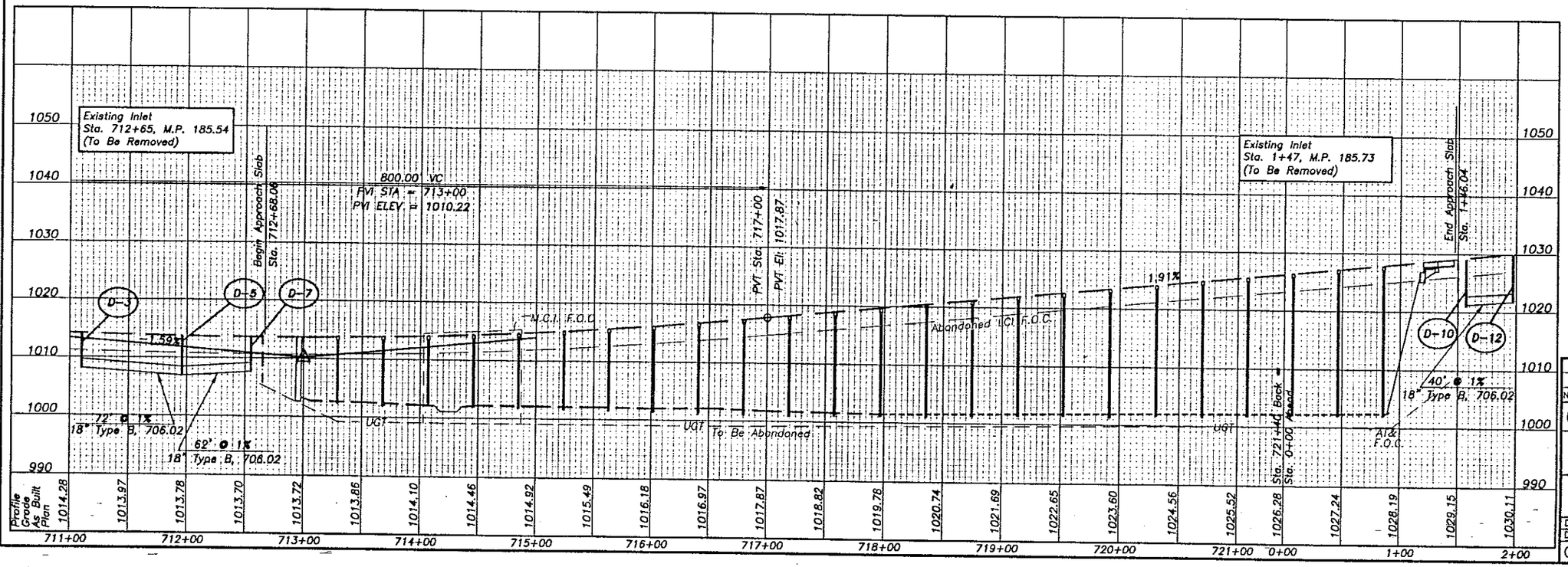

SHEET REFERENCES

Survey Control Plan	2
Typical Sections	4–5
Pavement Calculations	42–43
Roadway Subsummaries	44–46
Drainage Subsummaries	47
Underdrain Subsummary	48
Pavement Elevation Tables	61–65
Cross Sections	69–87
Pipe Profiles	88–93
Underdrain Outlet Details	95

LEGEND

- 9" Milling and Resurfacing
- 3" Milling and Resurfacing
- Full Depth Shoulder Replacement

NO.	REVISIONS	BY	DATE

OHIO TURNPIKE COMMISSION

PLAN & PROFILE
Sta. 711+00 to Sta. 2+00

PLANS PREPARED BY:
BARR ENGINEERING, INC.

DESIGNED: BLG | CHECKED: MJH | DATE: 8/7/97
DRAWN: BYR | IN CHARGE: BLG | SCALE: 1"=50'

CONTRACT 43-97-14 SHEET 52 OF 143

DESIGNED BY: | CHECKED BY: MJH | DATE: 7/22/ | DATE: 8/7/97 | DRAWN BY: b. | REVISED BY: | DATE: 7/23/97 | DATE: | OTDPP2

PLOT SCALE = 1=1
BLC-P186 F:\DTC\ROADWAY\OTDPP2.DWG AUGUST-07-1997

PLOTTED VIEW = PLAN
XREF#1 = NONE
XREF#2 = NONE

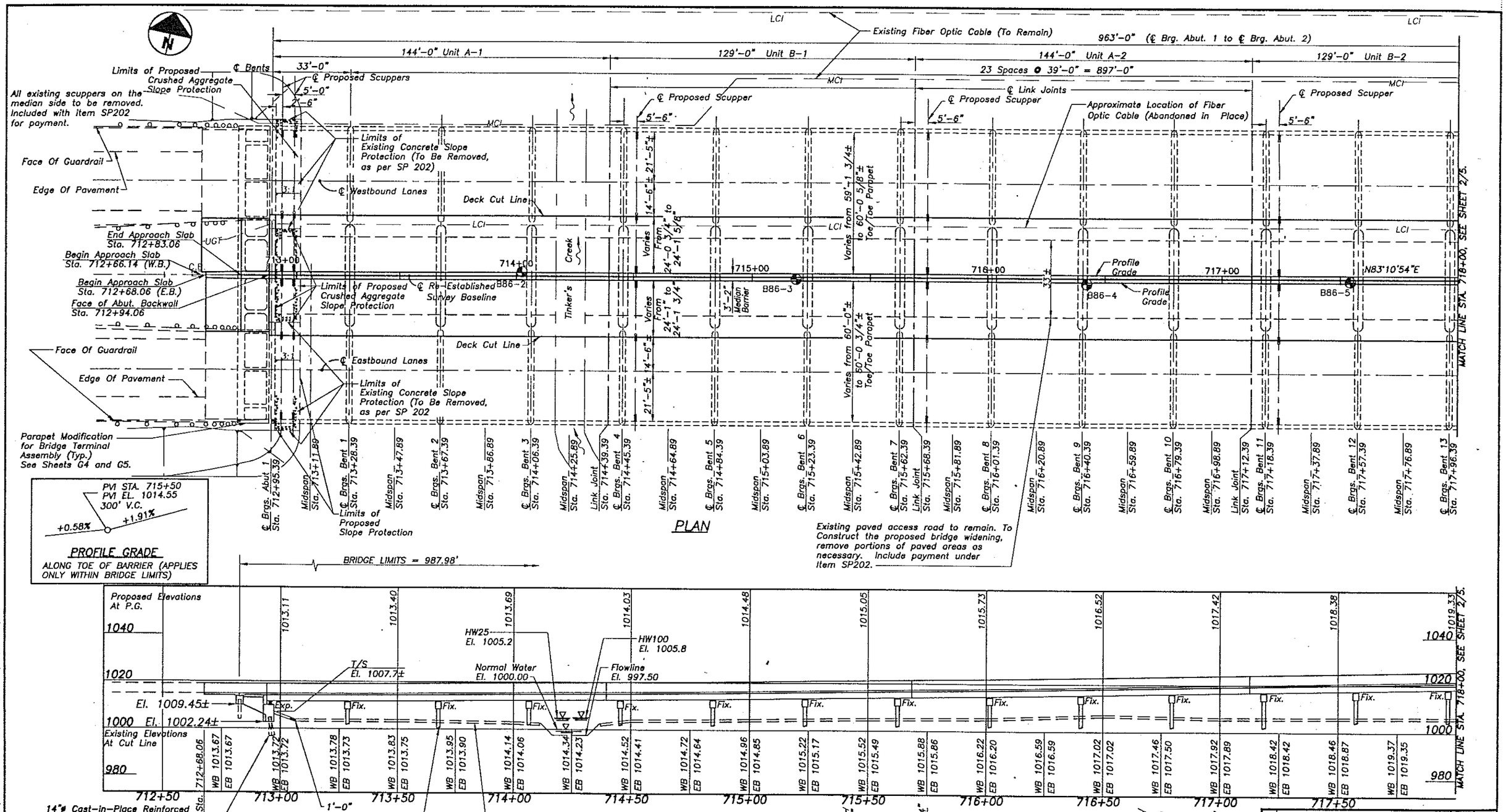

Estimated Pile Lengths

14"ø Cast-in-place Reinforced Concrete Piles

Rear Abutment		
	Front row piles	70 Feet
	Rear row piles	50 Feet
Fwd. Abutment		
	Front row piles	55 Feet
	Rear row piles	45 Feet

For estimated pay lengths of 18"ø cast-in-place reinforced concrete piles see sheet 9/16.

Abbreviations:

T.B.R. – To be Removed

T/S – Top of SLope

HYDRAULIC DATA

Drainage Area = 0.62 Sq. Mi.

Q_{25} = 2892 CFS

Q_{100} = 4107 CFS

Existing and Proposed Structure

HW_{25} = 1005.2 ; V_{25} = 2.5 ft/s

HW_{100} = 1005.8 ; V_{100} = 2.6 ft/s

NO.	REVISIONS	BY	DATE

OHIO TURNPIKE COMMISSION

GENERAL PLAN & ELEVATION

OHIO TURNPIKE OVER TINKER'S CREEK

PLANS PREPARED BY:

BARR ENGINEERING, INC.

DESIGNED: ASB	CHECKED: GEA	DATE: 8-7-97
DRAWN: MBL	IN CHARGE: ASB	SCALE: N.T.S.

M.P. 185.6

1/16

CONTRACT 43-97-14 SHEET 109 OF 143

DESIGNED BY: ASB	CHECKED BY: GEA	
DATE: 5-8-97	DATE: 8-7-97	
DRAWN BY: MBL	REVISED BY:	
DATE: 5-10-97	DATE:	

PLOT SCALE = 1:20
PLOT DATE = MAY-21-1997
GS-200 F:\OTC\BRIDGE\TC\GENPLAN1.DWG

PLOTTED VIEW = PLAN
VIEW = ALL
XREF'S = NONE

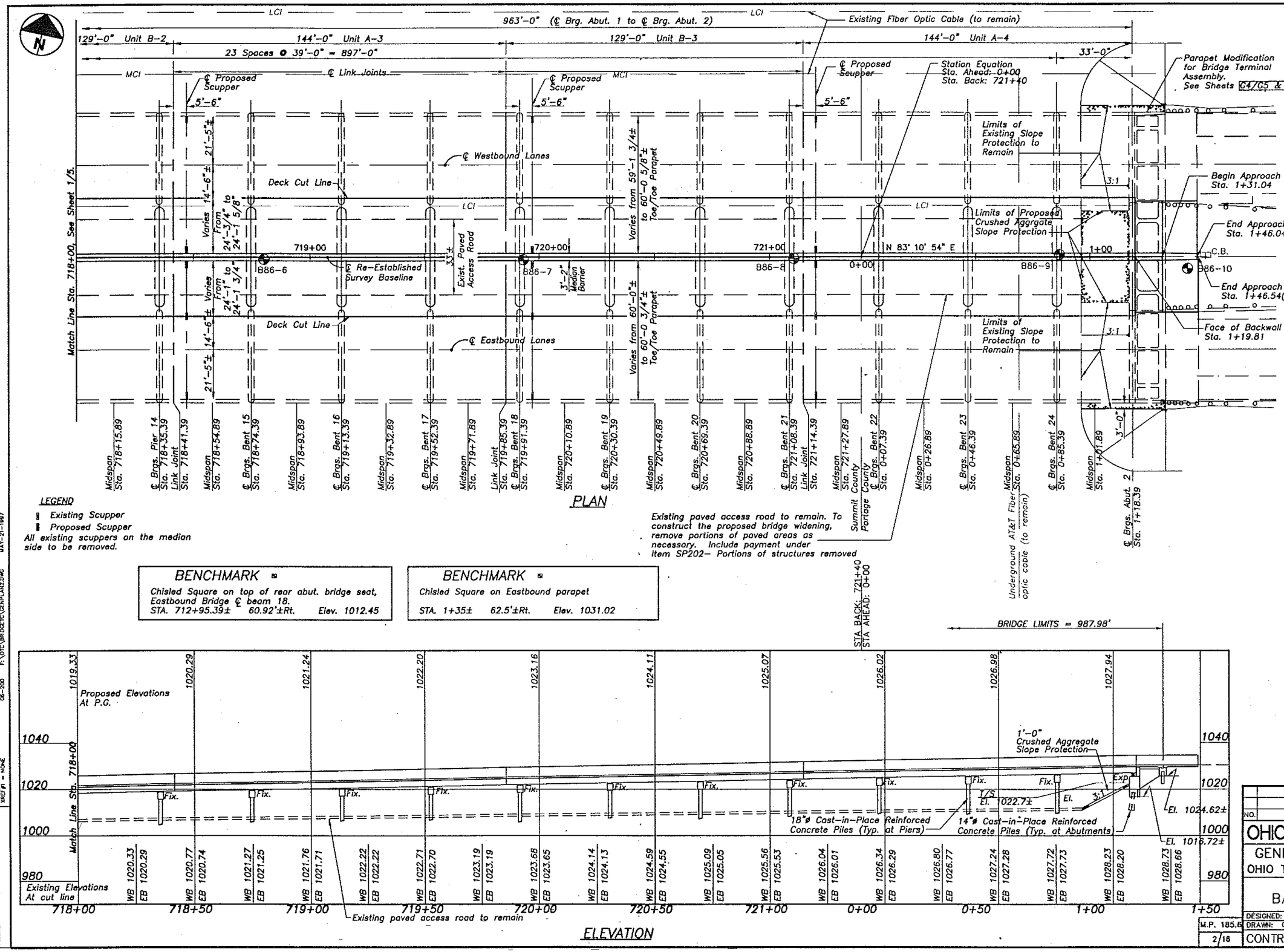

PLAN

ELEVATION

LEGEND

Existing Scupper

Proposed Scupper

All existing scuppers on the median side to be removed.

BENCHMARK

Chisled Square on top of rear abut. bridge seat, Eastbound Bridge ℄ beam 18.
STA. 712+95.39± 60.92'±Rt. Elev. 1012.45

BENCHMARK

Chisled Square on Eastbound parapet
STA. 1+35± 62.5'±Rt. Elev. 1031.02

EXISTING STRUCTURE

TYPE: TWIN STRUCTURES. EACH STRUCTURE HAS CONTINUOUS, NON-COMPOSITE STEEL BEAMS WITH REINFORCED CONCRETE DECK AND SUBSTRUCTURES.

SKEW: 0°-00'-00"

SPAN: 4 "A" UNITS (144'-0" EACH)
3 "B" UNITS (129'-0" EACH)
SEPARATED BY LINK JOINTS AND LOCATED ALTERNATELY-
TOTAL 25 SPANS.
UNIT A: 33'-0", 39'-0", 39'-0", 33'-0" ℄ TO ℄ BRG.
UNIT B: 6'-0", 39'-0", 39'-0", 39'-0", 6'-0" ℄ TO ℄ BRG.

ROADWAY: 38'-6"± F TO F CONC. PARAPETS.

LOADING: HS 20-44(CASE II) AND ALTERNATE MILITARY LOADING

WEARING SURFACE: MONOLITHIC CONCRETE

APPROACH SLABS: 15'-0"(EACH ABUTMENT)

ALIGNMENT: TANGENT

SLOPE PROTECTION: CONCRETE @ ABUT. #1 AND RIP-RAP AT ABUT. #2.

PROPOSED STRUCTURE

TYPE: SAME AS FOR EXISTING STRUCTURE.

SKEW: 0°-00'-00"

SPAN: SAME AS FOR EXISTING STRUCTURE.

ROADWAY: 60'-0"± F TO F CONC. PARAPETS.

LOADING: SAME AS EXISTING STRUCTURE

WEARING SURFACE: MONOLITHIC CONCRETE

APPROACH SLABS: 15'-0" OTC STANDARD DRAWING AS-1 AND AS-2

ALIGNMENT: TANGENT

SLOPE PROTECTION: 1' CRUSHED AGGREGATE SLOPE PROTECTION.

NO.	REVISIONS	BY	DATE

OHIO TURNPIKE COMMISSION

GENERAL PLAN & ELEVATION
OHIO TURNPIKE OVER TINKER'S CREEK

PLANS PREPARED BY:
BARR ENGINEERING, INC.

DESIGNED: ASB	CHECKED: GEA	DATE: 6-7-97
DRAWN: CLH	IN CHARGE: ASB	SCALE: N.T.S.

M.P. 185.6
2/18

CONTRACT 43-97-14 SHEET 110 OF 143

DESIGNED BY: AF CHECKED BY: GEA
DATE: 5-8-97 DATE: 6-7-97
DRAWN BY: CLH REVISED BY:
DATE: 6-15-97 DATE:

PLOT SCALE = 1:30'
GS-200 F:\OTC\BRIDGETC\GENPLAN2.DWG
MAY-21-1997

PLOTTED VIEW = PLAN
XREF = NONE
REF PT = NONE

ESTIMATED QUANTITIES

CALC. BY: GEA DATE: 12/31/96
CHECKED BY: ASB DATE: 1/31/97

ITEM	TOTAL	UNIT	DESCRIPTION	ABUTMENTS	BENTS	SUPER.	GENERAL	AS PER PLAN SHEET NO.
SP202	LUMP		PORTIONS OF STRUCTURES REMOVED				LUMP	
		△						
503	230	CU. YD.	UNCLASSIFIED EXCAVATION	230				
503	53	CU. YD.	ABUTMENT BACKFILL, AS PER 503.10	53 △				
503	LUMP		COFFERDAMS, CRIBS & SHEETING				LUMP	
505	LUMP		PILE DRIVING EQUIPMENT MOBILIZATION				LUMP	
506	LUMP		STATIC LOAD TEST, 18" CIP PILES				LUMP	
506	1	EACH	SUBSEQUENT STATIC LOAD TEST, 18" CIP PILES				1 **	
507	1570	LIN. FT.	14" CAST-IN-PLACE REINFORCED CONCRETE PILES	1570				
507	10170	LIN. FT.	18" CAST-IN-PLACE REINFORCED CONCRETE PILES		10170			
SP509	552,800	POUND	EPOXY COATED REINFORCING STEEL, GRADE 60	23,247	162,577	367,032		
510	76	EACH	DOWEL HOLES, USING SP 853 GROUT ANCHORING	76				
SP511	172	CU. YD.	CLASS C CONCRETE, ABUTMENTS	172				
SP511	430	CU. YD.	CLASS C CONCRETE, PIER CAPS		430			
SP511A	49	CU. YD.	CLASS S CONCRETE, ABUTMENT SLABS AND BARRIERS, USING SHRINKAGE COMPENSATING CEMENT	49				
SP511A	1633	CU. YD.	CLASS S CONCRETE, SUPERSTRUCTURE DECK AND BARRIERS, USING SHRINKAGE COMPENSATING CEMENT			1627	6 *	
SP511A	3	CU. YD.	CLASS S CONCRETE, USING SHRINKAGE COMPENSATING CEMENT FOR PRE-POUR TESTING				3	
SP512	14	SQ. YD.	MEMBRANE WATERPROOFING (SHEET TYPE 2)	14				
513	862,000	POUND	STRUCTURAL STEEL, AISC CATEGORY I, AS PER PLAN			862,000		G3
513	1260	EACH	WELDED STUD SHEAR CONNECTOR			1260		
SP514	LUMP		△			LUMP		
SP514	LUMP		SURFACE PREPARATION OF EXISTING STEEL, SYSTEM UUU			LUMP		
SP514	LUMP		FIELD PAINTING OF EXISTING STEEL, PRIME COAT, SYTEM UUU			LUMP		
SP514	LUMP		FIELD PAINTING OF EXISTING STEEL, INTERMEDIATE COAT, SYTEM UUU			LUMP		
SP514	LUMP		FIELD PAINTING OF EXISTING STEEL, FINISH COAT, SYTEM UUU			LUMP		
516	144	EACH	BEARING DEVICES, FIXED			144		
516	12	EACH	BEARING DEVICES, EXPANSION			12		
SP516B	282	LIN. FT.	SEALING OF CONSTRUCTION JOINTS	282				
518	104	CU. YD.	POROUS BACKFILL WITH FILTER FABRIC	104				
518	180	LIN. FT.	6 INCH PERFORATED CORRUGATED PLASTIC PIPE, AS PER PLAN	180				G2
518	135	LIN. FT.	6 INCH NON-PERFORATED CORRUGATED PLASTIC PIPE, INCLUDING SPECIALS, AS PER PLAN	135				G2
518	16	EACH	SCUPPERS, INCLUDING SUPPORTS			16		
SP519	8	SQ. FT.	PATCHING CONCRETE STRUCTURES	8				
~~SP~~523	9	HOURS	DYNAMIC LOAD TESTS, 18" CIP PILES				9 **	
~~SP~~523	3	HOURS	DYNAMIC LOAD TESTS, 14" CIP PILES				3 **	
SP525A	LUMP		WORKER PROTECTION			LUMP		
SP525A	20	EACH	PROTECTIVE CLOTHING/EQUIPMENT SET			20		
SP525A	LUMP		ESTABLISH REGULATED AREAS			LUMP		
SP525A	LUMP		PAINT WASTE/HAZARDOUS WASTE CLASSIFICATION, HANDLING, AND DISPOSAL			LUMP		
SP525A	LUMP		CONTAINMENT SYSTEM			LUMP		
SP527	LUMP		FALSEWORK, TEMPORARY BRACING AND PROTECTIVE STRUCTURES				LUMP	
SP528	108	EACH	REPLACE EXISTING RIVET WITH NEW HIGH-STRENGTH BOLT			108		
SP533A	394	LIN. FT.	4 1/2" ELASTOMERIC COMPRESSION SEAL IN STRUCTURAL STEEL JOINTS			394		
SP533C	1003	LIN. FT.	REPLACEMENT OF 4 1/2" INCH ELASTOMERIC COMPRESSION SEAL IN STRUCTURAL STEEL JOINT			1003		
SP536	6535	SQ. YD.	CONCRETE WEATHERPROOFING, DECK AND APPROACH SLABS			6535		
SP536	1710	SQ. YD.	CONCRETE WEATHERPROOFING, PARAPETS			1710		
SP536	1546	SQ. YD.	CONCRETE WEATHERPROOFING, SUBSTRUCTURE	93	1453			
601	310	SQ. YD.	CRUSHED AGGREGATE SLOPE PROTECTION				310	

NOTES:

ITEM SP202
PORTIONS OF STRUCTURE REMOVED SHALL INCLUDE APPROXIMATELY 393 C.Y. OF SUPERSTRUCTURE CONCRETE, 8 C.Y. OF ABUTMENT SLAB CONCRETE, 24 LIN. FT. OF EXPANSION JOINT, 19 C.Y. OF EXISTING SLOPE PROTECTION REMOVAL, PORTIONS OF EXISTING PAVED ACCESS ROADS AS NECESSARY, 16 SCUPPERS, AND 4 C.Y. OF CONCRETE PARAPET REMOVAL.

* AS A CONTINGENCY, 6 C.Y. OF CLASS S CONCRETE HAS BEEN INCLUDED IN THE ESTIMATED QUANTITIES TO BE USED AS DIRECTED BY THE ENGINEER FOR ADDITIONAL CONCRETE REQUIRED IN THE HAUNCHES DUE TO PROFILE ADJUSTMENT.

△ FIELD CLEANING AND TOUCH-UP OF SHOP PRIMER AND CONNECTIONS, SYSTEM OZEU (APPLICATION OF SHOP PRIMER FOR SYSTEM OZEU IS INCLUDED IN THE COST OF STEEL) AND FIELD CLEANING AND PAINTING OF FAYING SURFACES WITH INORGANIC ZINC.

** AS A CONTINGENCY ITEM 506-SUBSEQUENT STATIC LOAD TEST, 18" CIP PILES, ITEM ~~SP~~523-DYNAMIC LOAD TESTS, 18" CIP PILES, AND ITEM ~~SP~~523-DYNAMIC LOAD TESTS, 14" CIP PILES ARE TO BE USED AS DIRECTED BY THE ENGINEER.

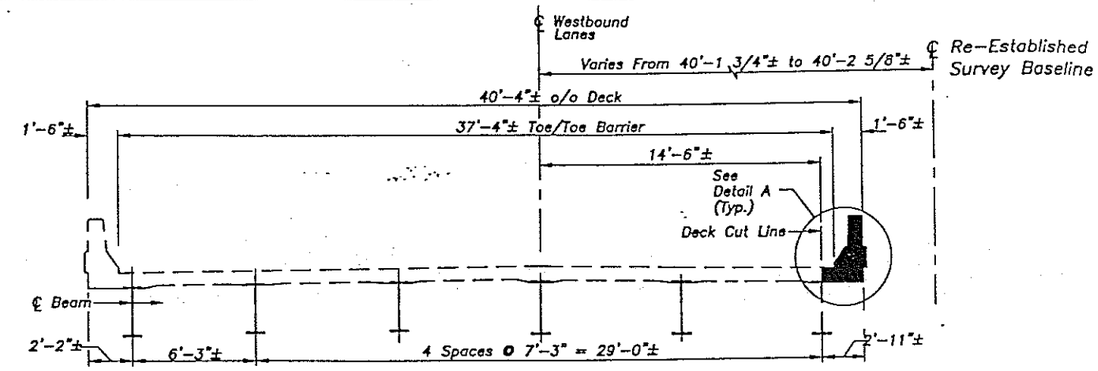

TYPICAL SECTION EXISTING WESTBOUND STRUCTURE

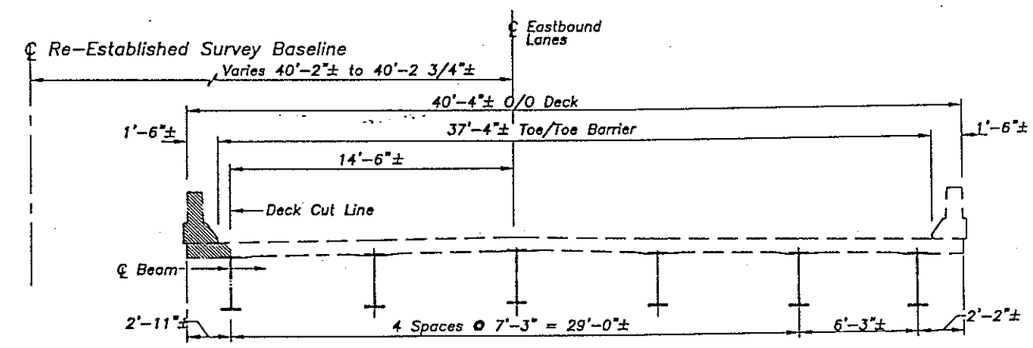

TYPICAL SECTION EXISTING EASTBOUND STRUCTURE

LEGEND:

REMOVAL LIMITS

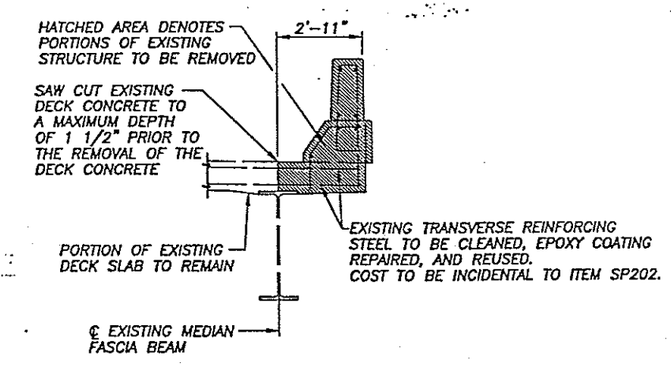

DETAIL A
SECTION SHOWING REMOVAL LIMITS

NO.	REVISIONS	BY	DATE
△	QUANTITY REVISION	PSB	9/97

OHIO TURNPIKE COMMISSION
ESTIMATED QUANTITIES
OHIO TURNPIKE OVER TINKER'S CREEK

PLANS PREPARED BY:
BARR ENGINEERING, INC.

DESIGNED: ASB CHECKED: GEA DATE: 8-7-97
DRAWN: CJH IN CHARGE: ASB SCALE: N.T.S.

M.P. 185.6
3/16

CONTRACT 43-97-14 SHEET 111 OF 143

PLOT SCALE = 1=40
P-188 F:\DYC\BRIDGE1C\TINK505.DWG MAY-19-1997

PLOTTED VIEW = PLAN
XREF\1 = NONE
XREF\1 = NONE

DATE: 5-21-97 DATE: 8-7-97
DRAWN BY: CJH REVISED BY:
DATE: 8-21-97 DAT

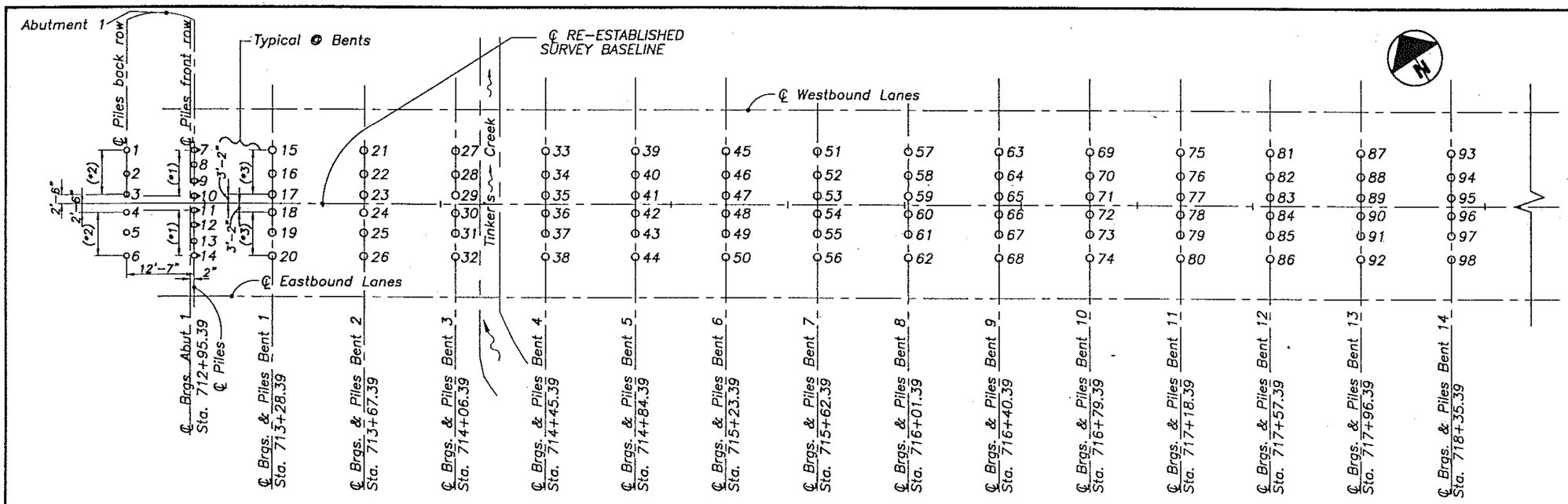

(*1) 3 spa. @ 6'-2"
(*2) 2 spa. @ 9'-3"
(*3) 2 spa. @ 7'-6"

Notes:

- All dimensions are either parallel to ℄ Re-established survey baseline or perpendicular to ℄ Re-established survey baseline.
- Piles 1 through 14 in Abutment 1 & Piles 159 through 172 in Abutment are of 14"ø reinforced concrete.
- Piles 15 through 158 at bents are of 18"ø reinforced concrete.
- For pile lengths at abutments, see sheet 1/16 .
- For pile lengths and spacings at Bents, see sheet 9/16 .
- Refer to sheets 6/16 thru 8/16 for Abutment Details and sheet 9/16 for Bent Details.

◐ – Battered Pile @ 4:1

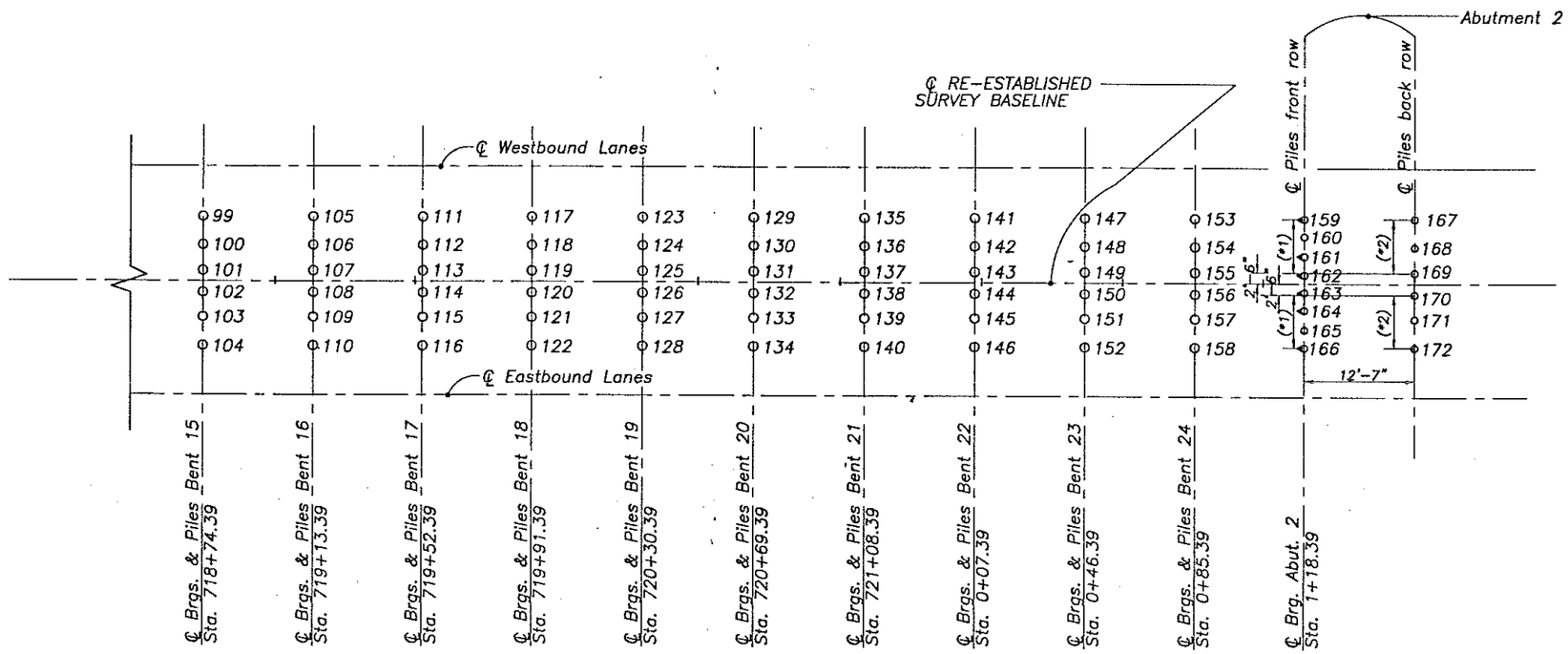

Note:
Station Equation
Sta. 721+40 Back =
Sta. 0+00 Ahead

PILING PLAN

NO.	REVISIONS	BY	DATE

OHIO TURNPIKE COMMISSION

PILING PLAN
OHIO TURNPIKE OVER TINKER'S CREEK

PLANS PREPARED BY:
BARR ENGINEERING, INC.

DESIGNED: ASB	CHECKED: GEA	DATE: 8-7-97
DRAWN: CLH	IN CHARGE: ASB	SCALE: N.T.S.

M.P. 185.6
4/16

CONTRACT 43-97-14 SHEET 112 OF 143

DESIGNED BY: ASB	CHKED BY: GEA	
DATE: 4-25-97	8-7-97	
DRAWN BY: CLH	REVISED BY:	
DATE: 5-13-97	DATE:	

PLOTTED VIEW = PLAN
XREF1 = NONE
XREF2 = NONE
PLOT SCALE = 1=32
P-1SM F:\OTC\BRIDGETC\THMS05.DWG MAY-19-1997

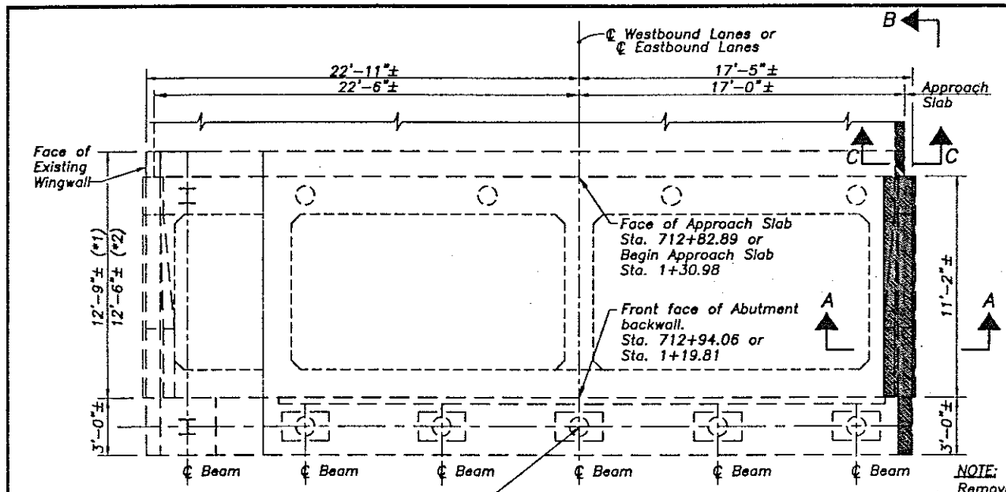

PLAN

Abutment 1, Eastbound Structure
Abutment 2, Westbound Structure

NOTE:
Remove curtainwall to top of breastwall. Clean and finish exposed area to match adjacent breastwall top. Include with Item SP202 for payment.

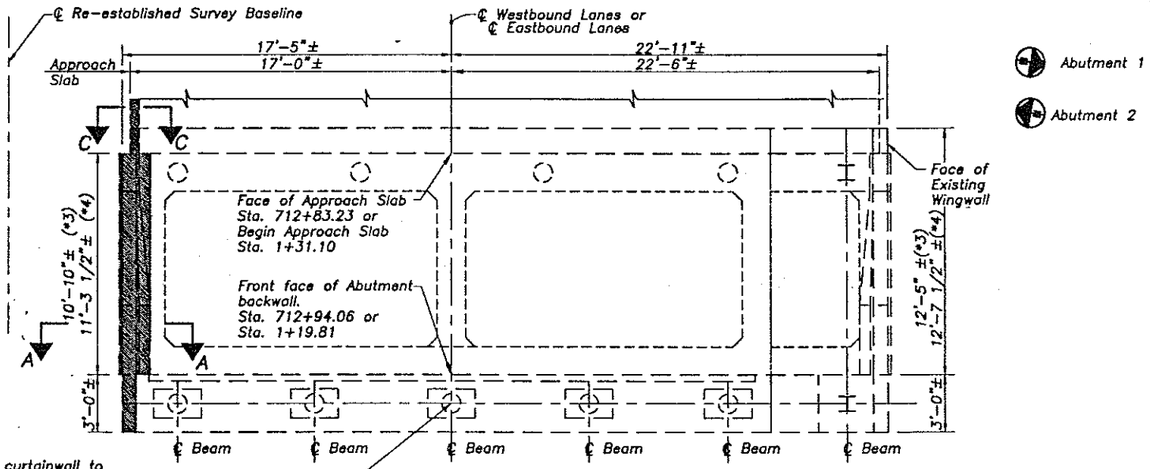

PLAN

Abutment 1, Westbound Structure
Abutment 2, Eastbound Structure

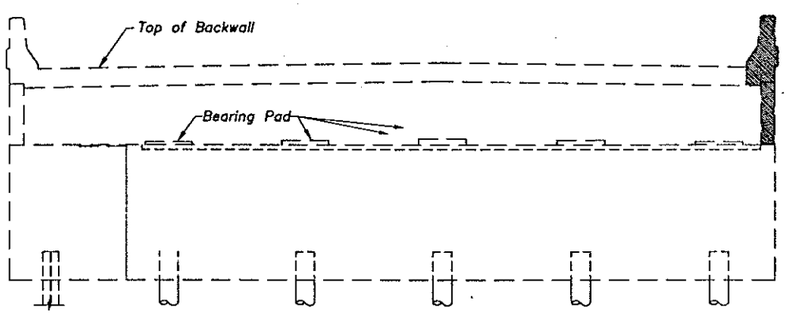

ELEVATION

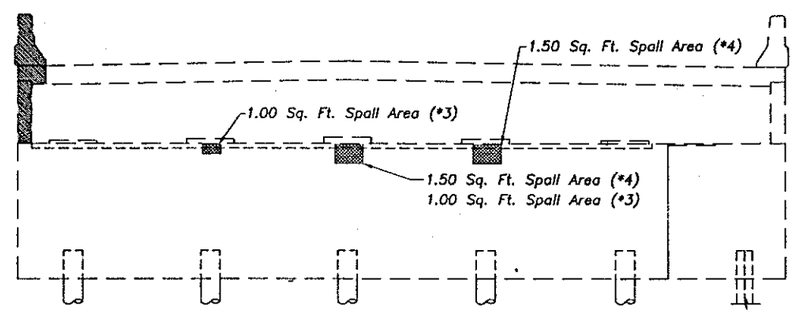

ELEVATION

NOTES:

(*1) Abutment 1 Eastbound Structure

(*2) Abutment 2 Westbound Structure

(*3) Abutment 1 Westbound Structure

(*4) Abutment 2 Eastbound Structure

LEGEND

Denotes portions of existing structure to be removed as per Item SP-202

Denotes areas to be patched as per Item SP-519

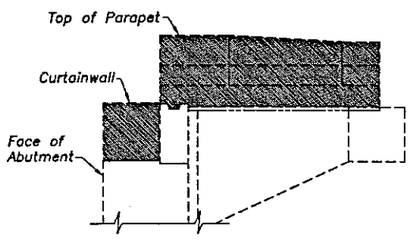

VIEW B-B

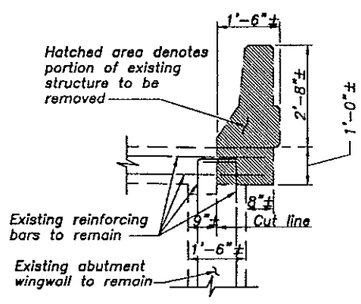

SECTION A-A

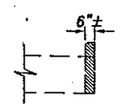

SECTION C-C

CONCRETE PATCHING QUANTITIES	
Abutment 1, Westbound Structure	2.0 SQ. FT.
Abutment 2, Eastbound Structure	3.0 SQ. FT.
Allowance to account for additional deterioration	3.0 SQ. FT.
TOTAL	8.0 SQ. FT.

ITEM SP 519 - PATCHING CONCRETE STUCTURES: PHYSICAL INVENTORY OF MEASURED QUANTITIES OF DETERIORATION WAS PERFORMED IN FEBRUARY, 1997.

ESTIMATED QUANTITIES HAVE BEEN INCREASED BY 50% OVER MEASURED QUANTITIES TO ALLOW FOR ADDITIONAL DETERIORATION.

EXACT DIMENSIONS AND LOCATIONS OF PATCHES SHALL BE DETERMINED BY THE ENGINEER IN-THE FIELD FOR FINAL PAY QUANTITY.

NO.	REVISIONS	BY	DATE

OHIO TURNPIKE COMMISSION

EXISTING ABUTMENT DEMOLITION/ REPAIR DETAILS
OHIO TURNPIKE OVER TINKER'S CREEK

PLANS PREPARED BY:
BARR ENGINEERING, INC.

M.P. 185.6	DESIGNED: ASB	CHECKED: GEA	DATE: 8-7-97
	DRAWN: CLH	IN CHARGE: ASB	SCALE: N.T.S.
5/16	CONTRACT 43-97-14 SHEET 113 OF 143		

DESIGNED BY: AS DATE: 5-19-97
DRAWN BY: CLH DATE: 6-12-97
CKED BY: GEA E. 8-7-97
REVISED BY: DATE:
PLOTTED VIEW = PLAN
XREF's = NONE
XREF's = NONE
PLOT SCALE = 1=48
P-185 F:\OTC\BRIDGETC\TINK303.DWG MAY-19-1997

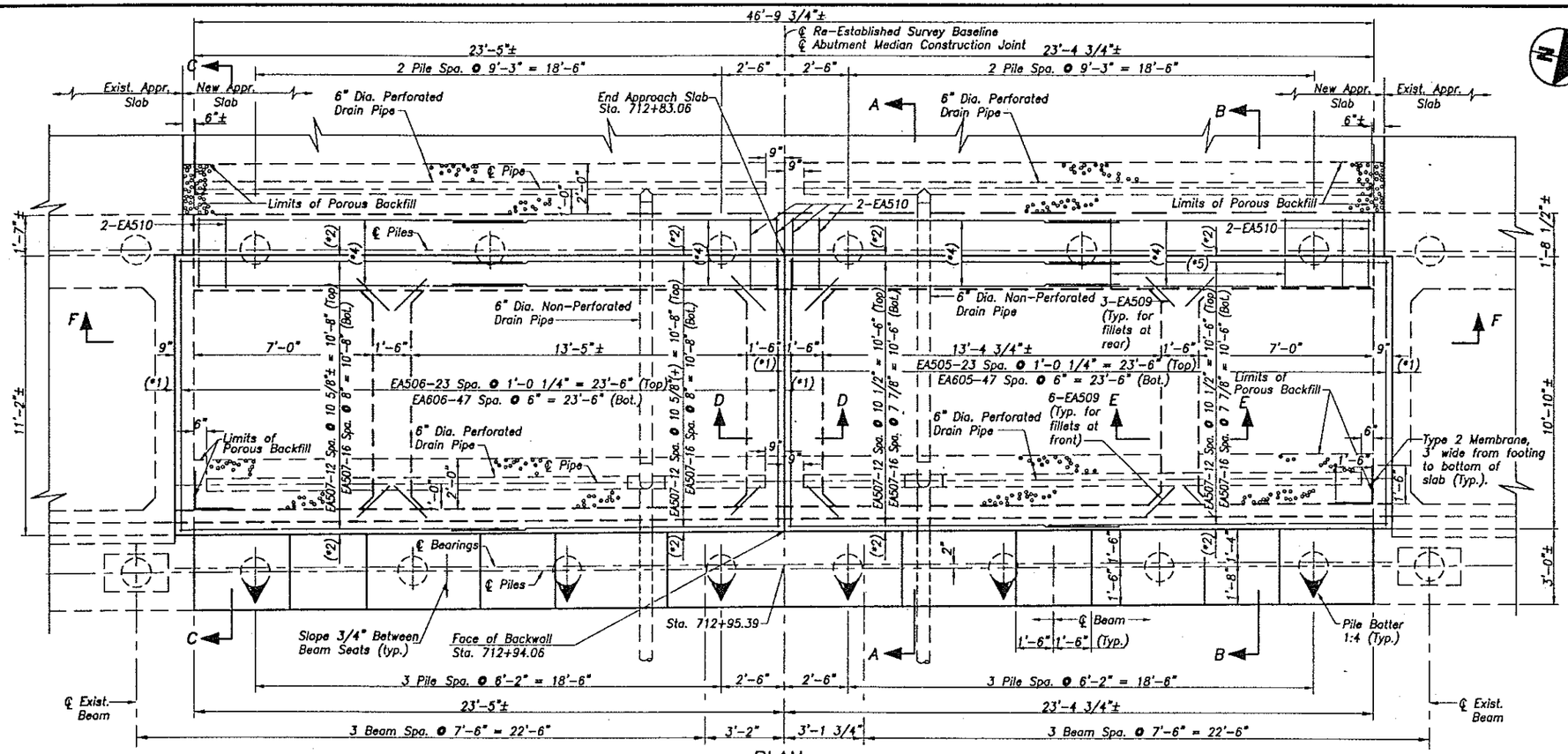

PLAN
(MEDIAN NOT SHOWN)

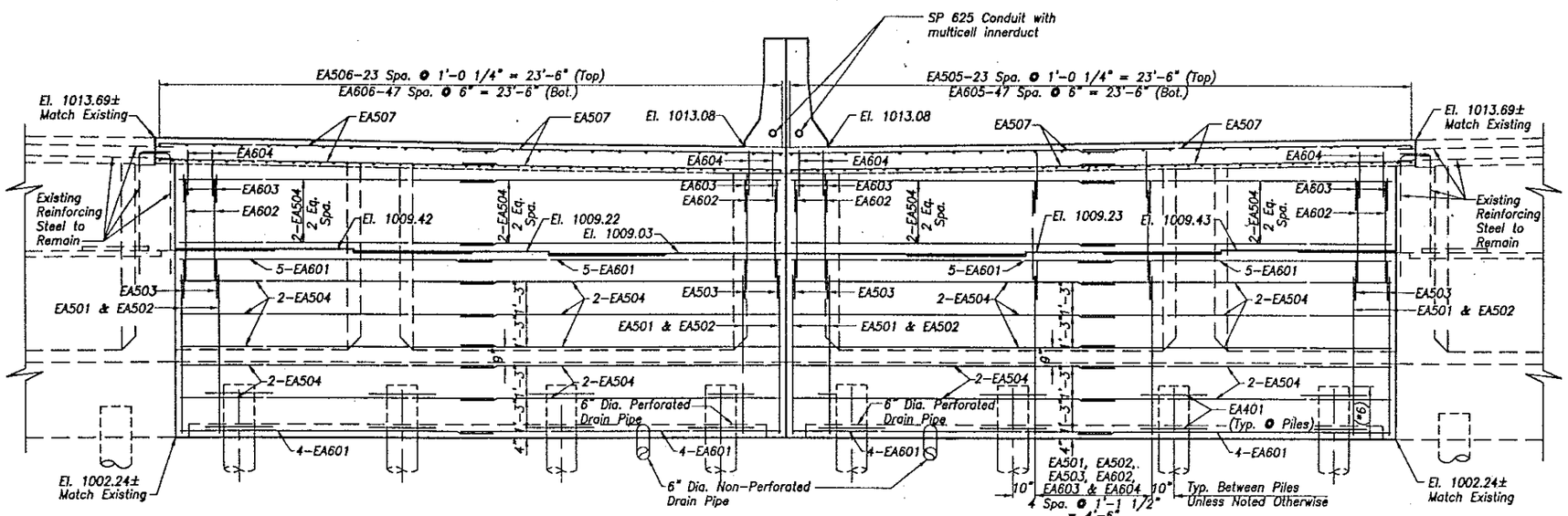

ELEVATION

NOTES:

(*1) 4"±

(*2) 2 1/2" ± 1/2"

(*4) 4-EA601 & 4-EA504 in rear footing

(*5) 2-EA510, 5 Eq. spa. between piles, (typ.) unless shown otherwise, in rear footing.

(*6) 2'-0" (Typ. front row)
1'-9" (Typ. back row)

Abutment elevation shows reinforcing bars in breastwall, backwall and abutment slab only. For additional slab bars EA508 at diaphragms, see Section B-B, sheet 8/16 .

Abutment plan shows reinforcing bars in abutment slab, rear footing and fillets only.

For sections A-A, B-B, C-C, and F-F see sheet 8/16 .

For section D-D see sheet 7/16 .

Special care shall be taken to finish the concrete under the bearings to a flat, level surface. The concrete surface shall be steel trowel finished without brushing and the flatness of the finished surface shall not vary from a straight edge laid on the surface in any direction within the limits of the bearing footprint by more than 1/16 inch. Surfaces which fail to conform to the required flatness shall be ground until acceptable.

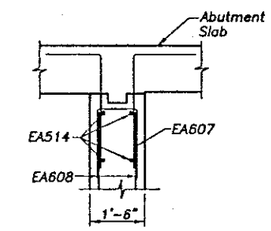

SECTION E-E

NO.	REVISIONS	BY	DATE

OHIO TURNPIKE COMMISSION

ABUTMENT 1 DETAILS
OHIO TURNPIKE OVER TINKER'S CREEK

PLANS PREPARED BY:
BARR ENGINEERING, INC.

M.P. 185.6	DESIGNED: ASB	CHECKED: GEA	DATE: 8-7-97
	DRAWN: CLH	IN CHARGE: ASB	SCALE: N.T.S.
6/16	CONTRACT 43-97-14 SHEET 114 OF 143		

DESIGNED BY: ASB DATE: 2-18-97
CHECKED BY: GEA DATE: 8-7-97
DRAWN BY: CLH DATE: 3-12-97
REVISED BY: DATE:

PLOT SCALE = 1:32
05-200 F:\OTC\BRIDGETC\ABUTPLAN.DWG MAY-21-1997
PLOTTED VIEW = PLAN
XREF(S) = NONE
XREF(S) = NONE

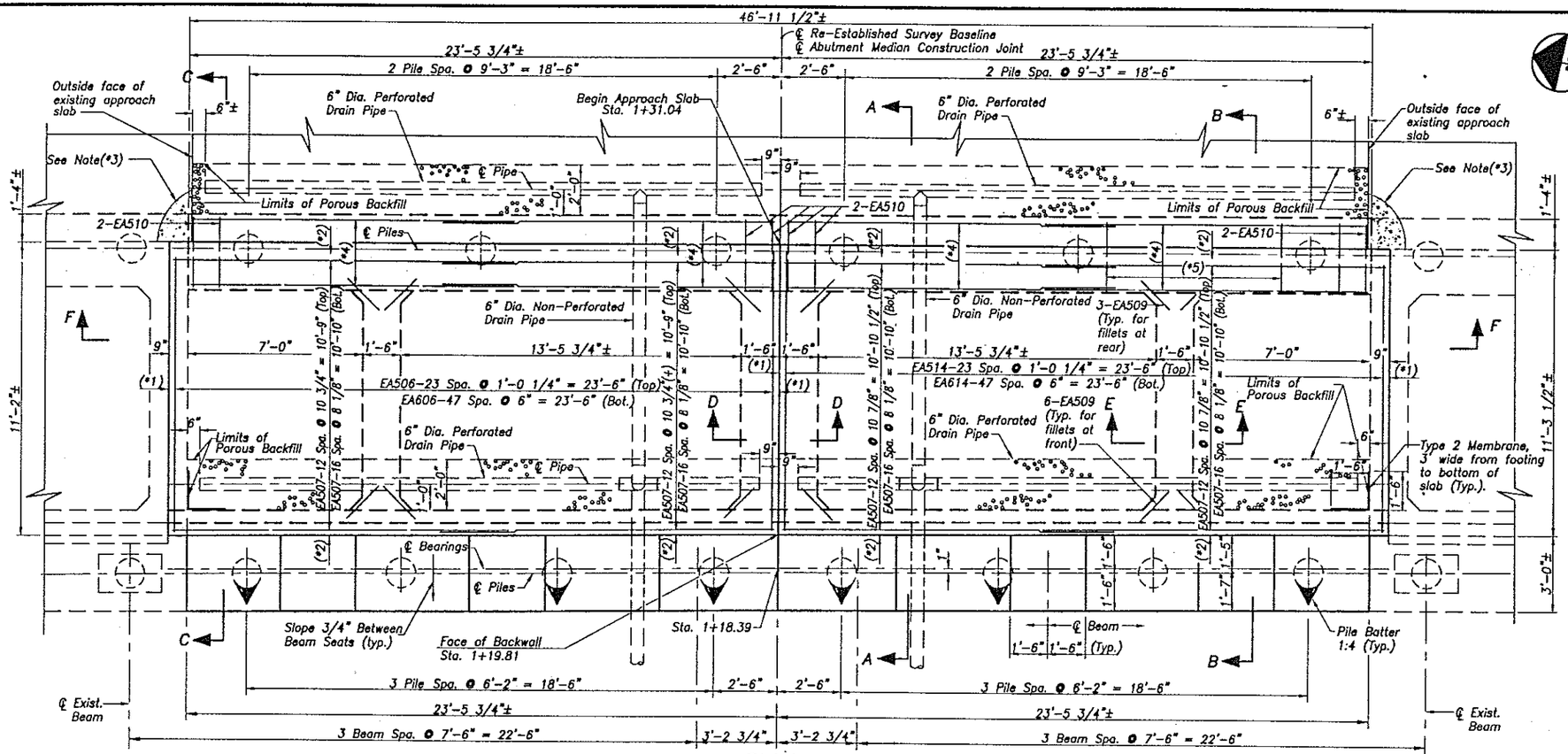

PLAN
(MEDIAN NOT SHOWN)

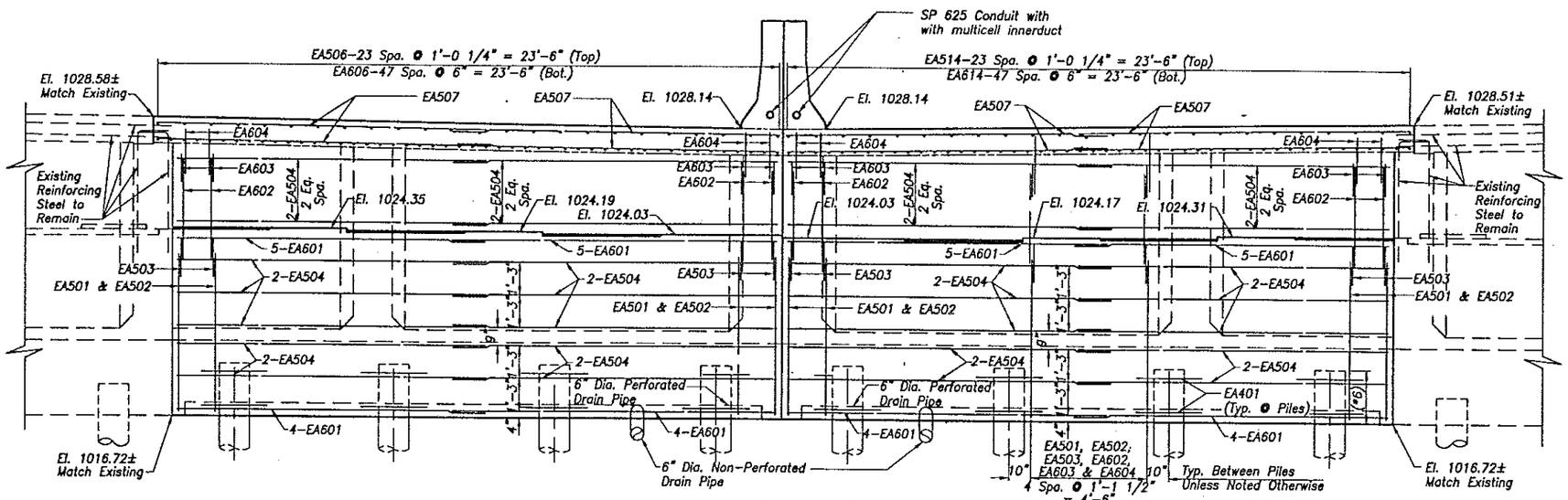

ELEVATION

NOTES:

(*1) 4 1/4"±

(*2) 2 1/2" ± 1/2"

(*3) Remove exist. approach slab (leaving reinforcing steel in place) concrete if necessary to construct rear abutment footing. On completing rear footing construction, replace the removed approach slab concrete. Include with Item SP611 for payment.

(*4) 4-EA601 & 4-EA504 in rear footing

(*5) 2-EA510, 5 Eq. spa. between piles, (typ. unless shown otherwise), in rear footing.

(*6) 2'-0" (Typ. front row)
1'-9" (Typ. back row)

Abutment elevation shows reinforcing bars in breastwall, backwall and abutment slab only. For additional slab bars EA508 at diaphragms, see Section B-B, sheet 8/16.

Abutment plan shows reinforcing bars in abutment slab, rear footing and fillets only.
For sections A-A, B-B, C-C, and F-F see sheet 8/16.
For section E-E see sheet 6/16.

Special care shall be taken to finish the concrete under the bearings to a flat, level surface. The concrete surface shall be steel trowel finished without brushing and the flatness of the finished surface shall not vary from a straight edge laid on the surface in any direction within the limits of the bearing footprint by more than 1/16 inch. Surfaces which fail to conform to the required flatness shall be ground until acceptable.

GROOVE AND SEAL WITH 705.04 AS SHOWN ON ODOT STANDARD DRAWING BP-2.1 AT THE TOP OF THE BARRIER. COST TO BE INCLUDED W/SP511A ABUTMENT SLAB CONCRETE.

ALL LONGITUDINAL PARAPET REINFORCING BARS ARE EA506

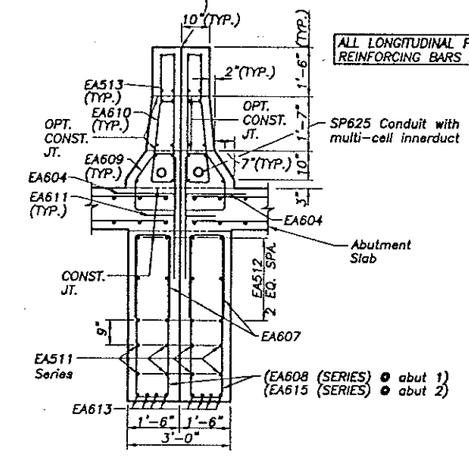

SECTION D-D

NO.	REVISIONS	BY	DATE

OHIO TURNPIKE COMMISSION

ABUTMENT 2 DETAILS
OHIO TURNPIKE OVER TINKER'S CREEK

PLANS PREPARED BY:
BARR ENGINEERING, INC.

DESIGNED: ASB	CHECKED: GEA	DATE: 8-7-97
DRAWN: CLH	IN CHARGE: ASB	SCALE: N.T.S.

M.P. 185.6

7/16

CONTRACT 43-97-14 SHEET 115 OF 143

DESIGNED BY: ASB	CHECKED BY: GEA
DATE: 3-4-97	DATE: 8-7-97
DRAWN BY: CLH	REVISED BY:
DATE: 4-16-97	DATE:

PLOTTED VIEW = PLAN
SCALE = NONE
XREF = NONE

PLOT SCALE = 1:32
P-185 F:\OTC\BRIDGETC\ABUTPL N2.DWG MAY-20-1997

NOTE:
For Sections D–D & E–E, see sheet 7/16 .

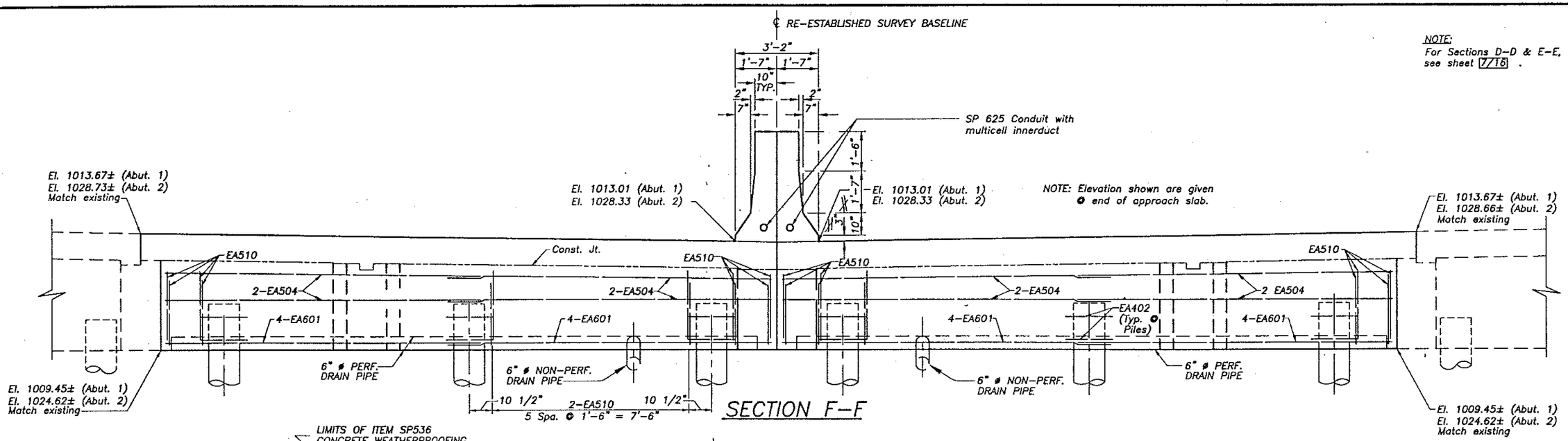

SECTION F–F

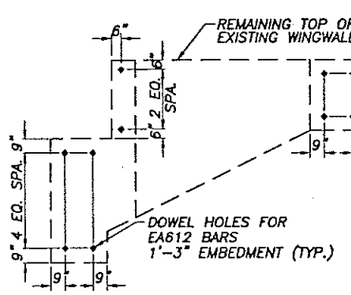

VIEW C–C

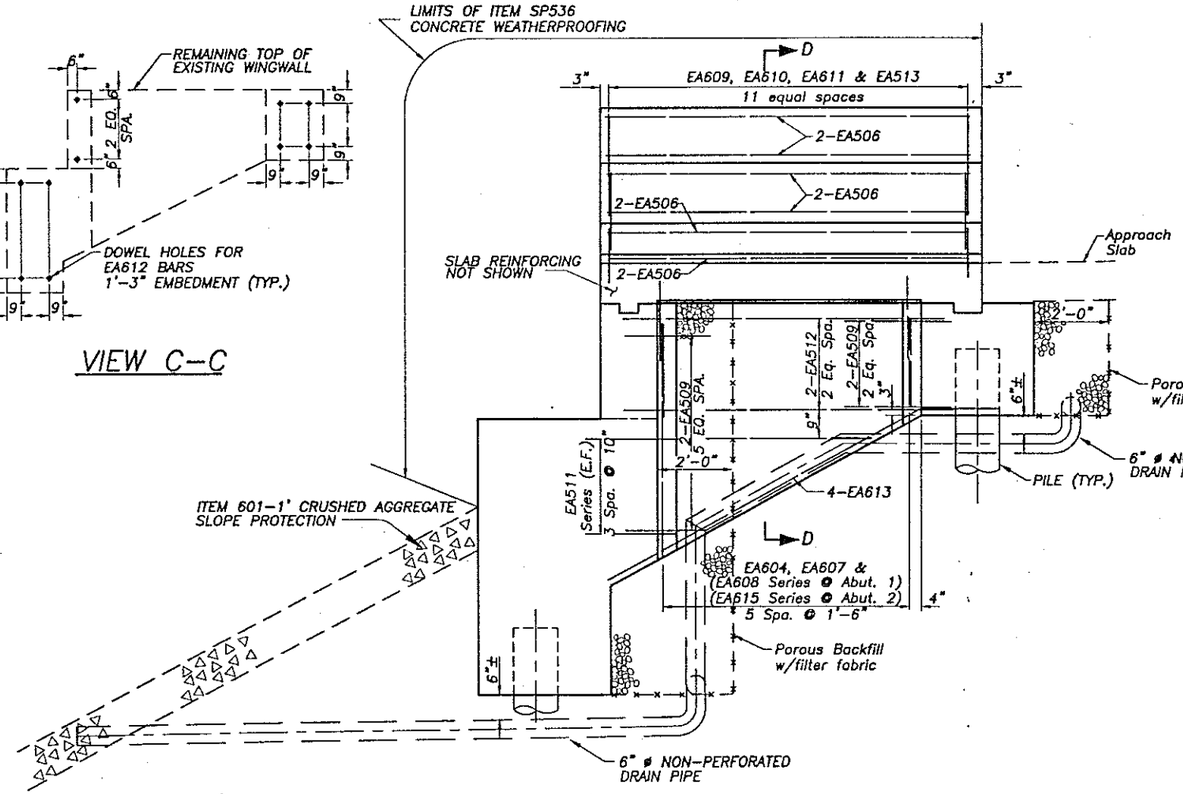

SECTION A–A
(Reinforcing bars in diaphragm for right half shown. Other half similar.)

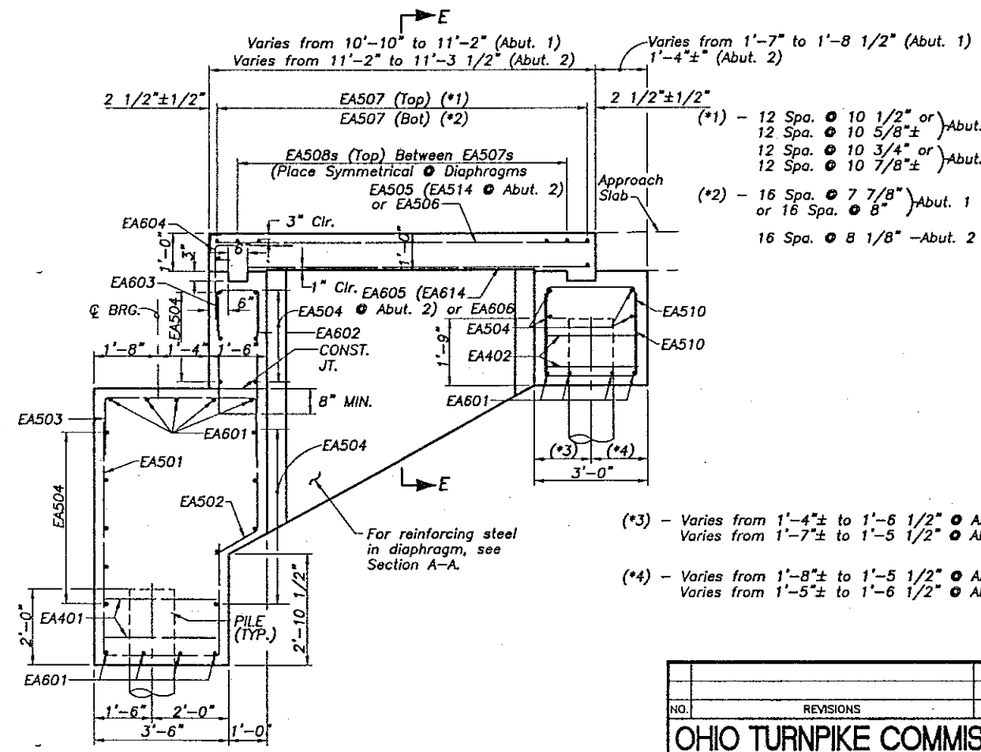

SECTION B–B
(Drain pipe & pourus backfill not shown)

NO.	REVISIONS	BY	DATE

OHIO TURNPIKE COMMISSION

ABUTMENT DETAILS
OHIO TURNPIKE OVER TINKER'S CREEK

PLANS PREPARED BY:
BARR ENGINEERING, INC.

DESIGNED: ASB	CHECKED: GEA	DATE: 8-7-97
DRAWN: CJH	IN CHARGE: ASB	SCALE: N.T.S.

M.P. 185.6

8/16

CONTRACT 43-97-14 SHEET 116 OF 143

DESIGNED BY: ASB	CKD BY: GEA	PLOTTED VIEW = PLAN
DATE: 4-15-97	DATE: 8-7-97	XREF1 = NONE
DRAWN BY: CJH	REVISED BY:	XREF2 = NONE
DATE: 6-5-97	DATE:	

PLOT SCALE = 1:24
P-166 F:\OTC\BRIDGETC\ABUTSECI.DWG MAY-20-1997

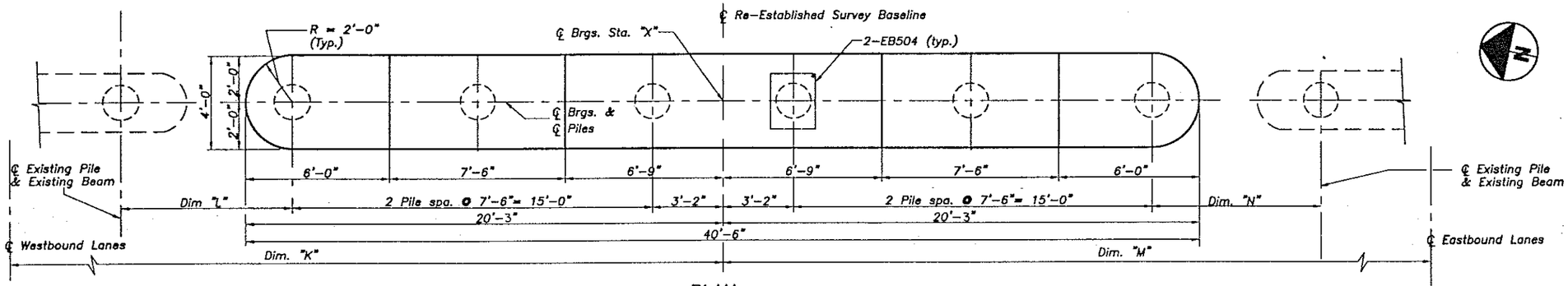

PLAN

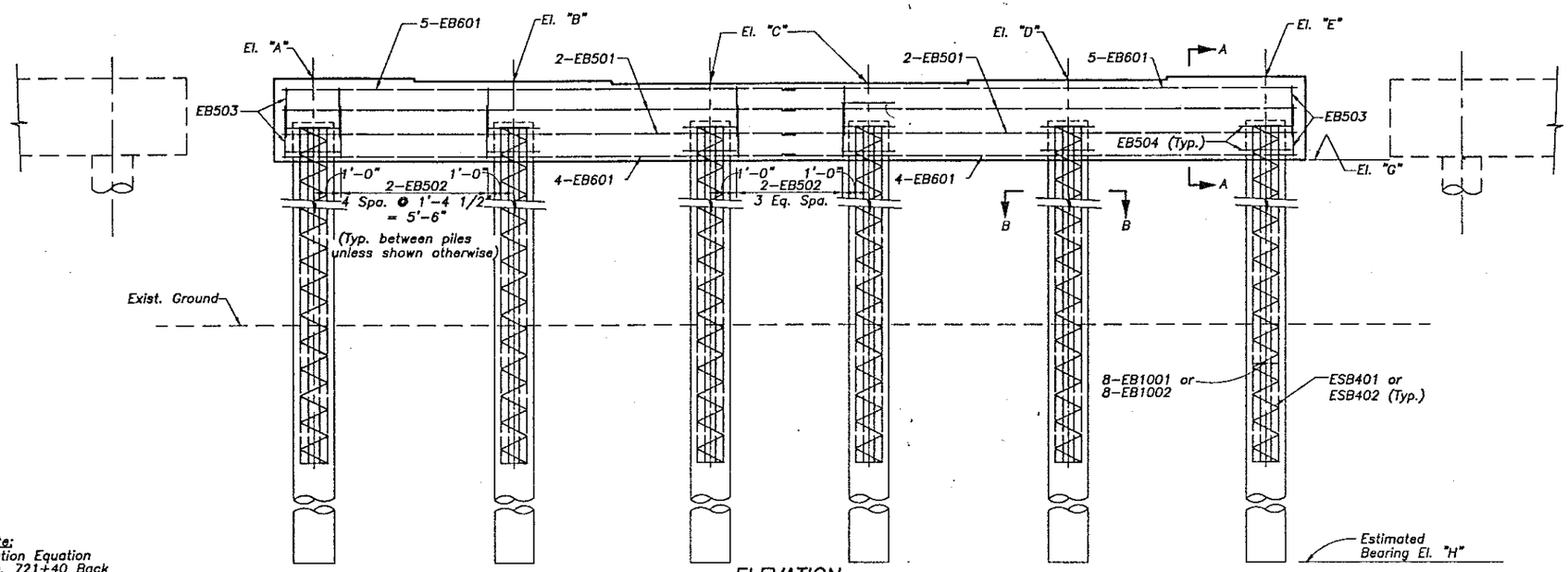

Note:
Station Equation
Sta. 721+40 Back
Sta. 0+00 Ahead

ELEVATION

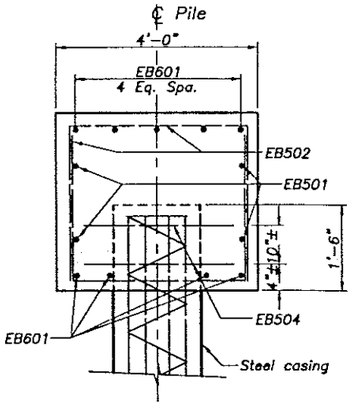

SECTION A-A

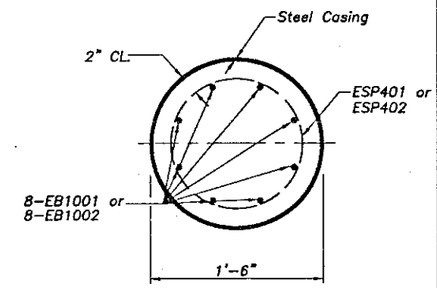

SECTION B-B

NOTES:

1. Steel pile casing shall extend to the bottom of the pier cap.
2. SURFACE UNDER BEARINGS FOR PIER SEAT: Special care shall be taken to finish the concrete under the bearings to a flat, level surface. The concrete surface shall be steel trowel finished without brushing and the flatness of the finished surface shall not vary from a straight edge laid on the surface in any direction within the limits of the bearing footprint by more than 1/16". Surfaces which fail to conform to the required flatness shall be ground until acceptable.
3. BRIDGE SEAT REINFORCING: Reinforcing steel in the vicinity of the bridge seat shall be accurately placed to avoid interference with the drilling of bearing anchor holes or the pre-setting of bearing anchors.

TABLE 1

LOCATION	℄ BRGS. STA. "X"	El. "A"	El. "B"	El. "C"	El. "D"	El. "E"	El. "G"	DIM. "K"	DIM. "L"	DIM "M"	DIM. "N"	PILE REINFORCING BARS	El. "H"	Est. Pile Length (*1)
BENT 1	713+28.39	1009.87	1009.71	1009.54	1009.68	1009.83	1006.54	40'-1 3/4"±	7'-5 3/4"±	40'-2"±	7'-6"±	ESB401 & EB1001s	954	55
BENT 2	+67.39	1010.02	1009.89	1009.77	1009.87	1009.98	1006.77	40'-1 7/8"±	7'-5 7/8"±	40'-2"±	7'-6"±	ESB401 & EB1001s	938	75
BENT 3	714+06.39	1010.29	1010.15	1010.00	1010.11	1010.22	1007.00	40'-1 7/8"±	7'-5 7/8"±	40'-2 1/8"±	7'-6 1/8"±	ESB401 & EB1001s	937	75
BENT 4	+45.39	1010.58	1010.42	1010.27	1010.38	1010.49	1007.27	40'-1 7/8"±	7'-5 7/8"±	40'-2 1/8"±	7'-6 1/8"±	ESB401 & EB1001s	938	75
BENT 5	+84.39	1010.90	1010.76	1010.61	1010.73	1010.85	1007.61	40'-2"±	7'-6"±	40'-2 1/8"±	7'-6 1/8"±	ESB401 & EB1001s	941	70
BENT 6	715+23.39	1011.30	1011.15	1011.01	1011.13	1011.26	1008.01	40'-2"±	7'-6"±	40'-2 1/8"±	7'-6 1/8"±	ESB401 & EB1001s	941	70
BENT 7	+62.39	1011.79	1011.64	1011.49	1011.64	1011.80	1008.49	40'-2"±	7'-6"±	40'-2 1/4"±	7'-6 1/4"±	ESB401 & EB1001s	941	70
BENT 8	716+01.39	1012.33	1012.18	1012.03	1012.17	1012.32	1009.03	40'-2 1/8"±	7'-6 1/8"±	40'-2 1/4"±	7'-6 1/4"±	ESB401 & EB1001s	944	70
BENT 9	+40.39	1012.91	1012.78	1012.64	1012.79	1012.94	1009.64	40'-2 1/8"±	7'-6 1/8"±	40'-2 1/4"±	7'-6 1/4"±	ESB401 & EB1001s	946	70
BENT 10	+79.39	1013.62	1013.46	1013.31	1013.49	1013.66	1010.31	40'-2 1/8"±	7'-6 1/8"±	40'-2 1/4"±	7'-6 1/4"±	ESB401 & EB1001s	945	70
BENT 11	717+18.39	1014.38	1014.21	1014.05	1014.21	1014.38	1011.05	40'-2 1/4"±	7'-6 1/4"±	40'-2 3/8"±	7'-6 3/8"±	ESB402 & EB1002s	947	70
BENT 12	+57.39	1015.11	1014.95	1014.79	1014.94	1015.10	1011.79	40'-2 1/4"±	7'-6 1/4"±	40'-2 3/8"±	7'-6 3/8"±	ESB402 & EB1002s	947	70
BENT 13	+96.39	1015.86	1015.70	1015.53	1015.69	1015.84	1012.53	40'-2 1/4"±	7'-6 1/4"±	40'-2 3/8"±	7'-6 3/8"±	ESB402 & EB1002s	947	70
BENT 14	718+35.39	1016.60	1016.44	1016.28	1016.43	1016.57	1013.28	40'-2 3/8"±	7'-6 3/8"±	40'-2 3/8"±	7'-6 3/8"±	ESB402 & EB1002s	952	65
BENT 15	+74.39	1017.34	1017.18	1017.02	1017.17	1017.33	1014.02	40'-2 3/8"±	7'-6 3/8"±	40'-2 1/2"±	7'-6 1/2"±	ESB402 & EB1002s	952	65
BENT 16	719+13.39	1018.10	1017.94	1017.77	1017.93	1018.09	1014.77	40'-2 3/8"±	7'-6 3/8"±	40'-2 1/2"±	7'-6 1/2"±	ESB402 & EB1002s	952	65
BENT 17	+52.39	1018.84	1018.68	1018.51	1018.67	1018.83	1015.51	40'-2 1/2"±	7'-6 1/2"±	40'-2 1/2"±	7'-6 1/2"±	ESB402 & EB1002s	940	80
BENT 18	+91.39	1019.60	1019.43	1019.27	1019.43	1019.59	1016.27	40'-2 1/2"±	7'-6 1/2"±	40'-2 1/2"±	7'-6 1/2"±	ESB402 & EB1002s	940	80
BENT 19	720+30.39	1020.33	1020.17	1020.00	1020.17	1020.33	1017.00	40'-2 1/2"±	7'-6 1/2"±	40'-2 5/8"±	7'-6 5/8"±	ESB402 & EB1002s	942	80
BENT 20	+69.39	1021.07	1020.91	1020.75	1020.89	1021.04	1017.75	40'-2 5/8"±	7'-6 5/8"±	40'-2 5/8"±	7'-6 5/8"±	ESB402 & EB1002s	951	70
BENT 21	721+08.39	1021.80	1021.65	1021.49	1021.64	1021.79	1018.49	40'-2 5/8"±	7'-6 5/8"±	40'-2 5/8"±	7'-6 5/8"±	ESB402 & EB1002s	953	70
BENT 22	0+07.39	1022.56	1022.40	1022.24	1022.38	1022.53	1019.24	40'-2 5/8"±	7'-6 5/8"±	40'-2 5/8"±	7'-6 5/8"±	ESB402 & EB1002s	954	70
BENT 23	0+46.39	1023.28	1023.13	1022.99	1023.15	1023.30	1019.99	40'-2 3/4"±	7'-6 3/4"±	40'-2 3/4"±	7'-6 3/4"±	ESB402 & EB1002s	956	70
BENT 24	0+85.39	1024.02	1023.88	1023.73	1023.88	1024.03	1020.73	40'-2 3/4"±	7'-6 3/4"±	40'-2 3/4"±	7'-6 3/4"±	ESB402 & EB1002s	956	70

(*1) Rounded off upward to the nearest 5'.

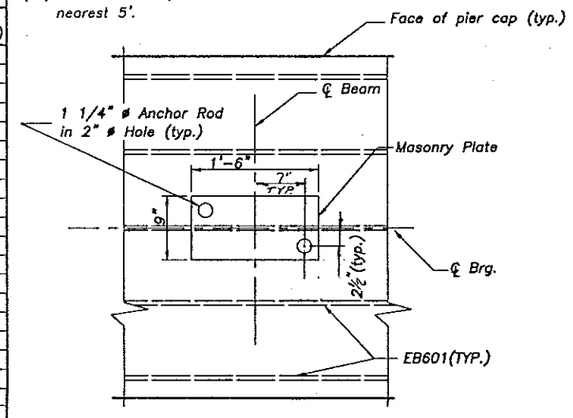

BEARING ANCHOR DETAIL

See Std. Dwg. FB-1-82 for additional notes and details

NO.	REVISIONS	BY	DATE

OHIO TURNPIKE COMMISSION

BENT DETAILS

OHIO TURNPIKE OVER TINKER'S CREEK

PLANS PREPARED BY:
BARR ENGINEERING, INC.

DESIGNED: ASB	CHECKED: GEA	DATE: 8-7-97
DRAWN: CLH	IN CHARGE: ASB	SCALE: NTS

M.P. 185.6

9/16

CONTRACT 43-97-14 SHEET 117 OF 143

DESIGNED BY: ASB DATE: 6-4-97
CHECKED BY: GEA DATE: 8-7-97
DRAWN BY: CLH DATE: 6-21-97
REVISED BY: DATE:

PLOT SCALE = 1:32
P-186 F:\OTC\BRIDGE\TC\TINKS07.DWG MAY-20-1997
PLOTTED VIEW = PLAN
XREF#1 = NONE
XREF#2 = NONE

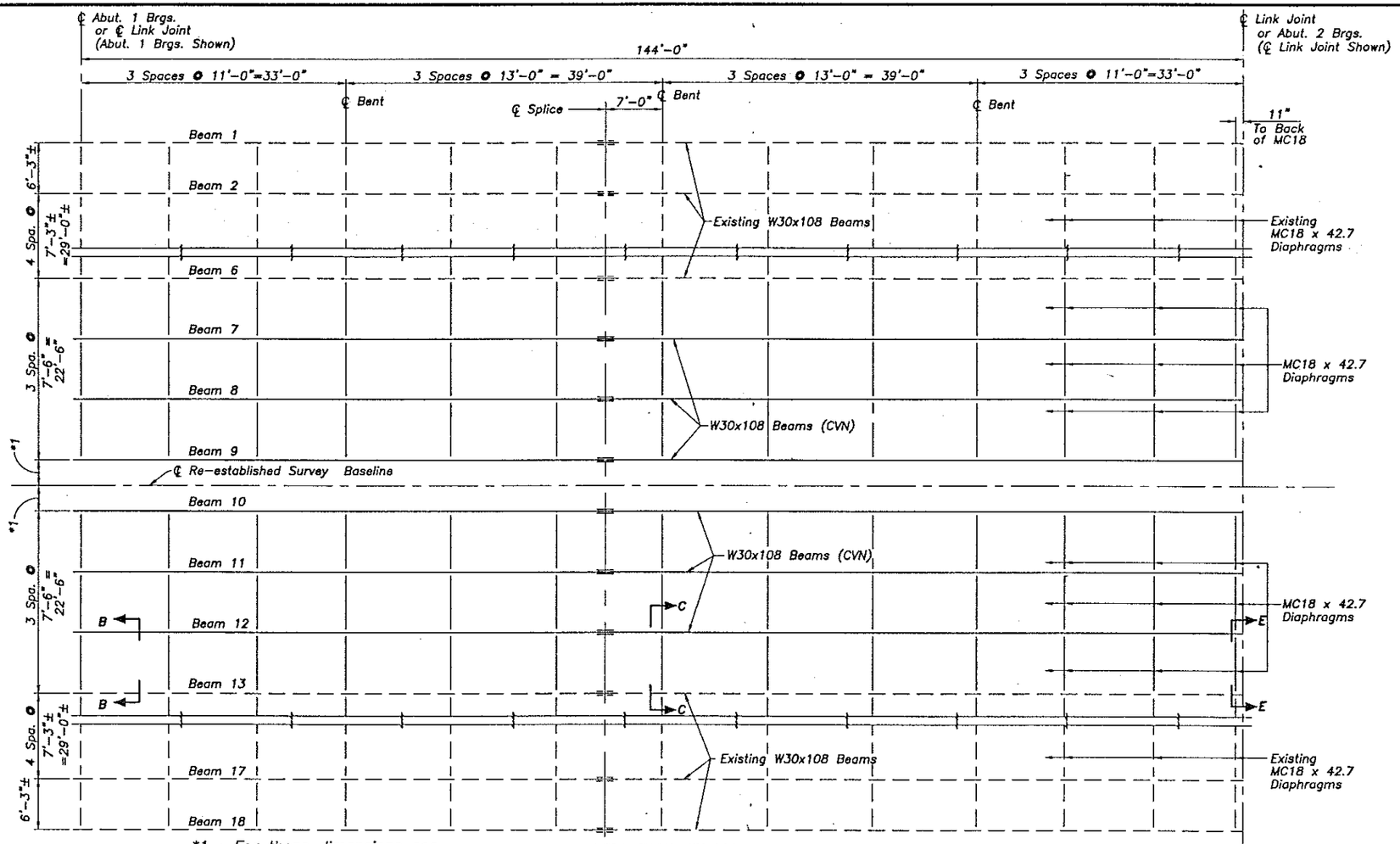

*1 – For these dimensions see Bridge geometry Diagram, sheet 1/16

FRAMING PLAN

Units A–1, A–2, A–3, & A–4

NOTES

1. All structural steel shall be ASTM A36 unless noted otherwise.
2. High strength bolts shall be 1" diameter galvanized conforming to ASTM A325 unless noted otherwise. See SP711 & SP513.
3. The diaphragm connection bolts between beams 6 & 7 and beams 12 & 13 shall not be tighten until after the deck concrete is placed.
4. Where a shape or plate is designated (CVN) the material shall meet specified minimum notch toughness requirements as specified in 711.01 of the specifications.
5. The steel beams shall not be cambered. Beams shall be fabricated with their natural camber up.
6. Welded attachments for supports of concrete deck finishing machine or any other purpose is prohibited. Only those welds shown on the plans for attachment of bearings and stiffeners shall be permitted.
7. For link joint details, splice details Section E–E, and Section H–H, see sheet 11/16 .
8. For additional notes, see sheet 03/05 .

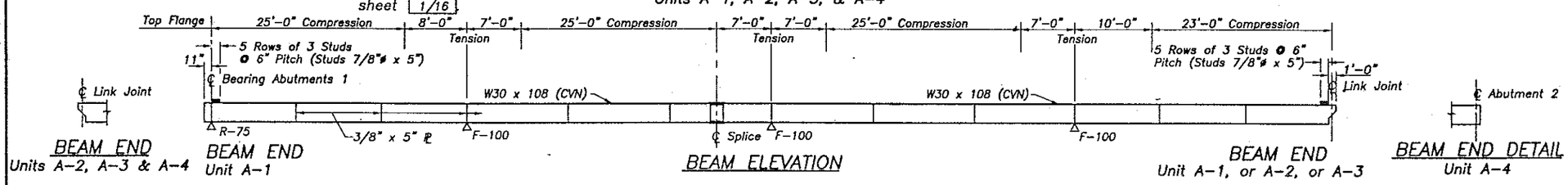

BEAM END

Units A–2, A–3 & A–4

BEAM END

Unit A–1

BEAM ELEVATION

BEAM END

Unit A–1, or A–2, or A–3

BEAM END DETAIL

Unit A–4

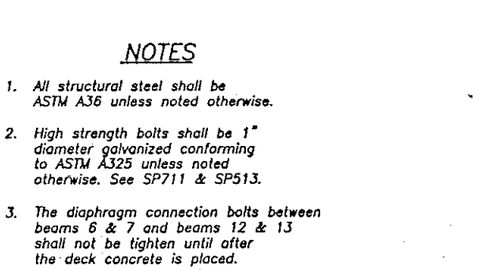

SECTION H–H

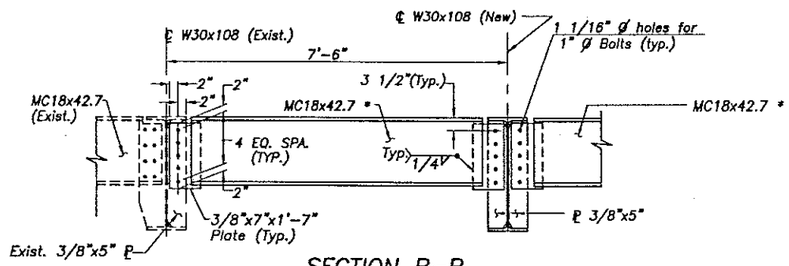

SECTION B–B

* Sloped to match joint

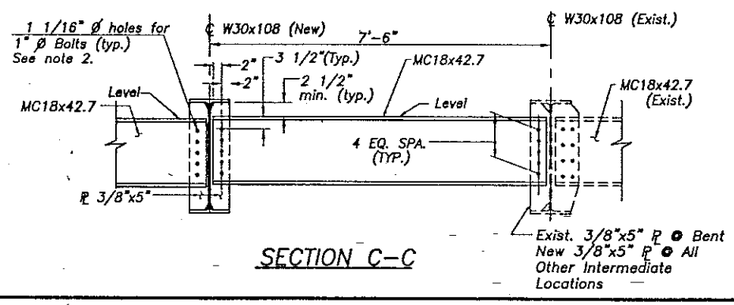

SECTION C–C

NO.	REVISIONS	BY	DATE

OHIO TURNPIKE COMMISSION

SUPERSTRUCTURE DETAILS
OHIO TURNPIKE OVER TINKER'S CREEK

PLANS PREPARED BY:
BARR ENGINEERING, INC.

M.P. 185.6	DESIGNED: ASB	CHECKED: GEA	DATE: 8-7-97
	DRAWN: CLH	IN CHARGE: ASB	SCALE: N.T.S.
10/16	CONTRACT 43-97-14 SHEET 11B OF 143		

PLOT SCALE = 1:96
GS-200 F:\OTC\BRIDGETC\FRAMPL1.DWG JULY-13-1997

PLOTTED VIEW = PLAN
XREF(s) = NONE
XREF(s) = NONE

DESIGNED BY: ASB	CHECKED BY: GEA		
DATE: 6-18-97	8-7-97	REVISED BY:	
DRAWN BY: CLH			
DATE: 6-21-97		DATE:	

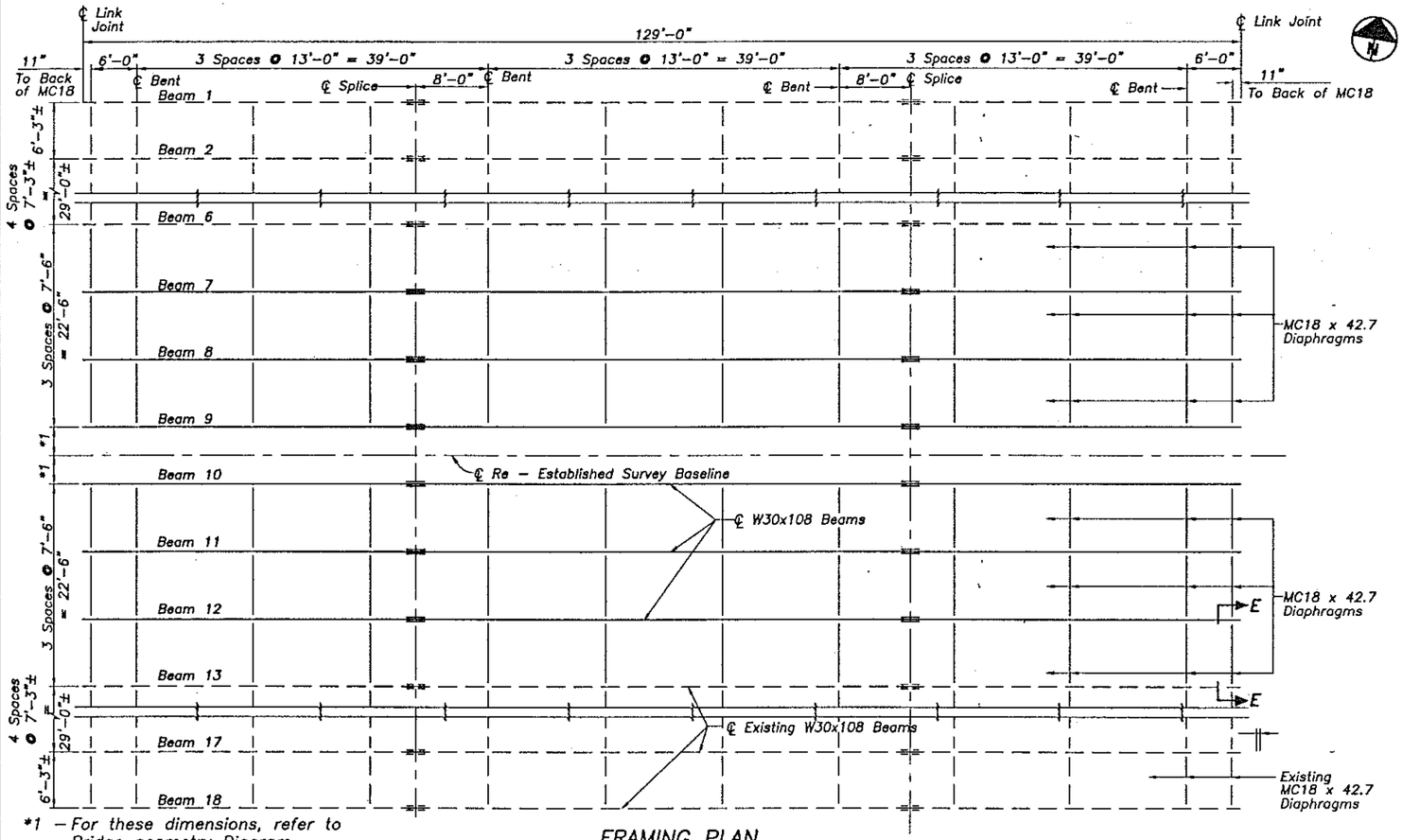

*1 – For these dimensions, refer to Bridge geometry Diagram, sheet 1/16

FRAMING PLAN

Units B-1, B-2 & B-3

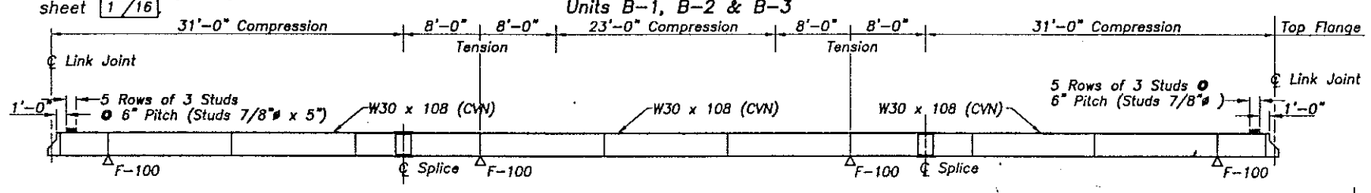

BEAM ELEVATION

NOTES

1. For sections B-B, C-C and additional notes, see sheet 10/16
2. All the structural steel link joint components shall be (CVN), and 100 percent of their base material shall be tested by ultrasonic inspection to ensure the soundness of material against laminations and inclusions. The non-destructive testing shall conform to the latest American Society Structural code and shall be incidental to the cost of Item 513, Structural Steel (A36), AISC Category I.
3. See special provision, SP528, "Rivet and Bolt Replacement" for additional information
4. Reference shall be made to Ohio Department of Transportation Standard Drawings RB-1-55 and FB-1-82 for bearing details.
5. All field splices shall be made with 1"ø A325 high strength bolts. Bolts shall be placed with their heads on the bottom of bottom flange plates and on the top of top flange plates.

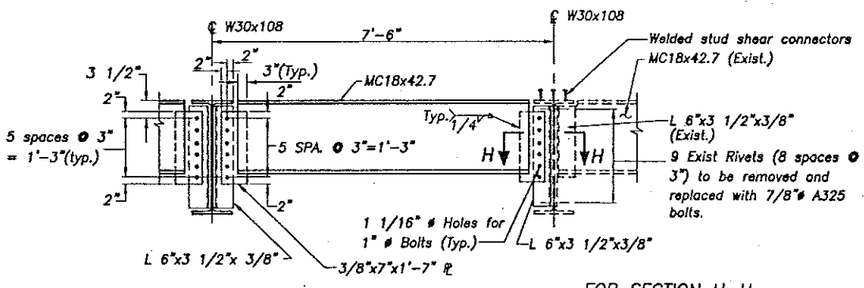

FOR SECTION H-H, SEE SHEET 10/16

SECTION E-E

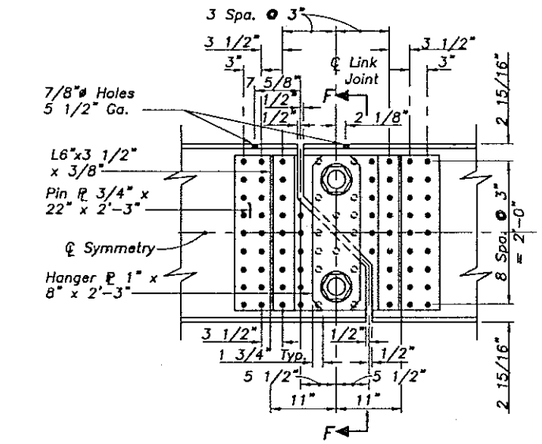

LINK JOINT DETAIL

(TYPICAL)

- Denotes 7/8"ø H.S. Bolts
- Denotes 1"ø Holes in pin plates for plug weld to web. Grind Smooth.

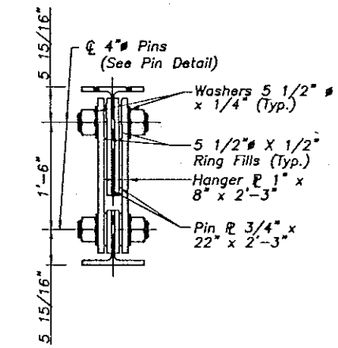

SECTION F-F

4 1/32"ø Hole through web, pin plates, ring fills and hanger plates for 4"ø pins.

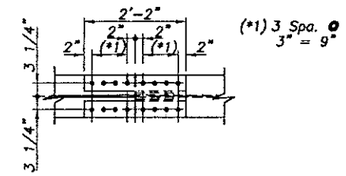

SECTION A-A

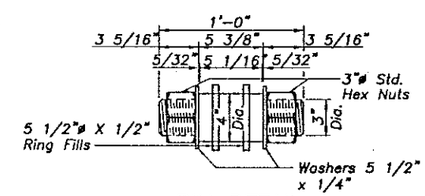

PIN DETAIL

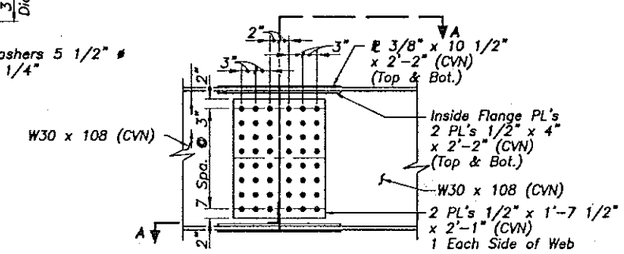

SPLICE DETAIL

TYPICAL EACH SPLICE

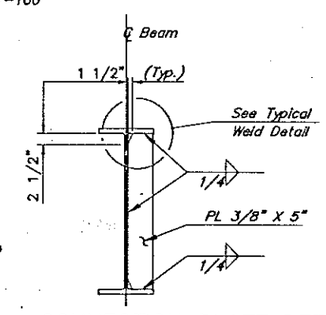

CONNECTION PLATE DETAIL

(PROVIDE FIELD WELDS FOR EXISTING BEAMS)

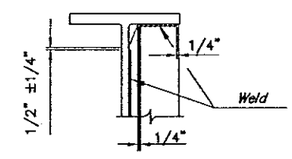

TYPICAL WELD DETAIL

NO.	REVISIONS	BY	DATE

OHIO TURNPIKE COMMISSION

SUPERSTRUCTURE DETAILS
OHIO TURNPIKE OVER TINKER'S CREEK

PLANS PREPARED BY:
BARR ENGINEERING, INC.

M.P. 185.6	DESIGNED: ASB	CHECKED: GEA	DATE: 8-7-97
	DRAWN: CLH	IN CHARGE: ASB	SCALE: 1=64
11/16	CONTRACT 43-97-14 SHEET 119 OF 143		

DESIGNED BY: ASB CHECKED BY: GEA DATE: 5-4-97 E: 8-7-97
DRAWN BY: CLH REVISED BY: DATE: 5-12-97 DATE:
PLOTTED VIEW = PLAN XREF(S) = NONE XREF(S) = NONE
PLOT SCALE = 1=96 GR-200 F:\OTC\BRIDGETC\FRAMPLZ.DWG JULY-14-1997

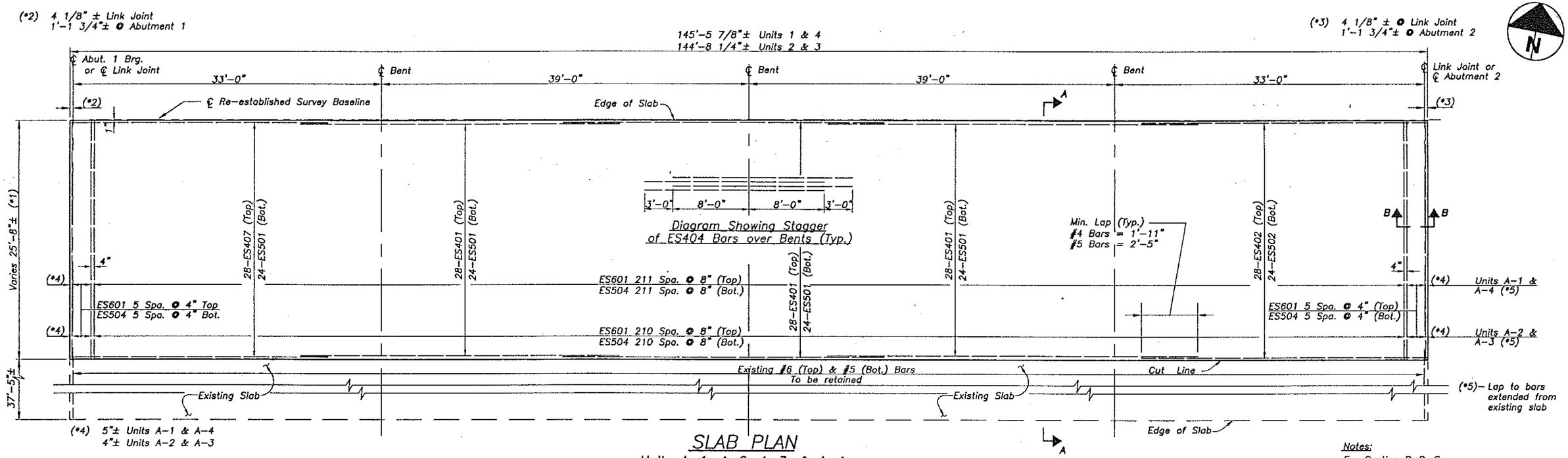

SLAB PLAN

Units A-1, A-2, A-3, & A-4

Eastbound Bridge Shown, Westbound Bridge Symmetrical about ℄ Re-established Survey Baseline

(*1) See transverse section, sheet 13/16 .

Notes:

For Section B-B, See Sheet 13/16 .

Longitudinal or Transverse Construction Joints shall not be permitted in the Deck Slab.

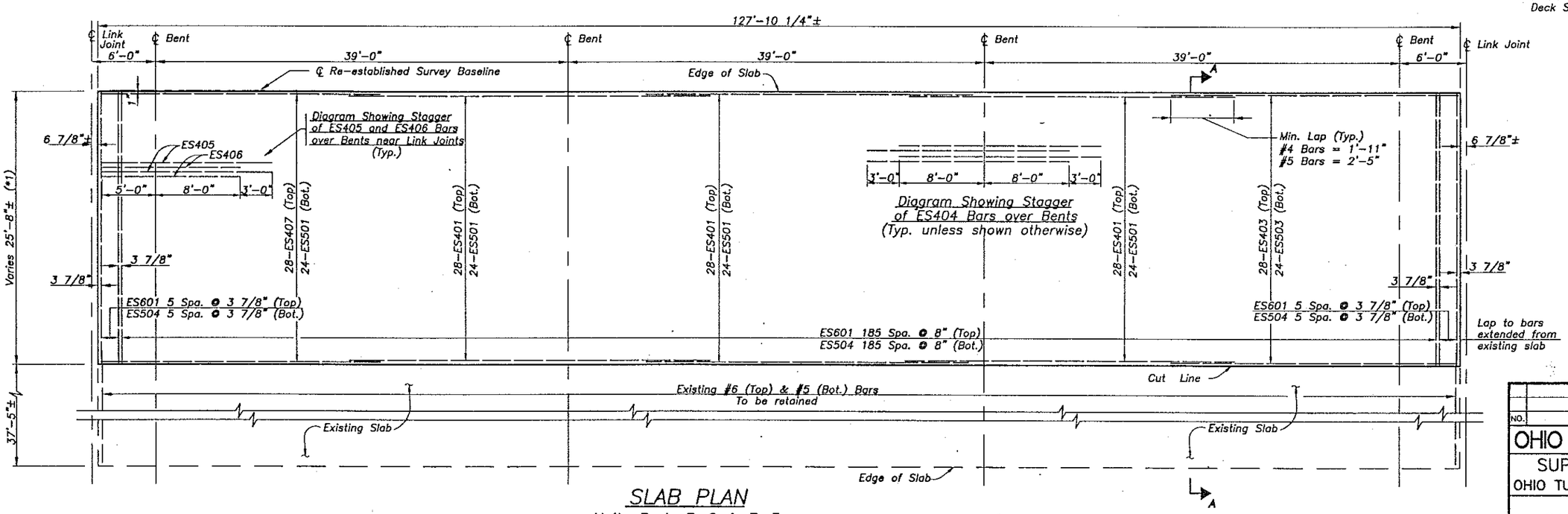

SLAB PLAN

Units B-1, B-2 & B-3

Eastbound Bridge Shown, Westbound Bridge Symmetrical about ℄ Re-established Survey Baseline

NO.	REVISIONS	BY	DATE

OHIO TURNPIKE COMMISSION

SUPERSTRUCTURE DETAILS

OHIO TURNPIKE OVER TINKER'S CREEK

PLANS PREPARED BY:

BARR ENGINEERING, INC.

DESIGNED: ASB	CHECKED: GEA	DATE: 8-7-97
DRAWN: CLH	IN CHARGE: ASB	SCALE: N.T.S.

M.P. 185.6

12/16

CONTRACT 43-97-14 SHEET 120 OF 143

DESIGNED BY: ASB DATE: 5-18-97
CHECKED BY: GEA 8-7-97
DRAWN BY: CLH DATE: 5-21-97
REVISED BY: DATE:
PLOT SCALE = 1=64 P-166 F:\OTC\BRIDGETC\SLASP1.1.DWG MAY-19-1997
PLOTTED VIEW = PLAN XREF'S = NONE REC'S = NONE

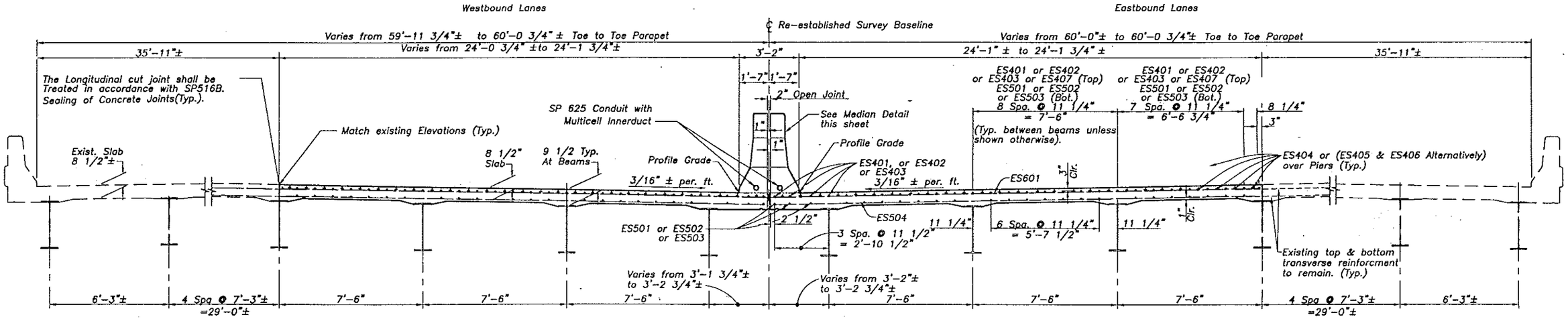

SECTION A-A

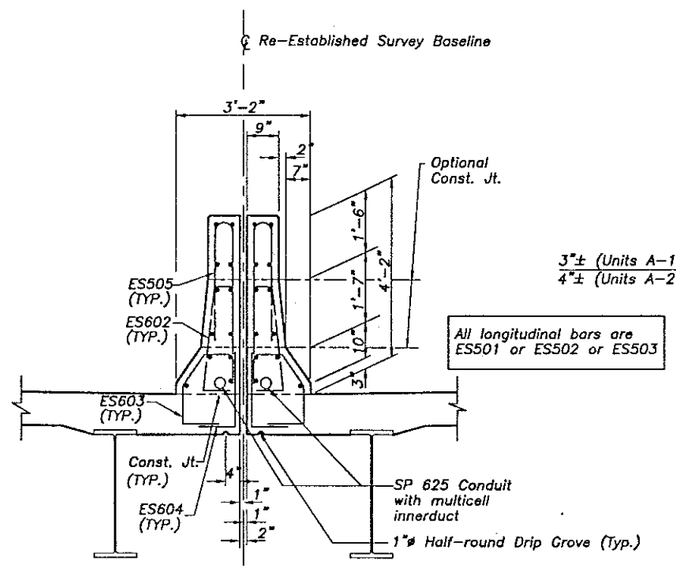

MEDIAN DETAIL

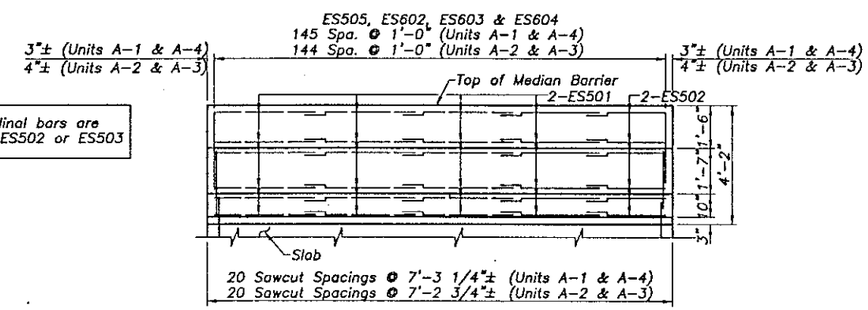

MEDIAN BARRIER ELEVATION

(Units A-1, A-2, A-3 & A-4)

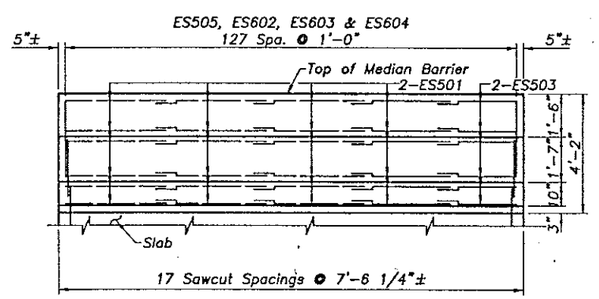

MEDIAN BARRIER ELEVATION

(Units B-1, B-2 & B-3)

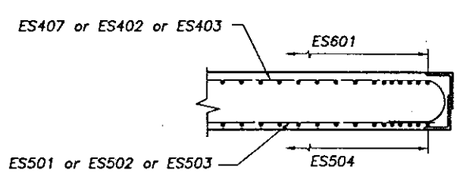

SECTION B-B

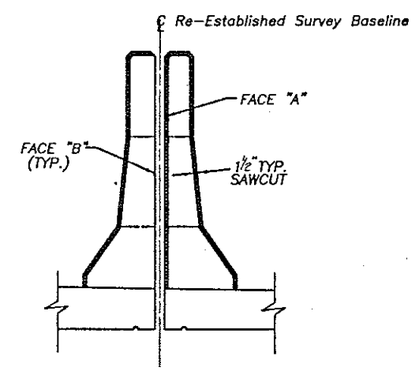

SECTION THROUGH SAWCUT

WHERE RIGHT HALF (AS DRAWN) IS CONSTRUCTED FIRST, SAWCUT FACE "A". SAWCUT FACE "B" IF LEFT HALF IS CONSTRUCTED FIRST.

See sheet G2/G5 for addition requirements.

NOTES:

1. DECK SLAB DEPTH
   The distance shown from the top of deck slab to the top of steel beam is the theoretical design dimension. The quantity of deck concrete to be paid for shall be based on this dimension, even though deviation from it may be necessary because the top flange may not have the exact camber of conformation required to place it parallel to the finished grade.
2. For locations of units A-1 thru A-4 and B-1 thru B-3, see sheets 1/16 & 2/16.
3. For SLAB PLAN of units A-1 thru A-4, B-1 thru B-3 and additional slab details, see sheet 12/16.
4. For details of scuppers see sheet 14/16.
5. For additional notes, see structural general notes sheet G2/G5.

NO.	REVISIONS	BY	DATE

OHIO TURNPIKE COMMISSION

SUPERSTRUCTURE DETAILS

OHIO TURNPIKE OVER TINKER'S CREEK

PLANS PREPARED BY:
BARR ENGINEERING, INC.

DESIGNED: ASB	CHECKED: GEA	DATE: 8-7-97
DRAWN: CLH	IN CHARGE: ASB	SCALE: N.T.S.

M.P. 185.6

13 / 16

CONTRACT 43-97-14 SHEET 121 OF 143

DESIGNED BY: ASB
DATE: 4-12-97
DRAWN BY: CLH
DATE: 5-13-97
CHECKED BY: GEA
DATE: 8-7-97
REVISED BY:
DATE:
PLOTTED VIEW = PLAN
XREF = NONE
XREF = NONE
PLOT SCALE = 1:32
P-165 J:\OTC\BRIDGETC\SLABTS.DWG
MAY-20-1997

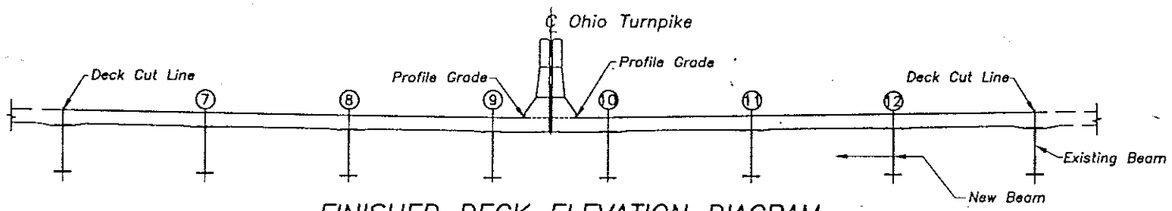

FINISHED DECK ELEVATION DIAGRAM

TABLE OF FINISHED DECK ELEVATIONS

DESCRIPTION	WESTBOUND BRIDGE Cut Line Elevation	Beam 7	Beam 8	Beam 9	Profile Grade	EASTBOUND BRIDGE Beam 10	Beam 11	Beam 12	Cut Line Elevation
℄ BRG ABUT 1	1013.71 ±	1013.51	1013.32	1013.12	1013.08	1013.12	1013.32	1013.52	1013.72 ±
1/2 SPAN	1013.75 ±	1013.57	1013.39	1013.22	1013.18	1013.21	1013.38	1013.55	1013.72 ±
℄ BRG BENT 1	1013.79 ±	1013.63	1013.47	1013.31	1013.27	1013.30	1013.45	1013.59	1013.73 ±
1/2 SPAN	1013.82 ±	1013.68	1013.55	1013.41	1013.39	1013.41	1013.52	1013.63	1013.74 ±
℄ BRG BENT 2	1013.90 ±	1013.78	1013.65	1013.53	1013.50	1013.52	1013.63	1013.74	1013.85 ±
1/2 SPAN	1014.02 ±	1013.89	1013.77	1013.64	1013.61	1013.64	1013.75	1013.86	1013.97 ±
℄ BRG BENT 3	1014.20 ±	1014.05	1013.91	1013.76	1013.73	1013.75	1013.87	1013.98	1014.10 ±
1/2 SPAN	1014.35 ±	1014.20	1014.04	1013.89	1013.86	1013.88	1014.00	1014.12	1014.24 ±
℄ LINK JT	1014.41 ±	1014.27	1014.13	1013.98	1013.95	1013.98	1014.10	1014.21	1014.33 ±
℄ BRG BENT 4	1014.49 ±	1014.34	1014.18	1014.03	1014.00	1014.02	1014.14	1014.25	1014.37 ±
1/2 SPAN	1014.63 ±	1014.48	1014.34	1014.19	1014.16	1014.19	1014.30	1014.42	1014.54 ±
℄ BRG BENT 5	1014.81 ±	1014.66	1014.52	1014.37	1014.34	1014.36	1014.49	1014.61	1014.73 ±
1/2 SPAN	1015.00 ±	1014.85	1014.71	1014.56	1014.53	1014.56	1014.66	1014.77	1014.88 ±
℄ BRG BENT 6	1015.20 ±	1015.06	1014.92	1014.77	1014.74	1014.77	1014.90	1015.02	1015.15 ±
1/2 SPAN	1015.42 ±	1015.28	1015.14	1015.00	1014.97	1015.00	1015.12	1015.25	1015.37 ±
℄ BRG BENT 7	1015.70 ±	1015.55	1015.40	1015.25	1015.22	1015.25	1015.40	1015.56	1015.71 ±
℄ LINK JT	1015.78 ±	1015.63	1015.48	1015.33	1015.30	1015.33	1015.47	1015.62	1015.76 ±
1/2 SPAN	1015.98 ±	1015.82	1015.67	1015.51	1015.48	1015.51	1015.66	1015.81	1015.96 ±
℄ BRG BENT 8	1016.24 ±	1016.09	1015.94	1015.79	1015.76	1015.79	1015.93	1016.08	1016.22 ±
1/2 SPAN	1016.53 ±	1016.38	1016.23	1016.08	1016.05	1016.08	1016.23	1016.37	1016.52 ±
℄ BRG BENT 9	1016.81 ±	1016.67	1016.53	1016.39	1016.37	1016.40	1016.55	1016.70	1016.85 ±
1/2 SPAN	1017.24 ±	1017.07	1016.90	1016.73	1016.69	1016.73	1016.88	1017.04	1017.19 ±
℄ BRG BENT 10	1017.53 ±	1017.38	1017.23	1017.07	1017.04	1017.08	1017.25	1017.42	1017.59 ±
1/2 SPAN	1017.90 ±	1017.75	1017.59	1017.44	1017.40	1017.44	1017.58	1017.73	1017.87 ±
℄ LINK JT	1018.18 ±	1018.02	1017.85	1017.69	1017.66	1017.69	1017.85	1018.00	1018.16 ±
℄ BRG BENT 11	1018.30 ±	1018.14	1017.97	1017.81	1017.77	1017.81	1017.97	1018.14	1018.30 ±
1/2 SPAN	1018.66 ±	1018.50	1018.34	1018.18	1018.14	1018.18	1018.34	1018.49	1018.65 ±
℄ BRG BENT 12	1019.03 ±	1018.87	1018.71	1018.55	1018.52	1018.55	1018.70	1018.86	1019.01 ±
1/2 SPAN	1019.41 ±	1019.25	1019.09	1018.92	1018.89	1018.92	1019.08	1019.23	1019.39 ±
℄ BRG BENT 13	1019.78 ±	1019.62	1019.46	1019.30	1019.26	1019.29	1019.45	1019.60	1019.76 ±
1/2 SPAN	1020.16 ±	1020.00	1019.83	1019.67	1019.63	1019.67	1019.82	1019.97	1020.12 ±
℄ BRG BENT 14	1020.52 ±	1020.36	1020.20	1020.04	1020.01	1020.04	1020.19	1020.33	1020.48 ±
℄ LINK JT	1020.60 ±	1020.45	1020.30	1020.15	1020.12	1020.15	1020.29	1020.43	1020.57 ±
1/2 SPAN	1020.86 ±	1020.71	1020.56	1020.41	1020.38	1020.41	1020.55	1020.70	1020.84 ±
℄ BRG BENT 15	1021.26 ±	1021.10	1020.94	1020.78	1020.75	1020.78	1020.94	1021.09	1021.24 ±
1/2 SPAN	1021.64 ±	1021.48	1021.32	1021.16	1021.12	1021.15	1021.29	1021.43	1021.57 ±
℄ BRG BENT 16	1022.02 ±	1021.86	1021.69	1021.53	1021.50	1021.53	1021.69	1021.85	1022.01 ±
1/2 SPAN	1022.36 ±	1022.21	1022.05	1021.90	1021.87	1021.90	1022.05	1022.21	1022.36 ±
℄ BRG BENT 17	1022.76 ±	1022.60	1022.44	1022.28	1022.24	1022.27	1022.43	1022.59	1022.75 ±
1/2 SPAN	1023.13 ±	1022.97	1022.81	1022.65	1022.61	1022.65	1022.81	1022.97	1023.13 ±
℄ LINK JT	1023.41 ±	1023.24	1023.07	1022.91	1022.87	1022.91	1023.06	1023.22	1023.38 ±
℄ BRG BENT 18	1023.53 ±	1023.36	1023.19	1023.02	1022.99	1023.02	1023.18	1023.35	1023.51 ±
1/2 SPAN	1023.86 ±	1023.70	1023.55	1023.39	1023.36	1023.39	1023.53	1023.68	1023.82 ±
℄ BRG BENT 19	1024.25 ±	1024.09	1023.93	1023.76	1023.73	1023.77	1023.93	1024.09	1024.25 ±
1/2 SPAN	1024.59 ±	1024.44	1024.29	1024.14	1024.10	1024.13	1024.27	1024.41	1024.55 ±
℄ BRG BENT 20	1024.99 ±	1024.83	1024.67	1024.51	1024.48	1024.51	1024.65	1024.80	1024.94 ±
1/2 SPAN	1025.34 ±	1025.19	1025.03	1024.88	1024.85	1024.88	1025.02	1025.17	1025.31 ±
℄ BRG BENT 21	1025.72 ±	1025.56	1025.41	1025.25	1025.22	1025.25	1025.40	1025.55	1025.70 ±
℄ LINK JT	1025.83 ±	1025.68	1025.52	1025.37	1025.33	1025.37	1025.51	1025.65	1025.79 ±
1/2 SPAN	1026.10 ±	1025.94	1025.78	1025.63	1025.59	1025.62	1025.77	1025.92	1026.07 ±
℄ BRG BENT 22	1026.48 ±	1026.32	1026.16	1026.00	1025.97	1026.00	1026.14	1026.29	1026.43 ±
1/2 SPAN	1026.83 ±	1026.68	1026.53	1026.38	1026.34	1026.37	1026.52	1026.66	1026.81 ±
℄ BRG BENT 23	1027.18 ±	1027.04	1026.89	1026.75	1026.72	1026.75	1026.91	1027.06	1027.22 ±
1/2 SPAN	1027.53 ±	1027.39	1027.26	1027.12	1027.09	1027.12	1027.26	1027.40	1027.54 ±
℄ BRG BENT 24	1027.93 ±	1027.78	1027.64	1027.49	1027.46	1027.49	1027.64	1027.79	1027.94 ±
1/2 SPAN	1028.27 ±	1028.12	1027.96	1027.81	1027.78	1027.81	1027.95	1028.09	1028.23 ±
℄ BRG ABUT 2	1028.61 ±	1028.45	1028.29	1028.13	1028.09	1028.12	1028.26	1028.40	1028.54 ±

NOTES

1. The contractor shall also compute the deck screed elevations, utilizing the dead load deflection of 1/8" at the 1/2 span. No adjustment is required at abutments, bents or hinges.

SCUPPER NOTES:

A. Saw cut existing slab to a minimum depth of 1 1/2" prior to slab removal. The exist. reinforcing steel to remain and be reuse shall be cleaned and the coating repaired. The cost is to be incidental to Item SP202 Portions of Structure Removed.
B. Scupper supports to be removed and the remainder to be ground smooth to the beam flange.
C. The cost of removal of the exist. scuppers, scupper supports and all associated work shall be incidental to Item SP202 Portions of Structure Removed.
D. Field drill and grout as per SP853 new #5 bars 12" into existing deck slab. New bars shall be placed at mid depth of slab and no greater than 12" on center.
E. Seal joint as per SP516B.

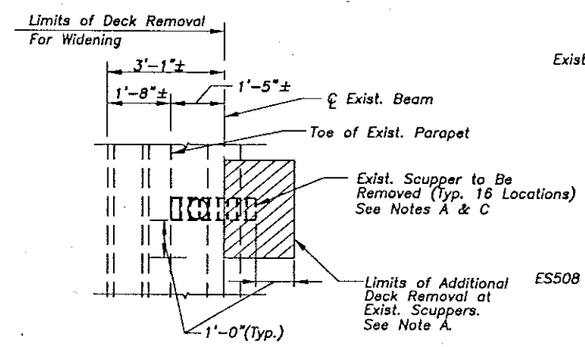

SCUPPER REMOVAL DETAIL

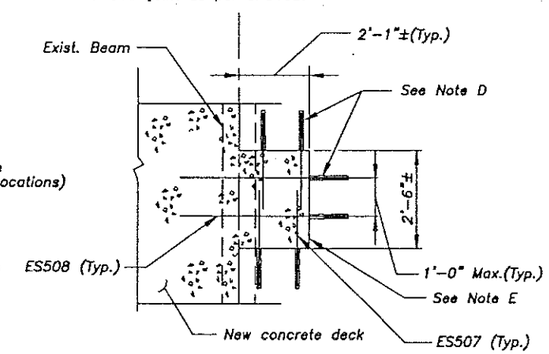

SCUPPER INFILL DETAIL

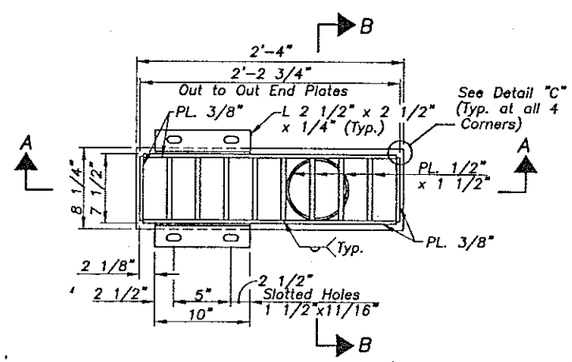

SCUPPER PLAN

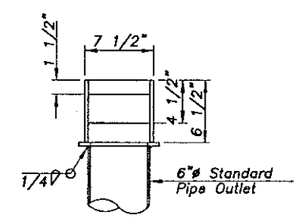

SECTION B-B

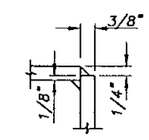

DETAIL "C"

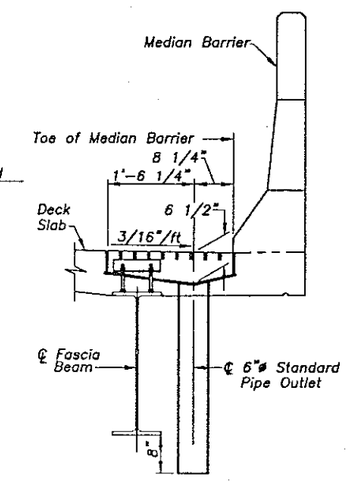

TYPICAL SECTION

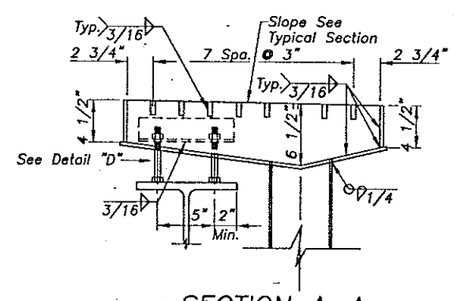

SECTION A-A

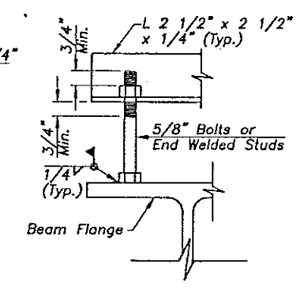

DETAIL "D"

NO.	REVISIONS	BY	DATE

OHIO TURNPIKE COMMISSION

SUPERSTRUCTURE DETAILS
OHIO TURNPIKE OVER TINKER'S CREEK

PLANS PREPARED BY:
BARR ENGINEERING, INC.

DESIGNED: ASB	CHECKED: GEA	DATE: 8-7-97
DRAWN: CJH	IN CHARGE: ASB	SCALE: N.T.S.

M.P. 185.6
14 / 16

CONTRACT 43-97-14 SHEET 122 OF 143

DESIGNED BY: ASB DATE: 5-4-97
CHECKED BY: GEA DATE: 8-7-97
DRAWN BY: CJH DATE: 6-25-97
REVISED BY: DATE:

PLOT SCALE = 1:1 PLOT DATE = JULY-11-1997
P-166 F:\OTC\BRIDGETC\TINKS02.DWG

PLOTTED VIEW = PLAN
REF = NONE
XREF = NONE

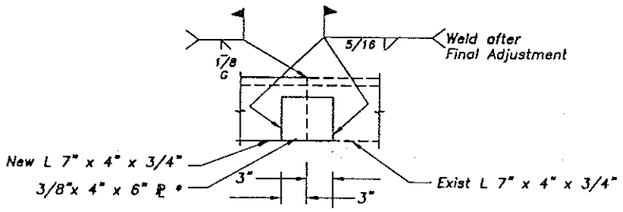

DETAIL H

* Use plate on abutment side only

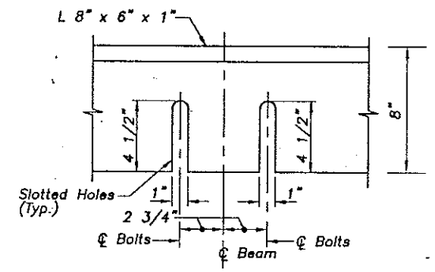

DETAIL "E"

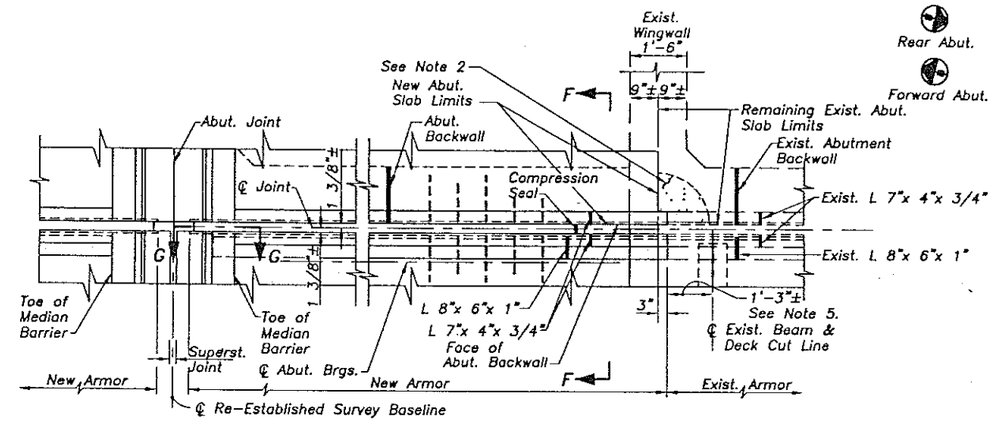

ABUTMENT EXPANSION JOINT PLAN

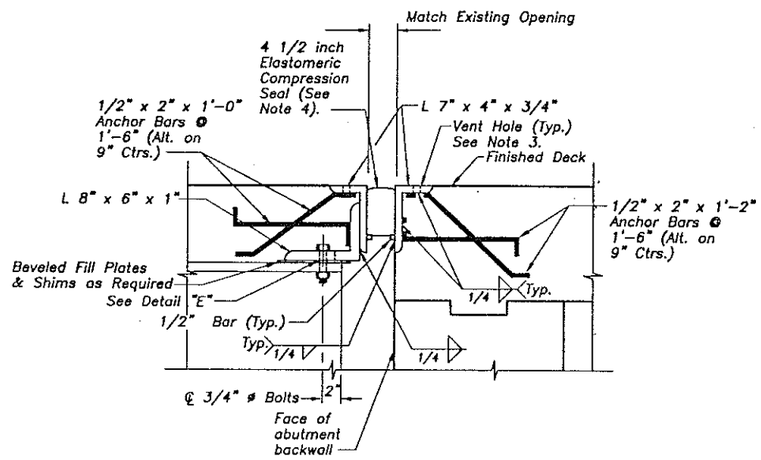

SECTION F-F

(Abutment)

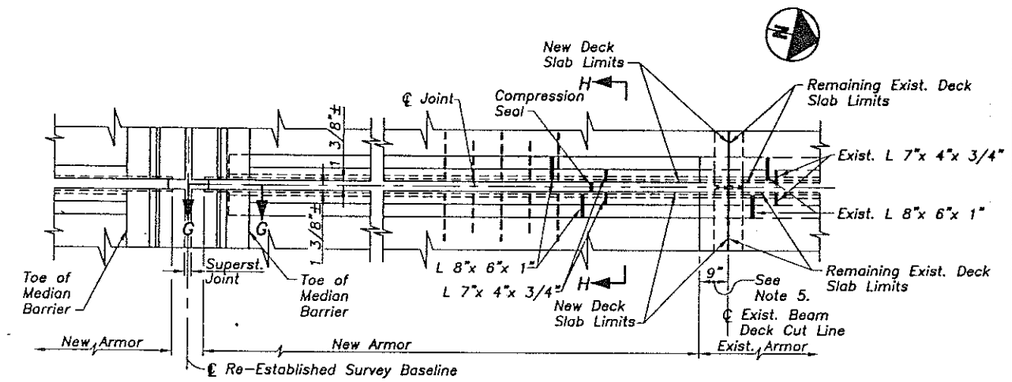

INTERMEDIATE EXPANSION JOINT PLAN

(At Link Joint)

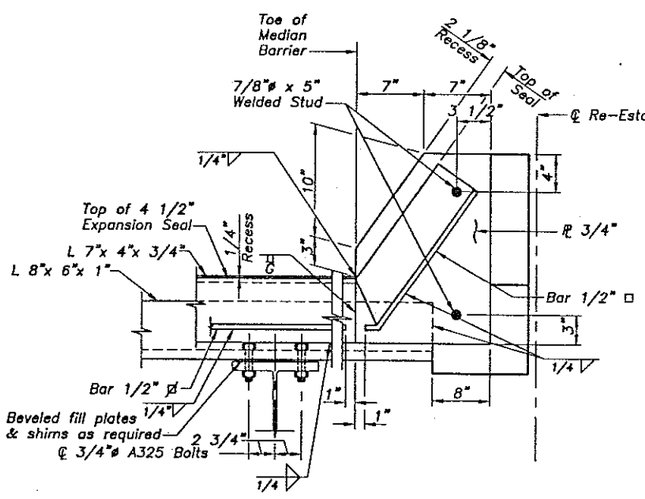

SECTION G-G

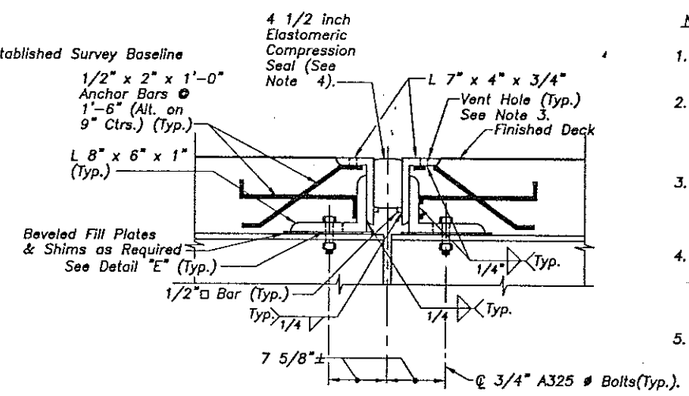

SECTION H-H

(Link Joint)

Notes:

1. Each element of new armor shall be field butt welded to the corresponding element of existing armor (to remain). See Detail H.
2. Remove existing abutment slab concrete (leaving reinforcing steel in place) as necessary to make connection between the existing and the new armor. On completing the connection, replace the slab concrete. Payment included under Item SP533.
3. The 1/2" dia. vent holes shall be filled in with non-shrink epoxy mortar. After the slab concrete is set or as directed by the engineer. The cost of filling in the vent holes shall be incidental to the cost of Item SP511 "Class S Concrete Superstructure Deck, using shrinkage compensating cement."
4. Existing compression seals shall be removed and replaced with one continuous piece for both eastbound and westbound structures. See SP533C for information. See special provision SP533A "Elastomeric Compression Seal in Structural Steel Expansion Joints" and OTC Standard Drawings DKJ-1 & DKJ-2 for additional information.
5. Care shall be taken to protect the existing armor to remain while removing superstructure concrete in this area.

NO.	REVISIONS	BY	DATE

OHIO TURNPIKE COMMISSION

SUPERSTRUCTURE DETAILS

OHIO TURNPIKE OVER TINKERS CREEK

PLANS PREPARED BY:

BARR ENGINEERING, INC.

DESIGNED: ASB	CHECKED: GEA	DATE: 8-7-97
DRAWN: CLH	IN CHARGE: ASB	SCALE: N.T.S.

M.P. 185.6

15 / 16

CONTRACT 43-97-14 SHEET 123 OF 143

DESIGNED BY: ASB | CHECKED BY: GEA
DATE: 5-1-97 | DATE: 8-7-97
DRAWN BY: CLH | ISED BY:
DATE: 6-18-97 | DATE:

PLOTTED VIEW = PLAN
SHEET = NONE
XREF = NONE

PLOT SCALE = 1=24
PT-186 F:\OTC\BRIDGE\C\ABUTSEC2.DWG MAY-19-1997

REINFORCING STEEL LIST

ABUTMENTS

MARK	NUMBER Abut. 1	NUMBER Abut. 2	NUMBER Total	LENGTH	WEIGHT	TYPE	A	B	C	D	E	REMARKS
EA401	16	16	32	10'-3"	219	1	3'-0"	1'-9"				
EA402	12	12	24	9'-3"	148	1	2'-6"	1'-9"				
EA501	38	38	76	12'-7"	997	2	3'-0"	6'-4"	3'-6"			
EA502	38	38	76	5'-5"	429	9	2'-0"	1'-0"	3'-3"			
EA503	38	38	76	8'-9"	694	2	4'-0"	2'-6"	2'-6"			
EA504	80	80	160	12'-9"	2129	STR.						
EA505	24	–	24	10'-5"	261	STR.						
EA506	48	48	96	10'-7"	1060	STR.						
EA507	120	120	240	12'-9"	3192	STR.						
EA508	24	24	48	8'-6"	426	STR.						
EA509	72	72	144	2'-6"	375	STR.						
EA510	64	64	128	6'-7"	879	2	2'-6"	2'-2"	2'-2"			
EA511	8 series of 4	8 series of 4	16 series of 4	2'-0" TO 8'-0"	334	STR.	Vary by 2'-0"					
EA512	24	24	48	10'-0"	501	STR.						
EA513	24	24	48	5'-9"	288	7	0'-5"	2'-9"				
EA514	–	24	24	10'-8"	257	STR.						
EA620	8	8	16	4'-8"	112	STR.						
EA621	8	8	16	3'-0"	72	STR.						
EA601	52	52	104	13'-0"	2031	STR.						
EA602	38	38	76	7'-10"	894	2	1'-2"	3'-6"	3'-6"			
EA603	38	38	76	5'-10"	666	2	1'-2"	2'-6"	2'-6"			
EA604	62	62	124	4'-10"	900	3	3'-0"*	2'-0"				* Vertical Leg
EA605	48	–	48	10'-5"	751	STR.						
EA606	48	48	96	10'-7"	1526	STR.						
EA607	24	24	48	5'-2"	372	2	1'-0"	2'-3"	2'-3"			
EA608	4 series of 6	–	4 series of 6	5'-2" TO 12'-3"	314	2	1'-0"	(*1)	(*1)			(*1) Vary from 2'-3" to 5'-9 1/2" @ 8 1/2"
EA609	24	24	48	2'-9"	198	5	0'-7"	0'-7"	0'-8 1/2"	0'-9"	0'-10"	
EA610	24	24	48	5'-4"	384	4	2'-3"	2'-5"	0'-7 1/2"			
EA611	24	24	48	2'-2"	156	3	1'-4"(*2)	1'-0"				(*2) Vertical Leg
EA612	34	34	68	3'-6"	357	STR.						
EA613	16	16	32	13'-5"	645	9	0'-7"	1'-4"	12'-0"			
EA614	–	48	48	10'-8"	769	STR.						
EA615	4 series of 6	4 series of 6	4 series of 6	5'-2" TO 13'-1"	329	2	1'-0"	(*3)	(*3)			(*3) Vary from 2'-3" to 6'-2 1/2" @ 9 1/2"
EA520	13	13	26	3'-0"	81	6	2'-5"					
EA521	10	10	20	2'-5"	50	STR.						
EA522	5	5	10	1'-5"	15	STR.						
EA523	5	5	10	2'-3"	23	5	8"	6"	8 1/2"	8 1/2"	0"	
EA524	9	9	18	4'-6"	84	STR.						
EA525	3	3	6	3'-9"	23	5	8"	6"	8 1/2"	2'-2 1/2"	0"	
EA526	6	6	12	6'-3"	78	2	1'-2"	2'-8"	2'-8"			
EA527	2	2	4	13'-8"	57	11						
EA528	6	6	12	13'-8"	171	STR.						

ABUTMENT TOTAL = 23,247 LBS.

SUPERSTRUCTURE

MARK	NO.	LENGTH	WEIGHT	TYPE	A	B	C	D	E	REMARKS
ES401	1176	30'-0"	23567	STR.						
ES402	224	33'-6"	5013	6	33'-0"					
ES403	168	15'-9"	1767	6	15'-3"					
ES404	972	19'-0"	12337	STR.						
ES405	168	16'-0"	1796	STR.						
ES406	156	13'-0"	1355	STR.						
ES407	392	30'-6"	7987	6	30'-0"					
ES501	2016	30'-0"	63081	STR.						
ES502	288	34'-10"	10463	STR.						
ES503	216	17'-2"	5569	STR.						
ES504	2976	25'-5"	78892	STR.						
ES505	1932	5'-9"	11587	7	0'-5"	2'-9"				
ES507	64	2'-8"	178	STR.						
ES508	32	4'-3"	142	STR.						
ES601	2976	25'-5"	113611	STR.						
ES602	1932	5'-4"	15476	4	2'-3"	2'-5"	0'-7 1/2"			
ES603	1932	2'-9"	7980	5	0'-7"	0'-7"	0'-8 1/2"	0'-9"	0'-10"	
ES604	1932	2'-2"	6287	3	1'-4"*	1'-0"				* VERTICAL LEG
SUPERSTRUCTURE TOTAL = 367,032 LBS.										

BENTS

MARK	NUMBER PER BENT	NUMBER TOTAL	LENGTH	WEIGHT	TYPE	A	B	C	D	E	REMARKS
(*1)ESB401	6	60	23'-0"	922	10						
(*2)ESB402	6	84	28'-0"	1571	10						
EB501	8	192	20'-9"	4155	STR						
EB502	48	1152	8'-5"	10112	2	3'-8"	2'-6"	2'-6"			
EB503	4	96	6'-5"	642	2	1'-8"	2'-6"	2'-6"			
EB504	12	288	10'-3"	3079	1	2'-0"	2'-8"				
EB601	18	432	21'-0"	13626	STR.						
(*1) EB1001	48	480	23'-0"	47505	STR.						(*1) BENTS 1 – 10
(*2) EB1002	48	672	28'-0"	80965	STR.						(*2) BENTS 11 – 24
BENT TOTAL = 162,577 LBS.											

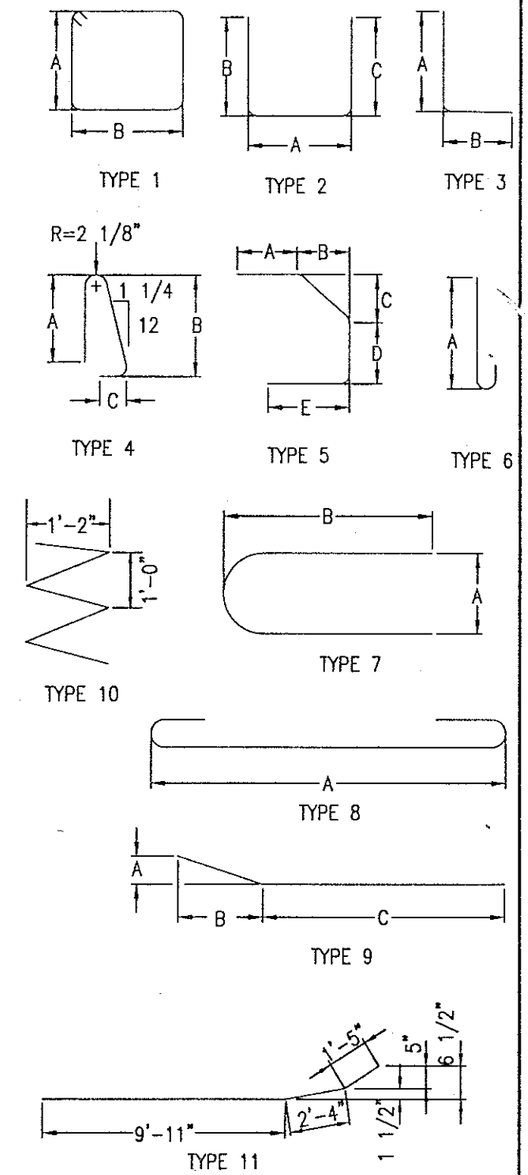

NOTE
BAR MARK STARTING WITH AN "E" REPRESENTS EPOXY COATED BARS.

EPOXY COATED REINFORCING STEEL SUPPORT:
IN ACCORDANCE WITH THE REQUIREMENTS OF SP509 AND 509.09, THE TOP AND BOTTOM MATS OF ALL LONGITUDINAL AND TRANSVERSE EPOXY COATED REINFORCING STEEL SHALL BE SUPPORTED BY APPROVED EPOXY COATED DEVICES W/SPACING NOT EXCEEDING 3'-0" ON CENTERS IN EACH DIRECTION. BROKEN CONCRETE, BRICKS, ETC. SHALL NOT BE USED FOR SUPPORT OF REINFORCING STEEL.

REINFORCING STEEL SAMPLES:
REFER TO O.T.C. GENERAL CONDITIONS G-6.02 AND CMS SECTION 700, 709.01 THROUGH 709.05 AND 709.08. SUFFICIENT ADDITIONAL REINFORCING STEEL SHALL BE PROVIDED FOR SAMPLING. RANDOM SAMPLES SHALL BE REPLACED IN THE STRUCTURES BY THE ADDITIONAL STEEL, SPLICED IN ACCORDANCE WITH 509.08.

NO.	REVISIONS	BY	DATE

OHIO TURNPIKE COMMISSION
REINFORCING STEEL LIST
OHIO TURNPIKE OVER TINKER'S CREEK
PLANS PREPARED BY:
BARR ENGINEERING, INC.

DESIGNED: ASB	CHECKED: GEA	DATE: 8-7-97
DRAWN: BYR	IN CHARGE: ASB	SCALE: N.T.S.

MP 185.6
16 / 16
CONTRACT 43-97-14 SHEET 124 OF 143

DESIGNED BY: ASB CHECKED BY: SMS DATE: 5-12-97 DATE: 8-7-97
DRAWN BY: BYR REVISED BY:
DATE: 6-21-97 DATE:
PLOTTED VIEW = PLAN XREF#1 = NONE XREF#2 = NONE
PLOT SCALE = 1=1 P-166 F:\OTC\PROJECTS\VEBAR.DWG MAY-20-1997

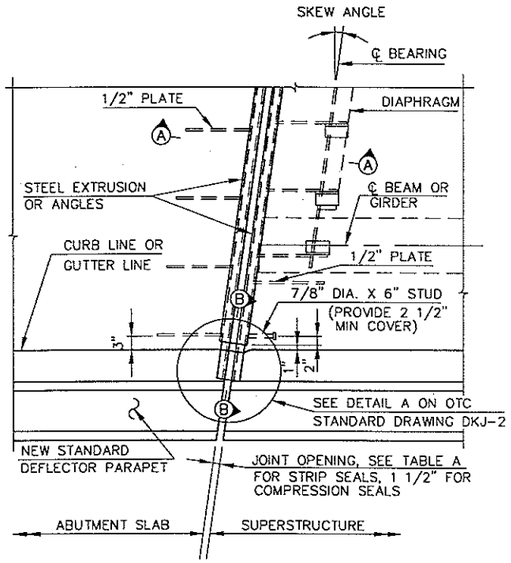

PLAN – SKEW ANGLE < 10°
(STRIP SEAL SHOWN, COMPRESSION SEAL SIMILAR)

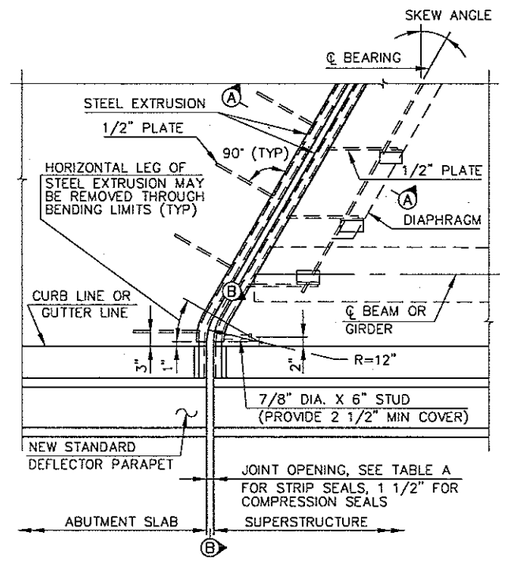

PLAN – SKEW ANGLE 10° TO 45°
(STRIP SEAL SHOWN, COMPRESSION SEAL SIMILAR)

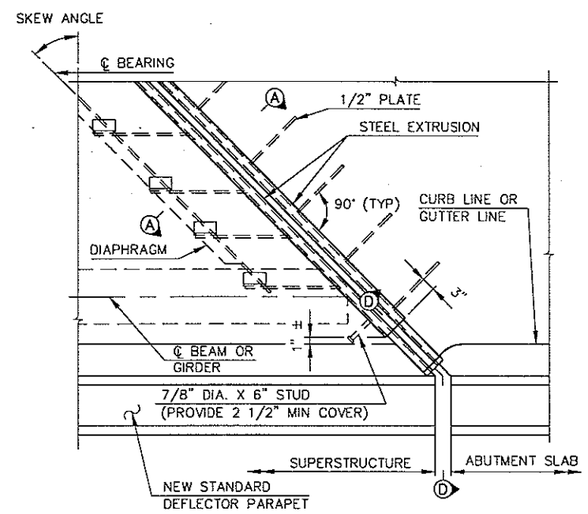

PLAN – SKEW ANGLE > 45° (STRIP SEAL ONLY)

NOTE: WHEN SKEW ANGLE IS GREATER THAN 45°, FURNISH JOINT ASSEMBLIES IN TWO SECTIONS AND PROVIDE A FIELD SPLICE AT THE CENTERLINE OF ROADWAY.

GENERAL NOTES

1. INSTALLATION OF SEAL: DURING INSTALLATION OF SUPPORT/ARMOR FOR THE SUPERSTRUCTURE SIDE OF THE JOINT SEAL, THE SEATING OF BEAMS ON BEARINGS SHALL BE CAREFULLY OBSERVED TO ASSURE THAT POSITIVE BEARING IS MAINTAINED. PROPER VERICAL FIT OF THE SUPPORT/ARMOR ON THE BEAMS SHALL BE ACHIEVED BY POSITIONING OF THE SUPPORT ANGLES RATHER THAN BY CLAMPING FORCE.
2. ELASTOMERIC COMPRESSION SEALS SHALL BE USED AT FIXED JOINTS ONLY, AND AT SKEWS LESS THAN 45°.
3. STUD ANCHORS SHALL BE LOW CARBON STEEL ASTM A-108.
4. THE MINIMUM LENGTH OF RETAINER SHALL BE 6'-0" BETWEEN JOINTS UNLESS OTHERWISE SHOWN.
5. JOINTS IN EXTRUSIONS SHALL HAVE WATERTIGHT, PARTIAL PENETRATION BUTT WELDS COMPLETELY AROUND THE OUTER PERIPHERY OF THE ABUTTING SURFACES. WELDS WHICH WILL BE IN CONTACT WITH THE SEAL AND/OR ANCHOR PLATES SHALL BE GROUND SMOOTH.
6. CONTRACTOR SHALL VERIFY ALL DIMENSIONS PRIOR TO FABRICATION.
7. ELASTOMERIC COMPRESSION SEALS SHALL BE WATSON-BOWMAN ACME WJ-200, D.S. BROWN C-V 2000, ERIE METAL SPECIALTIES BR200 OR APPROVED EQUAL.
8. CONTINUOUS STRIP SEALS SHALL BE AS MANUFACTURED BY WATSON-BOWMAN ACME, D.S. BROWN OR APPROVED EQUAL, AND SHALL BE THE SIZE AS SPECIFIED. SEE STRIP SEAL SELECTION TABLE.
9. DETAILS AT DIAPHRAGMS SHOWN, DETAILS AT BEAMS OR GIRDERS SIMILAR.
10. TRANSVERSE JOINTS IN COMPRESSION SEAL ARMOR AND VERTICAL LEGS OF EXTRUSIONS SHALL HAVE COMPLETE PENETRATION BUTT WELDS. WELDS WHICH WILL BE IN CONTACT WITH SEALS SHALL BE GROUND FLUSH.
11. ARMOR STEEL COATING: FINISHED STEEL ASSEMBLY SHALL BE METALIZED, SEE SPECIAL PROVISIONS.

NOTE

FOR SECTIONS B-B & D-D AND DETAIL A, SEE OTC STANDARD DRAWING DKJ-2.

TABLE A

STRIP SEAL SIZE	STRIP SEAL JOINT OPENING						
	TEMPERATURE °F						
	30	40	50	60	70	80	90
3"	2 1/4"	2 1/8"	2"	1 7/8"	1 3/4"	1 5/8"	1 1/2"
4"	2 5/8"	2 1/2"	2 1/2"	2 3/8"	2 1/4"	2 1/8"	2"
5"	2 7/8"	2 3/4"	2 3/4"	2 5/8"	2 5/8"	2 1/2"	2 3/8"

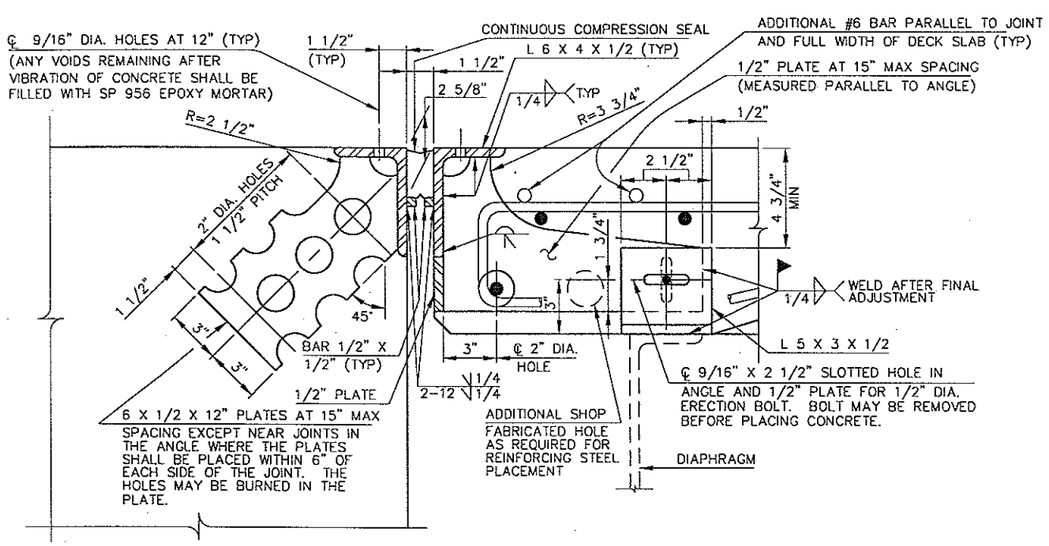

SECTION A-A (COMPRESSION SEAL)

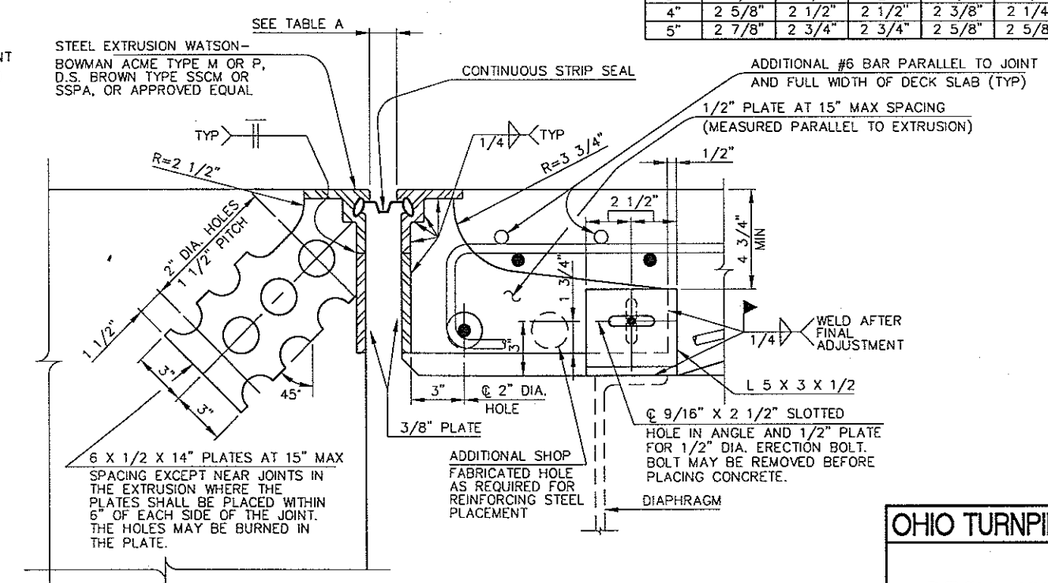

SECTION A-A (STRIP SEAL)
WATSON-BOWMAN ACME TYPE M, OR D.S. BROWN TYPE SSCM EXTRUSIONS SHOWN.

DESIGNED BY:	CHECKED BY:		
DATE:	DATE:		
DRAWN BY: KNH	REVISED BY: T.K.I.		
DATE: 9/95	DATE: 6/25/97		
CAD FILE NAME: K:\OTC3L.STD\DJ-1			

OHIO TURNPIKE COMMISSION

DECK JOINT DETAILS
CELLULAR ABUTMENTS

DATE: JUNE 25, 1997 | SCALE: N.T.S.

O.T.C. STANDARD DRAWING DJ-1

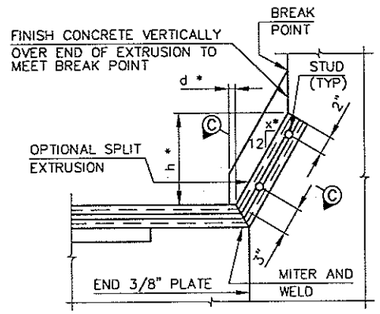

SECTION B-B (STRIP SEAL)

* SEE TABLE B FOR VALUE

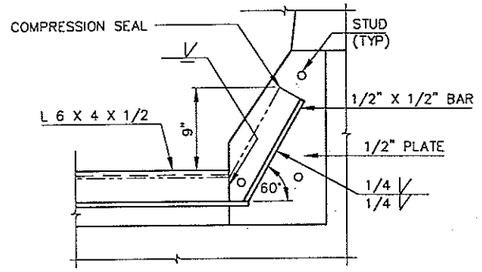

SECTION B-B (COMPRESSION SEAL)

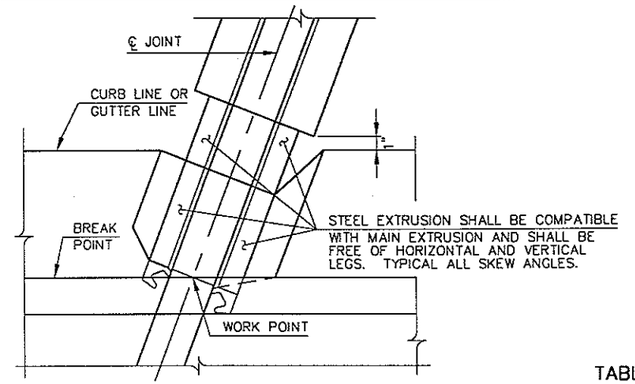

DETAIL A

NOTE: FOR JOINT DETAILS IN SIDEWALK SEE OTC STANDARD DRAWING DKJ-3

NOTES

1. THE SPLIT EXTRUSION SHOWN IS A NORMAL EXTRUSION WHICH HAS BEEN MODIFIED. AT JOINT UPTURNS, ESPECIALLY ON SKEWED BRIDGE DECKS, THE USE OF SPLIT EXTRUSIONS MAY BE NECESSARY TO ENSURE GOOD SEAL INSTALLATION. ON SHOP DRAWINGS, WHERE THE SPLIT EXTRUSION IS NOT USED, THE SEAL MANUFACTURER OR HIS AGENT WARRANTS TO THE CHIEF ENGINEER THAT THE FURNISHED CONFIGURATION WILL PROVIDE FOR READY INSTALLATION AND REPLACEMENT OF THE SEAL.

2. SECTION F-F & G-G – THE BENT STEEL PLATES SHALL BE A-36 STEEL, GALVANIZED IN ACCORDANCE WITH ITEM 711.02.

   SHOP DRAWINGS SHALL BE SUBMITTED PER CMS 501.05.

   BASIS OF PAYMENT: THE UNIT PRICE SHALL INCLUDE ALL MATERIAL, LABOR, EQUIPMENT AND INCIDENTALS TO FURNISH AND INSTALL THE BENT PLATES. PAYMENT WILL BE MADE AT THE UNIT PRICE BID PER POUND FOR ITEM 513, PARAPET PLATES, AS PER PLAN.

TABLE B

	SKEW ANGLE	
	<10°	10° – 45°
d	3/4" MIN	3/4"
x	6 15/16"	7 1/2"
h	10"	10"

STRIP SEAL SELECTION TABLE

SEAL MOVEMENT RATING (SIZE)	MANUFACTURER & DESIGNATION *	
	THE D.S. BROWN COMPANY	WATSON-BOWMAN & ACME CORP.
3"	300L	SE-300
4"	400L	SE-400
5"	500L	SE-500

* OR APPROVED EQUAL

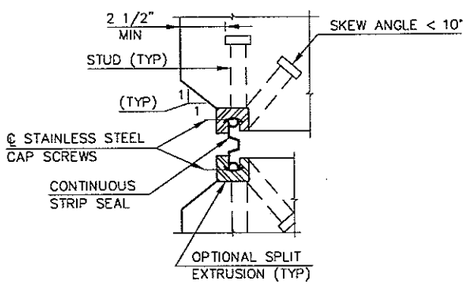

SECTION C-C

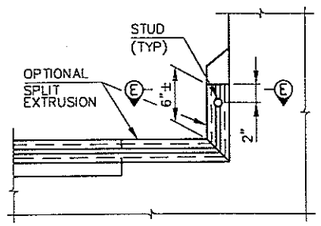

SECTION D-D

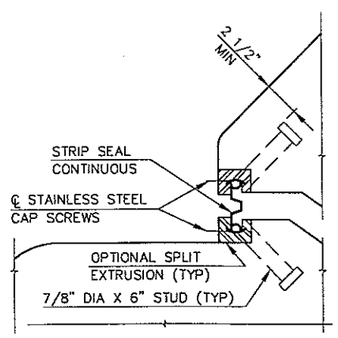

SECTION E-E

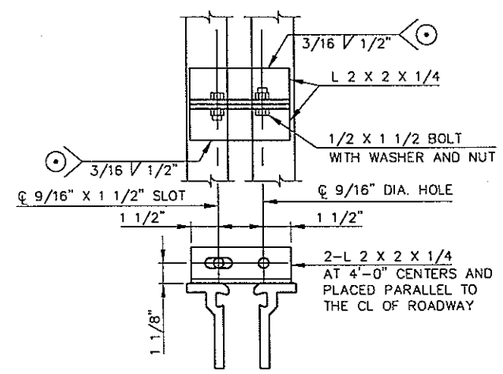

DETAIL – ALIGNMENT BRACKET

⊙ TEMPORARY WELD TO BE REMOVED AND GROUND SMOOTH IN FIELD. LOOSEN TEMPORARY JOINT ARMOR AFTER INITIAL SET OF CONCRETE, PREFERABLY NOT LATER THAN TWO HOURS AFTER CONCLUSION OF CONCRETE PLACEMENT.

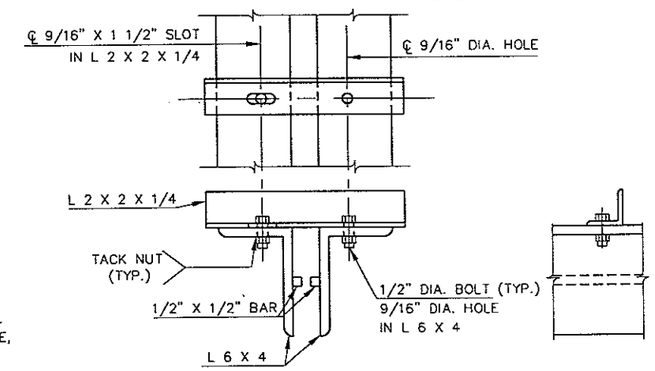

DETAIL – ALIGNMENT BRACKET

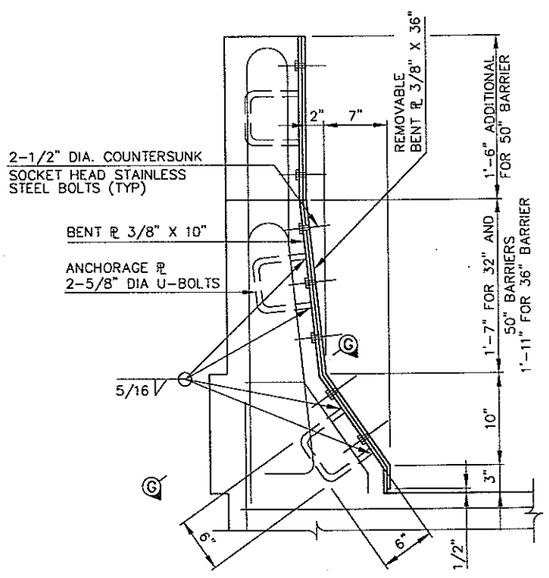

SECTION F-F

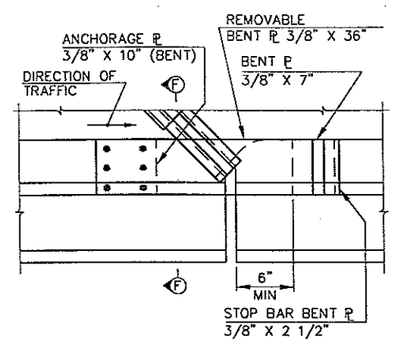

PLAN – SKEWS > 45°

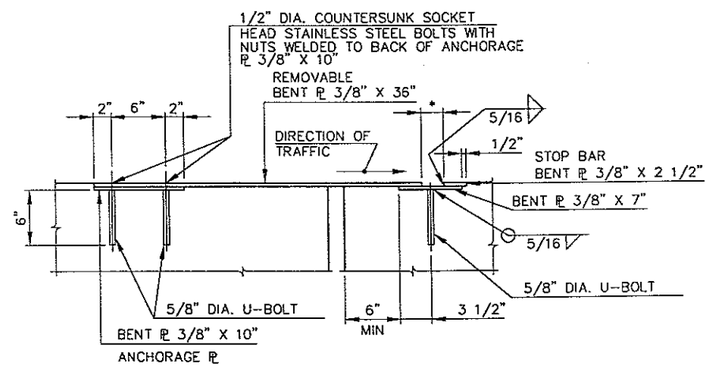

SECTION G-G

* DIMENSION SET EQUAL TO STRIP SEAL JOINT OPENING AT TIME OF INSTALLATION

DESIGNED BY:		CHECKED BY:	
DATE:		DATE:	
DRAWN BY: KMH		REVISED BY: T.K.L.	
DATE: 9/95		DATE: 6/25/97	
CAD FILE NAME: K:\OTCSL\STD\DJ-2			

OHIO TURNPIKE COMMISSION

DECK JOINT DETAILS

DATE: JUNE 25, 1997 | SCALE: N.T.S.

O.T.C. STANDARD DRAWING DJ-2

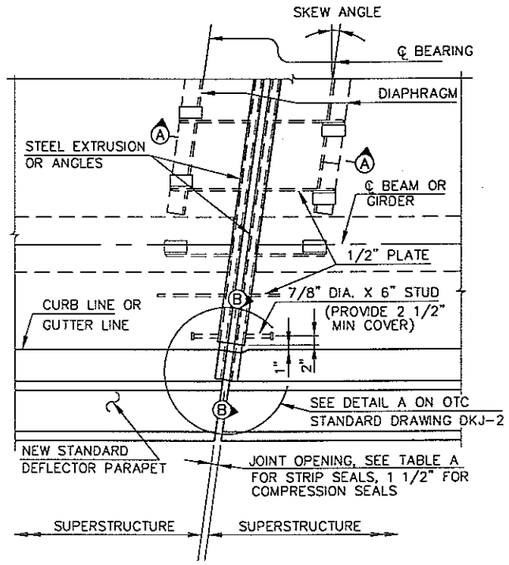

PLAN – SKEW ANGLE < 10°
(STRIP SEAL SHOWN, COMPRESSION SEAL SIMILAR)

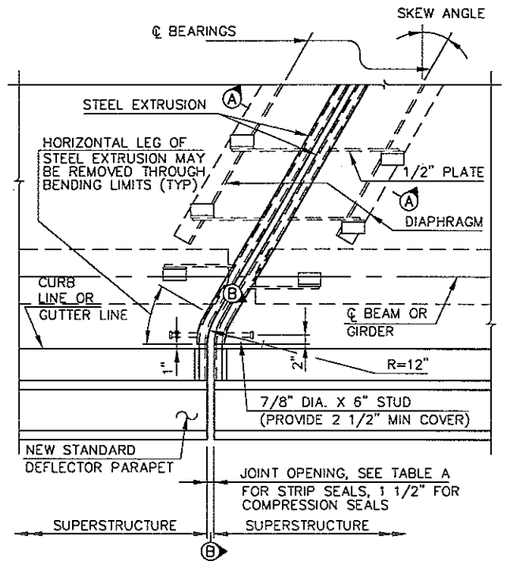

PLAN – SKEW ANGLE 10° TO 45°
(STRIP SEAL SHOWN, COMPRESSION SEAL SIMILAR)

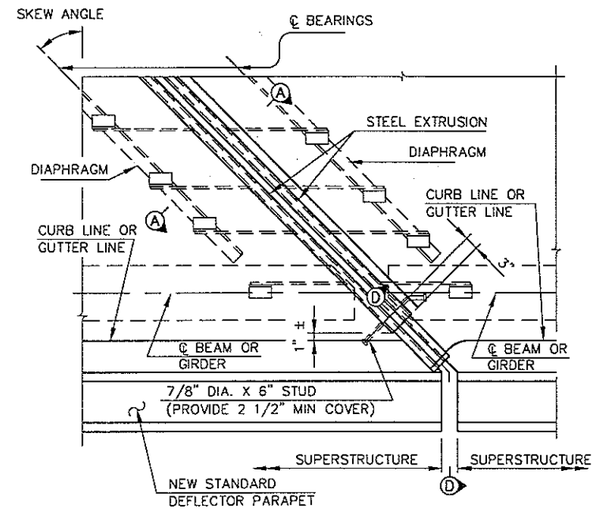

PLAN – SKEW ANGLE > 45° (STRIP SEAL ONLY)

NOTE: WHEN SKEW ANGLE IS GREATER THAN 45°, FURNISH JOINT ASSEMBLIES IN TWO SECTIONS AND PROVIDE A FIELD SPLICE AT THE CENTERLINE OF ROADWAY.

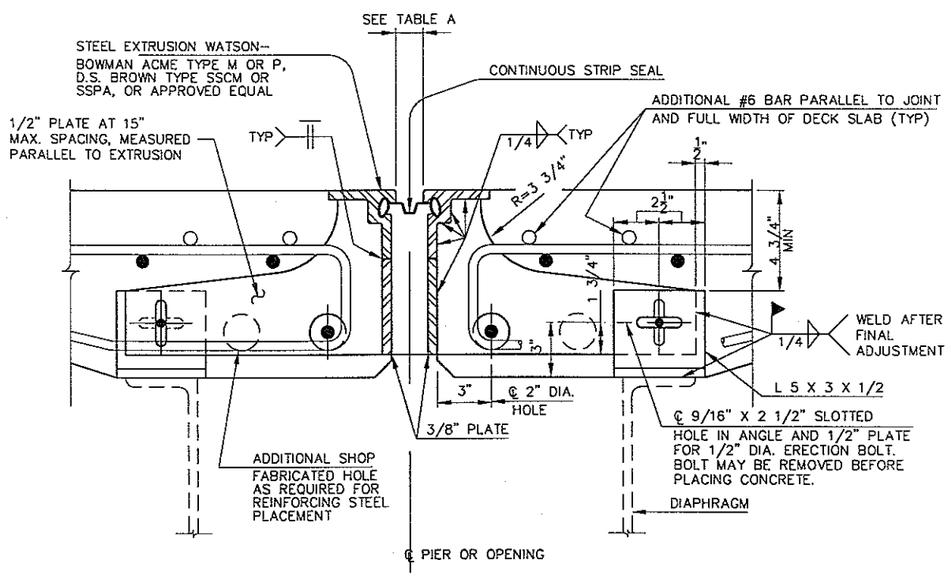

SECTION A–A (STRIP SEAL)
WATSON–BOWMAN ACME TYPE M,
D.S. BROWN TYPE SSCM EXTRUSIONS SHOWN.

TABLE A

STRIP SEAL SIZE	STRIP SEAL JOINT OPENING						
	TEMPERATURE °F						
	30	40	50	60	70	80	90
3"	2 1/4"	2 1/8"	2"	1 7/8"	1 3/4"	1 5/8"	1 1/2"
4"	2 5/8"	2 1/2"	2 1/2"	2 3/8"	2 1/4"	2 1/8"	2"
5"	2 7/8"	2 3/4"	2 3/4"	2 5/8"	2 5/8"	2 1/2"	2 3/8"

GENERAL NOTES

1. INSTALLATION OF SEAL: DURING INSTALLATION OF SUPPORT/ARMOR FOR THE JOINT SEAL, THE SEATING OF BEAMS ON BEARINGS SHALL BE CAREFULLY OBSERVED TO ASSURE THAT POSITIVE BEARING IS MAINTAINED. PROPER VERTICAL FIT OF THE SUPPORT/ARMOR ON THE BEAMS SHALL BE ACHIEVED BY POSITIONING OF THE SUPPORT ANGLES RATHER THAN BY CLAMPING FORCE.
2. ELASTOMERIC COMPRESSION SEALS SHALL BE USED AT FIXED JOINTS ONLY, AND AT SKEWS LESS THAN 45°.
3. STUD ANCHORS SHALL BE LOW CARBON STEEL ASTM A–108.
4. THE MINIMUM LENGTH OF RETAINER SHALL BE 6'–0" BETWEEN JOINTS UNLESS OTHERWISE SHOWN.
5. JOINTS IN EXTRUSIONS SHALL HAVE WATERTIGHT, PARTIAL PENETRATION BUTT WELDS COMPLETELY AROUND THE OUTER PERIPHERY OF THE ABUTTING SURFACES. WELDS WHICH WILL BE IN CONTACT WITH THE SEAL AND/OR ANCHOR PLATES SHALL BE GROUND SMOOTH.
6. CONTRACTOR SHALL VERIFY ALL DIMENSIONS PRIOR TO FABRICATION.
7. ELASTOMERIC COMPRESSION SEALS SHALL BE WATSON–BOWMAN ACME WJ–200, D.S. BROWN C–V 2000, ERIE METAL SPECIALTIES BR200 OR APPROVED EQUAL.
8. CONTINUOUS STRIP SEALS SHALL BE AS MANUFACTURED BY WATSON–BOWMAN ACME, D.S. BROWN OR APPROVED EQUAL, AND SHALL BE THE SIZE AS SPECIFIED. SEE STRIP SEAL SELECTION TABLE.
9. DETAILS AT DIAPHRAGMS SHOWN, DETAILS AT BEAMS OR GIRDERS SIMILAR.
10. TRANSVERSE JOINTS IN COMPRESSION SEAL ARMOR AND VERTICAL LEGS OF EXTRUSIONS SHALL HAVE COMPLETE PENETRATION BUTT WELDS. WELDS WHICH WILL BE IN CONTACT WITH SEALS SHALL BE GROUND FLUSH.
11. STEEL ARMOR COATING: FINISHED STEEL ASSEMBLY SHALL BE METALIZED, SEE SPECIAL PROVISIONS.

NOTE

FOR SECTIONS B–B & D–D AND DETAIL A, SEE OTC STANDARD DRAWING DKJ–2.

DESIGNED BY:	CHECKED BY:
DATE:	DATE:
DRAWN BY: ALH	REVISED BY: T.K.I.
DATE: 10/16/96	DATE: 6/25/97
CAD FILE NAME: K:\OTC3L.STD\DJ-5	

OHIO TURNPIKE COMMISSION

DECK JOINT DETAILS AT PIERS

DATE: JUNE 25, 1997 | SCALE: N.T.S.

O.T.C. STANDARD DRAWING DJ–5

BEAM SPLICE DETAILS

BEAM	FLANGE PLATES TYPE	FLANGE PLATES OUTSIDE 2 REQ'D	FLANGE PLATES INSIDE 4 REQ'D	FLANGE BOLTS NUM.	FLANGE BOLTS N SPA.	FLANGE BOLTS PITCH	FLANGE BOLTS A	FLANGE BOLTS B	FLANGE BOLTS C	WEB SPLICE TYPE	WEB SPLICE WEB PLATES 2 REQ'D	WEB SPLICE WEB BOLTS No.	WEIGHT OF SPLICE MAT'RL lbs. *
W40X268	B	17½x⅝x4'-2"	7x⅝x4'-2"	64	7	3½	2 5/16	3	7⅛	B	33¼x⅜x20	60	960
W40X249	B	15½x⅝x4'-2"	6x⅝x4'-2"	64	7	3½	2 5/16	2	7⅛	B	33¼x⅜x20	60	890
W40X244	B	17½x⅜x4'-2"	7x⅜x4'-2"	64	7	3½	2 5/16	3	7⅛	B	33¼x⅜x20	60	910
W40X221	B	17½x½x3'-2"	7x½x3'-2"	48	5	3½	2 5/16	3	7⅛	B	33¼x⅜x20	60	720
W40X215	B	15½x⅜x4'-2"	6x⅜x4'-2"	64	7	3½	2 5/16	2	7⅛	B	33¼x½x20	60	820
W40X199	B	15½x½x3'-2"	6x½x3'-2"	48	5	3½	2 5/16	2	7⅛	B	33¼x½x20	60	650
W40X192	B	17½x⅜x3'-2"	7x⅜x3'-2"	48	5	3½	2 5/16	3	7⅛	B	33¼x⅜x20	60	630
W40X183	A	11½x⅜x2'-8"	4x⅜x2'-8"	40	4	3½	2 5/16	-	7⅛	B	33¼x½x20	60	560
W40X167	A	11½x½x2'-2"	4x½x2'-2"	32	3	3½	2 5/16	-	7⅛	B	33¼x½x20	60	470
W40X149	A	11½x7/16x2'-2"	4x7/16x2'-2"	32	3	3½	2⅞	-	7	B	33¼x½x20	60	460
W36X300	B	16x¾x6'-3½"	6½x¾x6'-3½"	80	9	3¾	2 5/16	2½	7	C	31x9/16x26	80	1510
W36X280	B	16x11/16x5'-½"	6½x11/16x5'-½"	64	7	3¾	2 5/16	2½	7	B	31x11/16x20	60	1120
W36X260	B	16x⅝x5'-½"	6½x⅝x5'-½"	64	7	3¾	2¼	2½	7	B	31x11/16x20	60	1060
W36X245	B	16x9/16x5'-½"	6½x9/16x5'-½"	64	7	3¾	2 5/16	2½	6⅞	B	31x⅝x20	60	970
W36X230	B	16x7/16x5'-½"	6½x7/16x5'-½"	64	7	3¾	2 5/16	2½	6⅞	B	31x⅝x20	60	940
W36X210	A	12x⅝x3'-0"	4½x⅝x3'-0"	40	4	3½	2 5/16	-	7	B	31x11/16x20	60	670
W36X194	A	12x9/16x3'-0"	4½x9/16x3'-0"	40	4	3½	2⅝	-	6⅞	B	31x⅝x20	60	620
W36X182	A	12x7/16x3'-0"	4½x7/16x3'-0"	40	4	3½	2⅝	-	6⅞	B	31x⅝x20	60	600
W36X170	A	12x½x2'-5"	4½x½x2'-5"	32	3	3½	2 5/16	-	6⅞	B	31x9/16x20	60	510
W36X160	A	12x½x2'-5"	4½x½x2'-5"	32	3	3½	2⅝	-	6¾	B	31x9/16x20	60	500
W36X150	A	11¾x7/16x2'-5"	4½x7/16x2'-5"	32	3	3½	2⅝	-	6¾	A	31x½x14	40	380
W36X135	A	11¾x7/16x1'-10"	4½x7/16x1'-10"	24	2	3½	2 5/16	-	6¾	A	31x7/16x14	40	310
W33X263	B	15½x11/16x4'-9"	6½x11/16x4'-9"	64	7	3½	2 5/16	2½	6¾	C	28x9/16x26	72	1150
W33X241	B	15½x⅝x4'-9"	6½x⅝x4'-9"	64	7	3½	2¼	2½	6¾	C	28x9/16x26	72	1090
W33X221	B	15½x9/16x4'-9"	6½x9/16x4'-9"	64	7	3½	2 5/16	2½	6¾	B	28x11/16x20	54	890
W33X201	B	15½x½x3'-7"	6½x½x3'-7"	48	5	3½	2¼	2½	6¼	B	28x⅝x20	54	680
W33X169	A	11x9/16x3'-0"	4½x9/16x3'-0"	40	4	3½	2⅝	-	6¾	B	28x⅝x20	54	570
W33X152	A	11x½x2'-5"	4½x½x2'-5"	32	3	3½	2 5/16	-	6¾	B	28x9/16x20	54	460
W33X141	A	11x7/16x2'-5"	4½x7/16x2'-5"	32	3	3½	2 1/16	-	6⅝	B	28x9/16x20	54	460
W33X130	A	11x7/16x1'-10"	4½x7/16x1'-10"	24	2	3½	2 5/16	-	6⅝	A	28x½x14	36	300
W33X118	A	11x⅜x1'-10"	4½x⅜x1'-10"	24	2	3½	2 1/16	-	6⅝	A	28x7/16x14	36	280
W30X211	B	15x9/16x5'-½"	6x9/16x5'-½"	64	7	3½	2 1/16	2	6¼	B	25x½x20	48	910
W30X191	A	15x½x3'-7"	6x½x3'-7"	48	5	3½	3 1/16	-	8⅛	B	25x7/16x20	48	670
W30X173	A	14¾x½x3'-0"	6x½x3'-0"	40	4	3½	3 1/16	-	8⅛	B	25x⅜x20	48	570
W30X148	A	10x¾x2'-5"	4x¾x2'-5"	32	3	3½	2¼	-	6	B	25x⅝x20	48	460
W30X132	A	10x½x2'-5"	4x½x2'-5"	32	3	3½	2 5/16	-	6⅛	B	25x9/16x20	48	420
W30X124	A	10x7/16x1'-10"	4x7/16x1'-10"	24	2	3½	2¼	-	6	B	25x9/16x20	48	370
W30X116	A	10x7/16x1'-10"	4x7/16x1'-10"	24	2	3½	2¼	-	6	A	25x½x14	32	280
W30X108	A	10x⅜x1'-10"	4x⅜x1'-10"	24	2	3½	2¼	-	6	A	25x7/16x14	32	260
W30X99	A	10x⅜x1'-10"	4x⅜x1'-10"	24	2	3½	2¼	-	6	A	25x7/16x14	32	260
W30X90	A	10x⅜x1'-10"	4x⅜x1'-10"	24	2	3½	2 5/16	-	6	A	25x7/16x14	32	260
W27X194	A	14x¾x3'-7"	5½x¾x3'-7"	48	5	3½	3¼	-	7½	C	22x9/16x26	56	770
W27X178	A	14x½x3'-7"	5½x½x3'-7"	48	5	3½	3¼	-	7⅜	B	22x⅝x20	42	630
W27X161	A	14x½x3'-0"	5½x½x3'-0"	40	4	3½	3¼	-	7½	B	22x11/16x20	42	540
W27X146	A	13¾x7/16x3'-0"	5½x7/16x3'-0"	40	4	3½	3¼	-	7½	B	22x⅝x20	42	500
W27X129	A	10x½x2'-5"	4x½x2'-5"	32	3	3½	2 1/16	-	5⅞	B	22x⅝x20	42	410
W27X114	A	10x7/16x1'-10"	4x7/16x1'-10"	24	2	3½	2 1/16	-	5⅞	B	22x9/16x20	42	330
W27X102	A	10x⅜x1'-10"	4x⅜x1'-10"	24	2	3½	2 1/16	-	5⅞	A	22x½x14	28	250
W27X94	A	9¾x⅜x1'-10"	4x⅜x1'-10"	24	2	3½	2 1/16	-	5⅞	A	22x7/16x14	28	240
W27X84	A	9¾x⅜x1'-10"	4x⅜x1'-10"	24	2	3½	2 1/16	-	5⅞	A	22x7/16x14	28	240
W24X162	A	12½x9/16x3'-0"	5x9/16x3'-0"	40	4	3½	2 9/16	-	7⅛	C	19x7/16x26	48	620
W24X146	A	12½x½x3'-0"	5x½x3'-0"	40	4	3½	2⅞	-	7⅛	B	19x¾x20	36	490

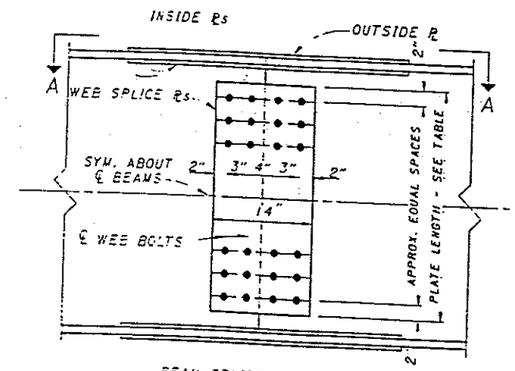

BEAM SPLICE DETAIL
WEB SPLICE - TYPE A

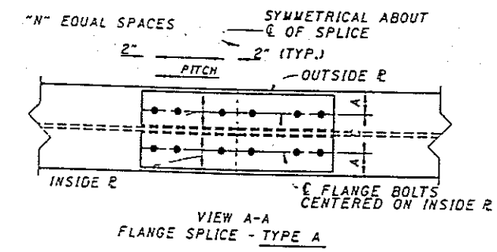

VIEW A-A
FLANGE SPLICE - TYPE A

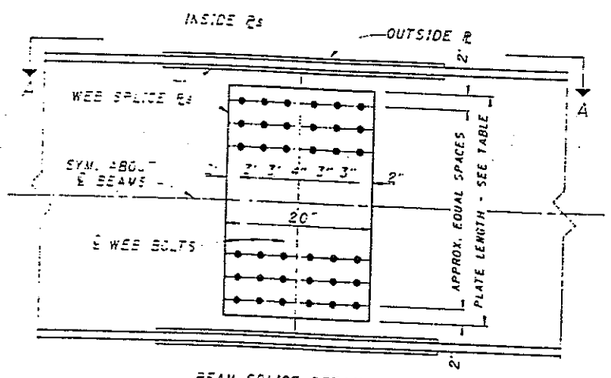

BEAM SPLICE DETAIL
WEB SPLICE - TYPE B

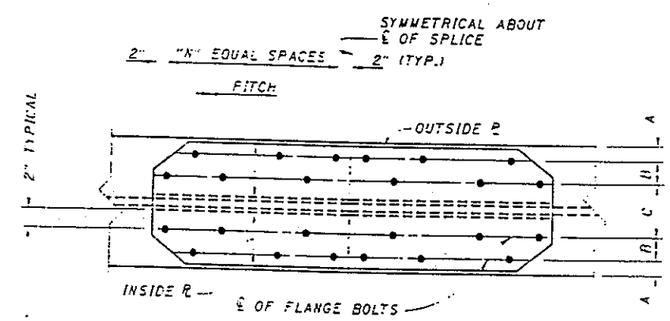

VIEW A-A
FLANGE SPLICE - TYPE B

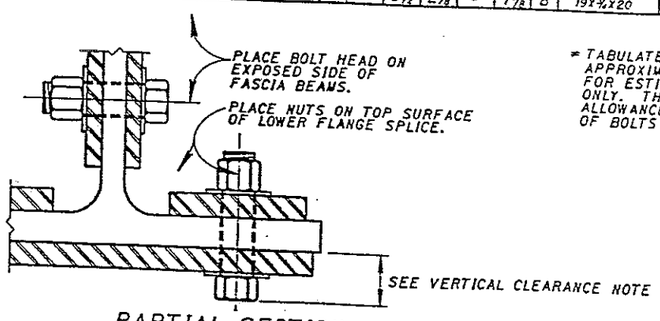

PARTIAL SECTION
(AT ℄ OF BEAM SPLICE)

* TABULATED WEIGHTS ARE APPROXIMATE AND ARE FOR ESTIMATING PURPOSES ONLY. THEY INCLUDE AN ALLOWANCE FOR WEIGHT OF BOLTS AND WASHERS.

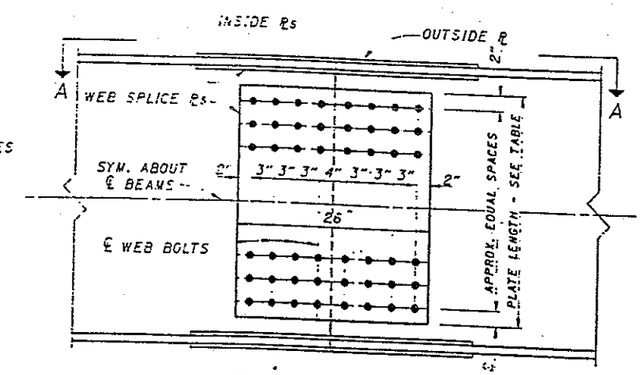

BEAM SPLICE DETAIL
WEB SPLICE - TYPE C

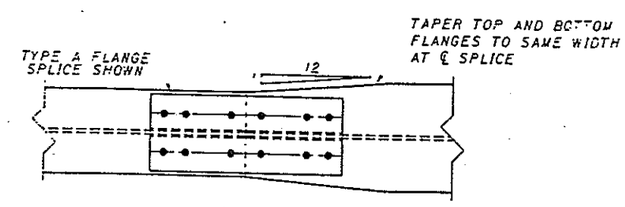

VIEW A-A
SPLICE DETAIL FOR BEAMS HAVING DIFFERENT FLANGE WIDTHS

NOTE: ALL SHAPES AND PLATES SHALL BE DESIGNATED (CVN), AND SHALL MEET SPECIFIED MINIMUM NOTCH TOUGHNESS REQUIREMENTS AS SPECIFIED IN 711.01 OF CMS.

NOTE: ALL FASTENERS ARE 1" DIAMETER HIGH STRENGTH BOLTS. ASTM A-325

DESIGN AGENCY
BUREAU OF BRIDGES AND STRUCTURAL DESIGN

STATE OF OHIO DEPARTMENT OF TRANSPORTATION
ENGINEER OF BRIDGES
DATE

REVISIONS | REVIEWED | CHECKED SAM | DESIGNED GLA | DRAWN SAM

BS-1-93

STANDARD
BOLTED BEAM SPLICE
FOR STEEL BEAM BRIDGES
(FOR 36 KSI STEEL)

BEAM SPLICE DETAILS

BEAM	FLANGE PLATES TYPE	FLANGE PLATES OUTSIDE 2 REQ'D	FLANGE PLATES INSIDE 4 REQ'D	FLANGE BOLTS NUM.	FLANGE BOLTS # SPA.	FLANGE BOLTS PITCH	FLANGE BOLTS A	FLANGE BOLTS B	FLANGE BOLTS C	WEB SPLICE TYPE	WEB SPLICE WEB PLATES 2 REQ'D	WEB SPLICE WEB BOLTS No.	WEIGHT OF SPLICE MAT'RL lbs. *
W40X268	B	17½x⅝x5'-11"	7x⅝x5'-11"	80	9	3½	2 5/16	3	7 1/8	C	33x 7/16x28¼	72	1390
W40X249	B	15½x⅝x4'-9"	6x⅝x4'-9"	64	7	3½	2 5/16	2	7 1/8	C	33x 7/16x28¼	72	1130
W40X244	B	17½x⅝x4'-9"	7x⅝x4'-9"	64	7	3½	2 5/16	3	7 1/8	C	33x 7/16x28¼	72	1150
W40X221	B	17½x½x4'-9"	7x½x4'-9"	64	7	3½	2 5/16	3	7 1/8	C	33x 7/16x28¼	72	1080
W40X215	B	15½x⅝x4'-9"	6x⅝x4'-9"	64	7	3½	2 5/16	2	7 1/8	C	33x⅝x28¼	72	1040
W40X199	B	15½x½x3'-7"	6x½x3'-7"	48	5	3½	2 5/16	2	7 1/8	C	33x⅝x28¼	72	850
W40X192	B	17½x⅝x3'-7"	7x⅝x3'-7"	48	5	3½	2 5/16	3	7 1/8	C	33x 7/16x28¼	72	840
W40X183	A	11½x⅝x3'-0"	4x⅝x3'-0"	40	4	3½	2 5/16	-	7 1/8	B	33x 5/16x21½	54	620
W40X167	A	11½x½x3'-0"	4x½x3'-0"	40	4	3½	2 5/16	-	7 1/8	B	33x 5/16x21½	54	570
W40X149	A	11½x 7/16x2'-5"	4x 7/16x2'-5"	32	3	3½	2 3/8	-	7	B	33x 5/16x21½	54	500
W36X300	B	16x¾x6'-3½"	6½x⅝x6'-3½"	80	9	3¾	2 5/16	2½	7	C	31x 7/16x28¼	72	1600
W36X280	B	16x¾x6'-3½"	6½x⅝x6'-3½"	80	9	3¾	2 5/16	2½	7	C	31x 7/16x28¼	72	1480
W36X260	B	16x⅝x6'-3½"	6½x⅝x6'-3½"	80	9	3¾	2¼	2½	7	C	31x⅝x28¼	72	1380
W36X256	A	12x 9/16x4'-2"	4½x 9/16x4'-2"	56	6	3½	2 5/16	-	7 1/8	C	31x 7/16x28¼	72	1090
W36X245	B	16x⅝x5'-½"	6½x⅝x5'-½"	64	7	3¾	2 5/16	2½	6 1/8	C	31x⅝x28¼	72	1170
W36X232	A	12x 9/16x4'-2"	4½x 7/16x4'-2"	56	6	3½	2 5/16	-	7	C	31x 15/16x28¼	72	1010
W36X230	B	16x⅝x5'-½"	6½x⅝x5'-½"	64	7	3¾	2 5/16	2½	6 1/8	C	31x 7/16x28¼	72	1100
W36X210	A	12x⅝x3'-7"	4½x⅝x3'-7"	48	5	3½	2 5/16	-	7	C	31x⅝x28¼	72	910
W36X194	A	12x⅝x3'-0"	4½x⅝x3'-0"	40	4	3½	2⅝	-	6 7/8	C	31x⅝x28¼	72	780
W36X182	A	12x 9/16x3'-0"	4½x 9/16x3'-0"	40	4	3½	2⅝	-	6 7/8	C	31x 7/16x28¼	72	740
W36X170	A	12x½x3'-0"	4½x½x3'-0"	40	4	3½	2 5/16	-	6 7/8	B	31x 5/16x21½	54	570
W36X160	A	12x½x2'-5"	4½x½x2'-5"	32	3	3½	2⅝	-	6¾	B	31x 5/16x21½	54	510
W36X150	A	11⅞x½x2'-5"	4½x½x2'-5"	32	3	3½	2⅝	-	6¾	B	31x 5/16x21½	54	510
W36X135	A	11⅞x 7/16x2'-5"	4½x 7/16x2'-5"	32	3	3½	2⅝	-	6¾	B	31x½x21½	54	460
W33X263	B	15½x 9/16x5'-11"	6½x 9/16x5'-11"	80	9	3½	2 5/16	2½	6 5/8	C	29⅝x 9/16x28¼	64	1350
W33X241	B	15½x⅝x4'-9"	6½x⅝x4'-9"	64	7	3½	2¼	2½	6 5/8	C	29⅝x⅝x28¼	64	1100
W33X221	B	15½x 9/16x4'-9"	6½x 9/16x4'-9"	64	7	3½	2 5/16	2½	6 5/8	C	29⅝x 9/16x28¼	64	1010
W33X201	B	15½x½x4'-9"	6½x½x4'-9"	64	7	3½	2¼	2½	6¼	C	29⅝x 7/16x28¼	64	980
W33X169	A	11x⅝x3'-0"	4½x⅝x3'-0"	40	4	3½	2⅝	-	6¾	B	29⅝x⅝x21½	48	570
W33X152	A	11x½x2'-5"	4½x½x2'-5"	32	3	3½	2 1/16	-	6¾	B	29⅝x½x21½	48	470
W33X141	A	11x½x2'-5"	4½x½x2'-5"	32	3	3½	2 1/16	-	6 5/8	B	29⅝x½x21½	48	460
W33X130	A	11x 7/16x2'-5"	4½x 7/16x2'-5"	32	3	3½	2 1/16	-	6 5/8	B	29⅝x½x21½	48	440
W33X118	A	11x⅜x1'-10"	4½x⅜x1'-10"	24	2	3½	2 1/16	-	6 5/8	B	29⅝x½x21½	48	380
W30X211	B	15x⅝x4'-9"	6x⅝x4'-9"	64	7	3½	2 1/16	2	6¼	C	26½x⅝x28¼	56	990
W30X191	B	15x½x3'-7"	6x½x3'-7"	48	5	3½	2 1/16	2	6 1/8	C	26½x⅝x28¼	56	730
W30X173	B	14⅞x½x3'-7"	6x½x3'-7"	48	5	3½	2 1/16	2	6 1/8	C	26½x 9/16x28¼	56	780
W30X148	A	10x⅝x2'-5"	4x⅝x2'-5"	32	3	3½	2¼	-	6	B	26½x 9/16x21½	42	460
W30X132	A	10x½x2'-5"	4x½x2'-5"	32	3	3½	2 5/16	-	6 1/8	B	26½x½x21½	42	420
W30X124	A	10x 7/16x2'-5"	4x 7/16x2'-5"	32	3	3½	2¼	-	6	B	26½x½x21½	42	410
W30X116	A	10x 7/16x1'-10"	4x 7/16x1'-10"	24	2	3½	2¼	-	6	B	26½x½x21½	42	360
W30X108	A	10x⅜x1'-10"	4x⅜x1'-10"	24	2	3½	2¼	-	6	B	26½x½x21½	42	350
W30X99	A	10x⅜x1'-10"	4x⅜x1'-10"	24	2	3½	2¼	-	6	B	26½x 11/16x21½	42	330
W30X90	A	10x⅜x1'-10"	4x⅜x1'-10"	24	2	3½	2 5/16	-	6	A	26½x⅞x14¾	28	350
W27X194	A	14x⅝x4'-2"	5½x 9/16x4'-2"	56	6	3½	3¼	-	7½	C	24x⅝x28¼	48	850
W27X178	A	14x⅝x3'-7"	5½x 9/16x3'-7"	48	5	3½	3¼	-	7 5/8	C	24x 9/16x28¼	48	730
W27X161	A	14x½x3'-0"	5½x½x3'-0"	40	4	3½	3¼	-	7½	C	24x⅝x28¼	48	630
W27X146	A	13⅞x 7/16x3'-0"	5½x 7/16x3'-0"	40	4	3½	3¼	-	7½	B	24x½x21½	36	490
W27X129	A	10x½x2'-5"	4x½x2'-5"	32	3	3½	2 1/16	-	5⅞	B	24x½x21½	36	400
W27X114	A	10x½x1'-10"	4x½x1'-10"	24	2	3½	2⅛	-	5⅞	B	24x½x21½	36	340
W27X102	A	10x⅜x1'-10"	4x⅜x1'-10"	24	2	3½	2 1/16	-	5⅞	B	24x½x21½	36	310
W27X94	A	9⅞x⅜x1'-10"	4x⅜x1'-10"	24	2	3½	2 1/16	-	5⅞	B	24x½x21½	36	300
W27X84	A	9⅞x⅜x1'-10"	4x⅜x1'-10"	24	2	3½	2 1/16	-	5⅞	A	24x⅜x14¾	24	230
W24X162	A	12½x⅝x3'-7"	5x⅝x3'-7"	48	5	3½	2 5/16	-	7⅛	C	20⅞x⅝x28¼	48	690
W24X146	A	12½x½x3'-0"	5x½x3'-0"	40	4	3½	2⅞	-	7⅛	B	20⅞x⅝x21½	36	510

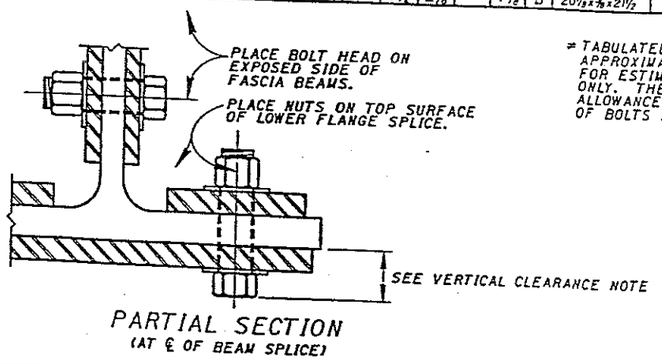

PARTIAL SECTION
(AT ℄ OF BEAM SPLICE)

* TABULATED WEIGHTS ARE APPROXIMATE AND ARE FOR ESTIMATING PURPOSES ONLY. THEY INCLUDE AN ALLOWANCE FOR WEIGHT OF BOLTS AND WASHERS.

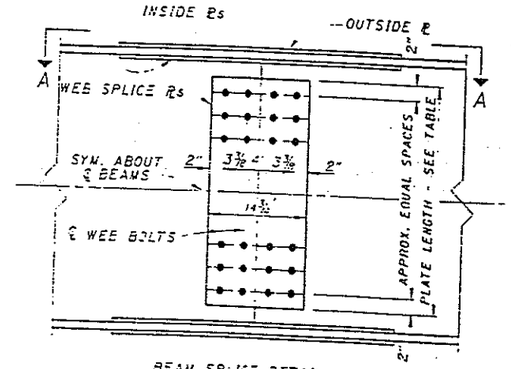

BEAM SPLICE DETAIL
WEB SPLICE - TYPE A

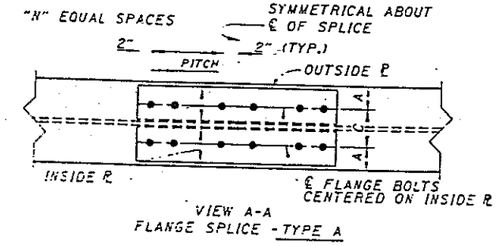

VIEW A-A
FLANGE SPLICE - TYPE A

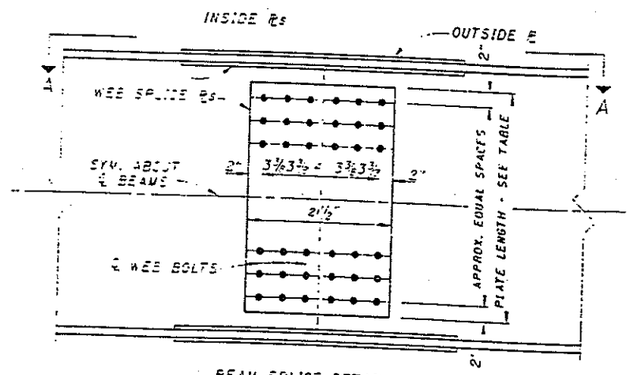

BEAM SPLICE DETAIL
WEB SPLICE - TYPE B

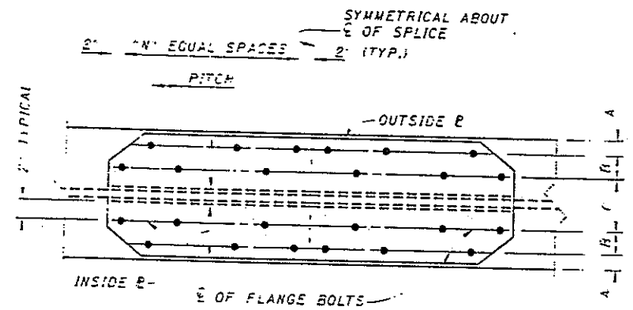

VIEW A-A
FLANGE SPLICE - TYPE B

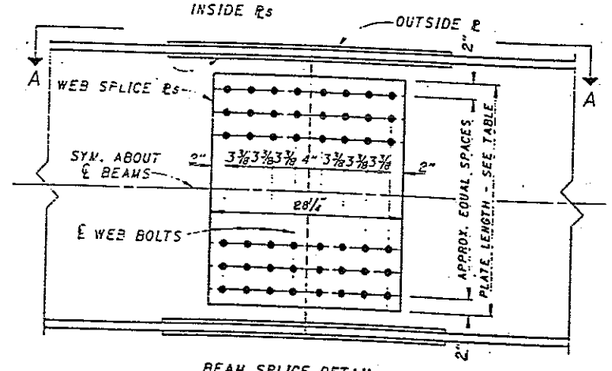

BEAM SPLICE DETAIL
WEB SPLICE - TYPE C

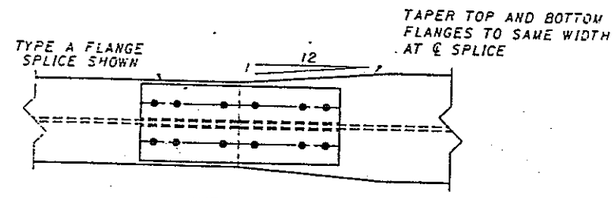

VIEW A-A
SPLICE DETAIL FOR BEAMS HAVING DIFFERENT FLANGE WIDTHS

NOTE: ALL SHAPES AND PLATES SHALL BE DESIGNATED (CVN). AND SHALL MEET SPECIFIED MINIMUM NOTCH TOUGHNESS REQUIREMENTS AS SPECIFIED IN 711.01 OF CMS.

NOTE: ALL FASTENERS ARE 1⅛" DIAMETER HIGH STRENGTH BOLTS. ASTM A-325

DESIGN AGENCY
BUREAU OF BRIDGES AND STRUCTURAL DESIGN

STATE OF OHIO DEPARTMENT OF TRANSPORTATION
ENGINEER OF BRIDGES
DATE

REVIEWED
ENGINEER SAM
BS-1-93
DESIGNER GLA
DRAWN SAM
REVISIONS

STANDARD
BOLTED BEAM SPLICE
FOR STEEL BEAM BRIDGES
(FOR 50 KSI STEEL)

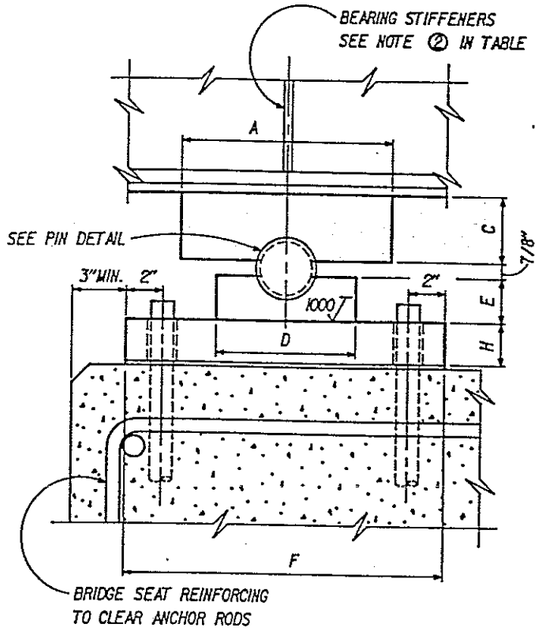

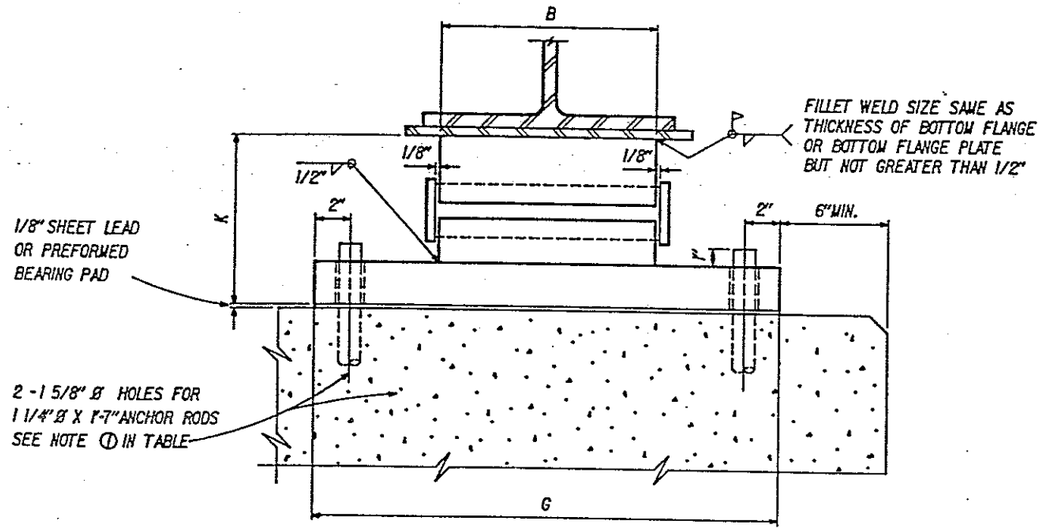

ELEVATIONS OF FIXED BEARING

SEE TABLE FOR ADDITIONAL DIMENSIONS

	FIXED BEARING NO.	FIXED BEARINGS DIMENSIONS (INCHES) A	B	C	D	E	F	G	H	K	DIA.	WEIGHT EA. (LBS.)	MAXIMUM LOAD (LBS.)
①	F - 50	6	6	1 1/2	3	1 1/4	8	16	1 1/2	5 1/8	2	100	50,000
①	F - 100	7	9	1 3/4	4	1 1/2	9	18	1 1/2	5 5/8	2	143	100,000
	F - 150	9	9	2 1/2	5	1 1/2	11	20	2	6 7/8	2 1/2	244	150,000
	F - 200	10	10	3	6	2	11	22	2	7 7/8	2 1/2	300	200,000
	F - 250	11	10	3 1/2	7	2	12	24	2 1/2	8 7/8	3	400	250,000
	F - 300	12	11	3 3/4	8	2 1/2	14	25	2 1/2	9 5/8	3	502	300,000
②	F - 350	12	11	3 3/4	8	2 1/2	16	25	2 1/2	9 5/8	3	540	350,000
②	F - 400	12	12	3 3/4	8	2 1/2	18	26	2 1/2	9 5/8	3	610	400,000

① ONLY 2 ANCHOR RODS REQUIRED, PLACED IN DIAGONALLY OPPOSITE CORNERS OF THE MASONRY PLATE.

② BEARING STIFFENERS ARE REQUIRED ON BOTH SIDES OF THE BEAM OR GIRDER WEB ABOVE.

WEIGHTS GIVEN ARE FOR ONE COMPLETE BEARING, INCLUDING SHEET LEAD AND ANCHOR RODS.

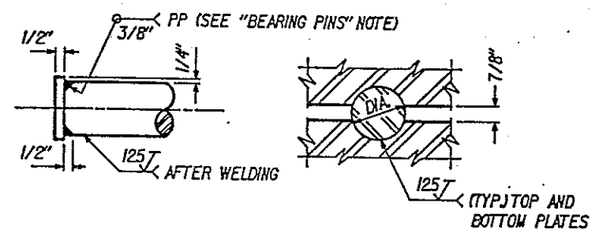

BEARING PIN DETAIL

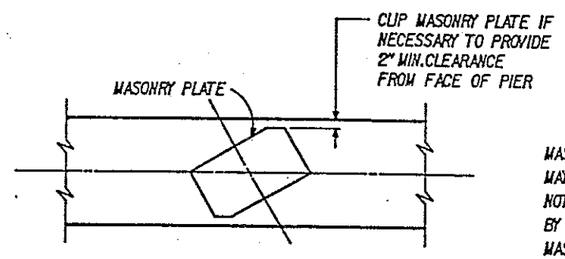

PLAN VIEW OF TOP OF PIER

SHOWING MASONRY PLATE FOR BRIDGE ON SKEW

MASONRY PLATE DIMENSIONS SHOWN IN TABLE MAY BE USED PROVIDED CLIPPED CORNERS DO NOT REDUCE THE BEARING AREA OF THE PLATE BY MORE THAN 5%. BEARINGS WITH CLIPPED MASONRY PLATES SHALL BE IDENTIFIED ON THE PLANS WITH THE WORD "MODIFIED". THUS : "F - 300 MODIFIED"

NOTES

DESIGN SPECIFICATIONS : THIS STANDARD DRAWING CONFORMS TO THE REQUIREMENTS OF "STANDARD SPECIFICATIONS FOR HIGHWAY BRIDGES" ADOPTED BY THE AMERICAN ASSOCIATION OF STATE HIGHWAY AND TRANSPORTATION OFFICIALS, 1977, INCLUDING THE 1978, 1979, 1980 AND 1981 INTERIMS TO THE ABOVE AND THE OHIO SUPPLEMENT TO THESE SPECIFICATIONS, EXCEPT THAT THE MASONRY PLATES FOR THE BEARINGS ARE DESIGNED ON THE BASIS OF AN ALLOWABLE BENDING STRESS OF 30,000 P.S.I. ASSUMING UNIFORM DISTRIBUTION OF BEARING ON THE CONCRETE.

STEEL PLATES : IF THE SUPERSTRUCTURE MEMBERS ARE A36 STEEL THE PLATES SHALL BE THE SAME MATERIAL AND SHALL BE PAINTED IN ACCORDANCE WITH THE SAME SPECIFICATIONS. IF THE SUPERSTRUCTURE MEMBERS ARE A588 STEEL, UNPAINTED, THE PLATE ELEMENT ABOVE THE BEARING PIN SHALL ALSO BE A588 STEEL. THE PLATE ELEMENTS BELOW THE BEARING PIN MAY BE EITHER A36, GALVANIZED BEFORE WELDING, OR A588 UNPAINTED, BUT BOTH PLATES SHALL BE OF THE SAME MATERIAL.

BEARING PINS : IF THE SUPERSTRUCTURE MEMBERS ARE A36 STEEL THE PINS SHALL BE MADE FROM STOCK MEETING THE REQUIREMENTS OF 711.04 OF THE CONSTRUCTION AND MATERIAL SPECIFICATIONS, AND SHALL BE PAINTED IN ACCORDANCE WITH THE SAME SPECIFICATIONS AS THOSE FOR PAINTING THE SUPERSTRUCTURE MEMBERS. IF THE SUPERSTRUCTURE MEMBERS ARE A588 STEEL AND THE BOTTOM PLATES ARE A36, GALVANIZED, THE PINS SHALL BE AS ABOVE, GALVANIZED INSTEAD OF PAINTED. IF THE BOTTOM PLATES ARE A588 THE PINS SHALL ALSO BE A588. BEARING PINS MAY BE FABRICATED FROM ONE PIECE OF STOCK OR FROM ROD STOCK AND PLATES, WELDED AS SHOWN ON THESE DETAILS.

SURFACE FINISH : SURFACE FINISHES SHOWN ON THESE DETAILS SHALL BE MINIMUM BEFORE GALVANIZING. A 500 FINISH OR SMOOTHER SHALL BE USED WHERE NOT OTHERWISE NOTED.

ROADWAY GRADE : IF THE ROADWAY GRADE EXCEEDS 2% THE UPPER LOAD PLATE OF THE BEARING SHALL BE BEVELED TO MATCH THE GRADE. DIMENSION C SHALL BE MAINTAINED AT THE CENTER OF THE PLATE.

LATERAL EXPANSION : ALL BEARINGS MUST BE ACCURATELY PLACED SO THAT PROPER CLEARANCE WILL BE PROVIDED AT ALL BEARINGS FOR LATERAL EXPANSION OF THE SUPERSTRUCTURE. IF THE SUPERSTRUCTURE EXCEEDS 60' IN WIDTH THE 1/8" CLEARANCE SHOWN AT EACH END OF THE BEARING PIN SHALL BE INCREASED. A CLEARANCE OF 1/4" AT EACH END WILL BE ADEQUATE FOR A SUPERSTRUCTURE WIDTH UP TO 120'.

BEARING ANCHOR RODS : AT THE OPTION OF THE CONTRACTOR, THE BEARING ANCHOR RODS (OR FORMED HOLES), LOCATED AND SUPPORTED BY TEMPLATES, MAY BE CAST IN PLACE.

BRIDGE SEAT REINFORCING : PROJECT PLAN SHALL INCLUDE A PLAN VIEW OF THE SEAT AREA FOR THE FIXED BEARING SHOWING THE OUTLINE OF THE MASONRY PLATE, THE ANCHOR RODS AND THE MAIN REINFORCING BARS IN THE TOP OF THE BRIDGE SEAT. ADEQUATE DIMENSIONS SHALL BE PROVIDED TO ENSURE THAT THERE WILL BE NO INTERFERENCE BETWEEN THE ANCHOR RODS AND THE RE-BARS, AND THAT THE SEAT AREA WILL ACCOMODATE THE BEARING.

REVISIONS

STATE OF OHIO
DEPARTMENT OF HIGHWAYS
DIVISION OF DESIGN AND CONSTRUCTION
BUREAU OF BRIDGES

STANDARD

FIXED BEARINGS
FOR STEEL BEAM AND GIRDER BRIDGES

APPROVED : Robert B. Chicken
ENGINEER OF BRIDGES
DATE : 5-10-82

DRAWING NO. FB-1-82

PREPARED	TRACED	CHECKED	REVIEWED
DWI BFG	REF	FFE	WJJ