STRUCTURE - GENERAL NOTES (M.P. 151.3)

PROPOSED WORK

THE OHIO TURNPIKE RAMP OVER THE FRENCH CREEK STRUCTURE SHALL BE REPLACED UNDER THIS CONTRACT. THE WORK INCLUDES THE REPLACEMENT OF A SLAB BRIDGE WITH A PRECAST CULVERT. DETAILS OF THIS WORK ARE SHOWN IN THE PLANS.

DESIGN SPECIFICATIONS

THIS STRUCTURE CONFORMS TO THE "STANDARD SPECIFICATIONS FOR HIGHWAY BRIDGES" ADOPTED BY THE AMERICAN ASSOCIATION OF STATE HIGHWAY AND TRANSPORTATION OFFICIALS, 17TH EDITION, INCLUDING INTERIMS, AND THE 2004 ODOT BRIDGE DESIGN MANUAL, INCLUDING INTERIMS.

THE CLASS OF CONCRETE AND THE GRADES OF REINFORCING STEEL FOR THE CONSTRUCTION ARE AS FOLLOWS:

CONCRETE CLASS QC1 - COMPRESSIVE STRENGTH 4,000 P.S.I.
REINFORCING STEEL - ASTM A615 OR A996 - GRADE 60

DESIGN LOADING

HS20-44 (CASE II) AND THE ALTERNATE MILITARY LOADING

ORIGINAL CONSTRUCTION PLANS

ORIGINAL CONSTRUCTION PLANS, SHOWING THE ORIGINAL ALIGNMENT, PROFILE AND DETAILS OF THE BRIDGE ARE AVAILABLE ON BID EXPRESS WITH OTHER CONTRACT DOCUMENTS.

PROTECTION OF TRAFFIC

THE CONTRACTOR SHALL SUBMIT A PLAN TO PROTECT THE TRAVELING PUBLIC FROM ALL REMOVAL DEBRIS AND/OR CONSTRUCTION MATERIAL THAT MAY COME IN CONTACT OR POSE A DANGER TO THE TRAVELING PUBLIC. SLURRY AND/OR WASTE SHALL NOT BE PERMITTED TO FLOW ONTO OPEN LANES OF TRAFFIC OR INTO STORM SEWERS. THE CONTRACTOR MAY PERFORM THE WORK DURING A WEEKEND, IN ACCORDANCE WITH SP 104. THE PLAN MUST BE SUBMITTED TO THE COMMISSION AND GOVERNING LOCAL AGENCIES PRIOR TO THE COMMENCEMENT OF ANY WORK.

UTILITIES

THE CONTRACTOR SHALL EXERCISE DUE CAUTION WHILE PERFORMING WORK ACTIVITIES AROUND EXPOSED UTILITIES. THE CONTRACTOR MUST ENSURE THAT THESE UTILITIES ARE NOT DAMAGED AS A RESULT OF WORK ACTIVITIES OR THE OPERATION OF EQUIPMENT, AND THE CONTRACTOR MAY BE REQUIRED TO PROVIDE TEMPORARY PROTECTIVE OR SUPPORT SYSTEMS IN ORDER TO PREVENT DAMAGE TO UTILITY LINES AND THEIR SUPPORTS DURING STRUCTURE REPAIR OPERATIONS. IF ANY UTILITIES ARE DAMAGED DURING CONSTRUCTION ACTIVITIES, THE CONTRACTOR SHALL IMMEDIATELY NOTIFY THE ENGINEER AND THE APPROPRIATE UTILITY OWNER(S).

ITEM SP 536 - CONCRETE WEATHERPROOFING

ITEM SP 536 - CONCRETE WEATHERPROOFING SHALL BE APPLIED TO THE FOLLOWING NEW EXPOSED CONCRETE SURFACES OF THE BRIDGE;

- ALL EXPOSED HEADWALL SURFACES
- ALL EXPOSED WINGWALL SURFACES
- FACES OF CULVERTS

CARE SHALL BE TAKEN NOT TO APPLY WEATHERPROOFING ON CONSTRUCTION JOINT SURFACES AND SURFACES TO RECEIVE JOINT SEALER.

CONSTRUCTION JOINTS

CONSTRUCTION JOINT SURFACES SHALL BE FREE FROM OIL, LAITANCE, FROM RELEASE AGENT, OR ANY OTHER MATERIAL THAT WOULD PREVENT BONDING TO THE CONCRETE SURFACE. ALL LAITANCE AND OTHER CONTAMINANTS SHALL BE REMOVED BY HIGH PRESSURE WATER BLASTING WITH A MINIMUM PRESSURE OF 5,000 P.S.I. HOWEVER, WATER BLASTING SHALL NOT BE REQUIRED WHERE EXISTING CONCRETE HAS BEEN ROUGHENED BY JACKHAMMERS DURING CONCRETE REMOVAL OPERATIONS. SURFACES SHALL BE THOROUGHLY DRENCHED WITH CLEAN WATER AND ALLOWED TO DRY TO A DAMP CONDITION FREE OF STANDING WATER BEFORE PLACING CONCRETE. PREPARATION OF CONSTRUCTION JOINT SURFACES SHALL NOT BE MEASURED FOR PAYMENT. THE COST THEREOF SHALL BE INCLUDED IN THE CONTRACT PRICE OF THE PERTINENT CONCRETE ITEMS.

FOUNDATION BEARING RESISTANCE:

WINGWALL FOOTINGS, AS DESIGNED, PRODUCE A MAXIMUM BEARING PRESSURE OF .94 TONS PER SQUARE FOOT. THE ALLOWABLE BEARING PRESSURE IS 1 TON PER SQUARE FOOT.

ITEM 659 - SEEDING AND MULCHING

THE FOLLOWING QUANTITIES ARE PROVIDED TO PROMOTE GROWTH AND CARE OF THE PERMANENT SEEDED AREAS:

659, SOIL ANALYSIS TEST	2 EACH
659, TOPSOIL	42 CU. YD.
659, SEEDING AND MULCHING	370 SQ. YD.
659, REPAIR SEEDING AND MULCHING	18 SQ. YD.
659, COMMERCIAL FERTILIZER	0.1 TON
659, LIME	0.1 ACRES
659, WATER	2 M. GAL

SEEDING AND MULCHING SHALL BE APPLIED TO ALL AREAS OF EXPOSED SOIL BETWEEN THE RIGHT-OF-WAY LINES, AND WITHIN THE CONSTRUCTION LIMITS FOR AREAS OUTSIDE THE RIGHT-OF-WAY LINES COVERED BY WORK AGREEMENT OR SLOPE EASEMENT. QUANTITY CALCULATIONS FOR SEEDING AND MULCHING ARE BASED ON THESE LIMITS.

ITEM 512 - WATERPROOFING

TYPE 2 WATERPROOFING, PER ODOT CONSTRUCTION AND MATERIAL SPECIFICATIONS (C&MS), SHALL EXTEND VERTICALLY DOWN THE ENTIRE SIDES OF THE PRECAST CULVERT SECTIONS AND BE APPLIED TO THE ENTIRE TOP SURFACE OF THE PRECAST CULVERT SECTIONS AND SHALL EXTEND ONE FOOT VERTICALLY DOWN THE SIDES FOR ALL PORTIONS OF THE CULVERTS AND MORTAR JOINT WHICH SHALL BE IN CONTACT WITH THE BACKFILL. PAYMENT FOR THE MEMBRANE WATERPROOFING SHALL BE AT THE CONTRACT PRICE BID PER SQUARE YARD FOR ITEM 512 - TYPE 2 WATERPROOFING.

ITEM 625 - RELOCATION OF EXISTING LIGHTING CIRCUIT

TWO WEEKS PRIOR TO DISCONNECTION OF THE EXISTING LIGHTING CIRCUIT THE CONTRACTOR SHALL CONTACT PAUL CAMPBELL AT 440-821-3369 OR PAUL.CAMPBELL@OHIOTURNPIKE.ORG.

THE LIGHTING CIRCUIT SHALL BE DISCONNECTED AND SECURED SO THE UPSTREAM LIGHT POLES REMAIN FUNCTIONAL DURING CONSTRUCTION.

THE FOLLOWING QUANTITIES ARE FORWARDED TO THE GENERAL SUMMARY FOR USE IN RELOCATING THE EXISTING LIGHTING CIRCUIT:

6 EACH	CONNECTION, FUSED PULL APART
2 EACH	CONNECTION, UNFUSED BOLTED
2 EACH	DISCONNECT CIRCUIT
150 FT	CONDUIT, 2", 725.04
150 FT	TRENCH
786 FT	DISTRIBUTION CABLE REMOVED
2 EACH	PULL BOX REMOVED AND REPLACED

-DISCONNECT THE EXISTING CIRCUIT AT BOTH ADJACENT LIGHT POLES
-PULL AND STORE THE EXISTING DISTRIBUTION CABLES TO CLEAR THE IMMEDIATE AREA
-PULL AND RECONNECT THE EXISTING CABLE WHEN STRUCTURE CONSTRUCTION IS COMPLETE
-EXISTING CONDUIT IN THE CONSTRUCTION AREA IS TO BE ABANDONED
-EXISTING PULL BOXES ADJACENT TO THE STRUCTURE ARE TO BE REMOVED AND REINSTALLED.

THE FOLLOWING QUANTITIES ARE FORWARDED TO THE GENERAL SUMMARY FOR USE AS DIRECTED BY THE ENGINEER:

6 EACH	CONNECTION, UNFUSED PERMANENT
786 FT	NO. 4 AWG 600 VOLT DISTRIBUTION CABLE
2 EACH	PULL BOX, 725.08, 18"

CONNECTION BETWEEN EXISTING AND PROPOSED GUARDRAIL

WHEN IT IS NECESSARY TO SPLICE PROPOSED GUARDRAIL TO EXISTING GUARDRAIL, ONLY THE EXISTING GUARDRAIL SHALL BE CUT, DRILLED, OR PUNCHED. THE CONNECTION SHALL BE MADE USING A W-BEAM, BEAM SPLICE AS SHOWN IN AASHTO M 180-12, EXCEPT THE BEAM WASHERS ARE NOT TO BE USED. PAYMENT SHALL BE INCLUDED IN THE CONTRACT PRICE FOR THE RESPECTIVE GUARDRAIL ITEMS.

NATIONWIDE PERMIT SPECIAL CONDITIONS

1. AT THE REQUEST OF AN AUTHORIZED REPRESENTATIVE OF THE BUFFALO DISTRICT, U.S. ARMY CORPS OF ENGINEERS, THE PERMITTEE MUST ALLOW ACCESS TO THE PROJECT SITE TO DETERMINE COMPLIANCE WITH THE CONDITIONS OF THIS PERMIT.
2. THE PERMITTEE MUST PROVIDE A COPY OF THE PERMIT TO ALL CONTRACTORS, SUBCONTRACTORS, AND/ OR WORKERS PERFORMING THE WORK AUTHORIZED BY THE PERMIT AND ENSURE THEY HAVE KNOWLEDGE OF THE TERMS AND CONDITIONS OF THE PERMIT, INCLUDING ALL GENERAL AND SPECIAL CONDITIONS. PRIOR TO COMMENCING WORK AUTHORIZED BY THIS PERMIT, A COPY OF THE PERMIT AND DRAWINGS MUST BE VISIBLY POSTED AT THE CONSTRUCTION SITE.
3. DISTURBANCE TO THE BED AND/ OR BANKS OF FRENCH CREEK MUST BE LIMITED TO THOSE AREAS SHOWN IN THE PROJECT PLANS.
4. THE PERMITTEE IS PROHIBITED FROM PERFORMING IN-WATER WORK BETWEEN APRIL 15TH AND JUNE 30TH TO PRECLUDE ADVERSE IMPACTS ON THE SPAWNING, NURSERY, AND FEEDING ACTIVITIES OF INDIGENOUS SPECIES. (1)
5. IF ANY FRESHWATER MUSSELS ARE ENCOUNTERED DURING CONSTRUCTION, ALL WORK MUST IMMEDIATELY STOP AND THE PERMITTEE OR THEIR AGENTS/ CONTRACTORS MUST CONTACT, WITHIN 24 HOURS, THE OHIO DEPARTMENT OF NATURAL RESOURCES, DIVISION OF WILDLIFE AND THE U.S. ARMY CORPS OF ENGINEERS AT:

OHIO DEPARTMENT OF NATURAL RESOURCES DIVISION OF WILDLIFE STATE HEADQUARTERS 2045 MORSE ROAD, BUILDING G COLUMBUS, OHIO 43224 1-800-945-3543	REGULATORY BRANCH ATTN: BRIAN SWARTZ U.S. ARMY CORPS OF ENGINEERS 240 LAKE STREET, UNIT D OAK HARBOR, OHIO 43449 (419) 898-3491

6. THE PERMITTEE MUST REMOVE ALL TEMPORARY COFFERDAMS WITHIN SEVEN DAYS OF COMPLETING THE AUTHORIZED WORK AUTHORIZED BY THIS PERMIT.
7. THE PERMITTEE IS REQUIRED TO INSTALL, PRIOR TO ANY GRADING OR FILLING OPERATIONS AND INSTALLATION OF PROPOSED STRUCTURES OR UTILITIES, ALL EROSION AND SEDIMENT CONTROL PRACTICES. THEY MUST REMAIN IN PLACE AND BE MAINTAINED UNTIL CONSTRUCTION IS COMPLETED AND THE AREA IS STABILIZED.
8. THE MECHANICAL EQUIPMENT USED TO EXECUTE THE WORK AUTHORIZED HEREIN MUST BE OPERATED IN SUCH A WAY AS TO MINIMIZE THE TURBIDITY THAT COULD DEGRADE WATER QUALITY AND ADVERSELY AFFECT AQUATIC PLANT AND ANIMAL LIFE.
9. THE PERMITTEE IS AUTHORIZED TO DISCHARGE ONLY CLEAN FILL MATERIAL THAT IS FREE OF FINES, OIL AND GREASE, DEBRIS, WOOD, GENERAL REFUSE, PLASTER, BROKEN ASPHALT, OR OTHER POTENTIAL POLLUTANTS.
10. ALL NECESSARY PRECAUTIONS MUST BE TAKEN TO PRECLUDE THE CONTAMINATION OF ANY WETLAND OR WATERWAY BY SUSPENDED SOLIDS, SEDIMENTS, FUELS, SOLVENTS, LUBRICANTS, EPOXY COATINGS, PAINTS, CONCRETE, LEACHATE, OR ANY OTHER ENVIRONMENTALLY DELETERIOUS SUBSTANCE ASSOCIATED WITH THE PROJECT.

OHIO TURNPIKE RAMP OVER FRENCH CREEK (M.P.151.3)

POINT NUMBER	NORTHING	EASTING	ELEVATION	DESCRIPTION	℄ OHIO TURNPIKE RAMP STATION	℄ OHIO TURNPIKE RAMP OFFSET	℄ FRENCH CREEK STATION	℄ FRENCH CREEK OFFSET
1	624209.84	2104359.33	741.32	CONCRETE MONUMENT	989+16.75	28.09'	10+39.53	-441.04'
2	624125.94	2104998.96	749.71	CONCRETE MONUMENT	995+56.31	-48.79'	10+01.72	202.97'
3	624244.31	2104823.74	738.65	IRON PIN	993+57.57	-108.91'	11+09.03	13.10'
4	624119.99	2104799.50	739.17	IRON PIN	993+68.75	17.24'	9+81.47	4.45'
5	624151.30	2104795.94	737.32	IRON PIN	993+56.61	-11.84'	10+12.44	-1.35'
6	624094.77	2104800.71	740.75	IRON PIN	993+77.04	41.10'	-	-

POSITIONING METHOD: ODOT VRS
HORIZONTAL DATUM: NAD83 (CONUS)/ OHIO NORTH (3401)
GEOID: GEOID 12B (CONUS)
VERTICAL DATUM: NAVD88
ELLIPSOIDAL HEIGHT: 630.477'
BASE POINT FOR SCALE FACTOR: 0,0
COMBINED SCALE FACTOR: 0.999923685
GRID TO GROUND MULTIPLIER: 1.0000763209

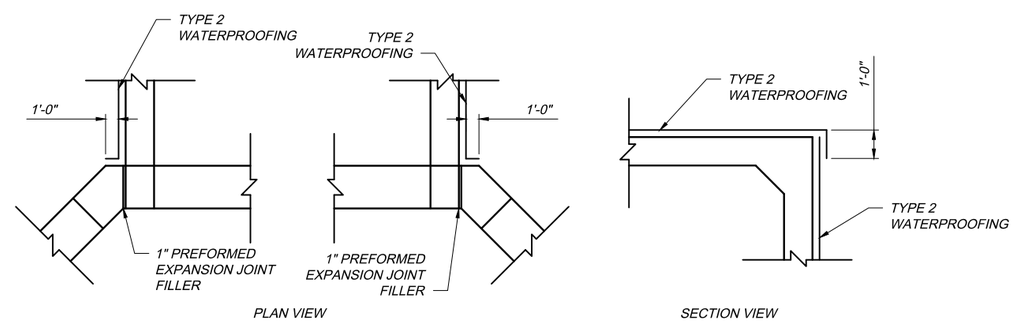

WATERPROOFING DETAILS

NO.	REVISIONS	BY	DATE
1	ADDENDUM 1	JLM	1/22

DESIGNED JLM | CHECKED NRP
DRAWN JLM | IN CHARGE DWS

DESIGN AGENCY
LJB Inc. • 2270 Fairview Center Drive, Suite 200
Fairview Park, OH 44126
(937) 299-5600 fax • (937) 299-5700 fax • LJBInc.com

OHIO TURNPIKE

GENERAL NOTES
OHIO TURNPIKE RAMP OVER FRENCH CREEK
LORAIN COUNTY
M.P. 151.3

PROJECT 43-22-04
DATE: 3/19/2021

OHIO TURNPIKE AND INFRASTRUCTURE COMMISSION

MP 1513 SN001.dwg; 1/25/22 - 2:33pm

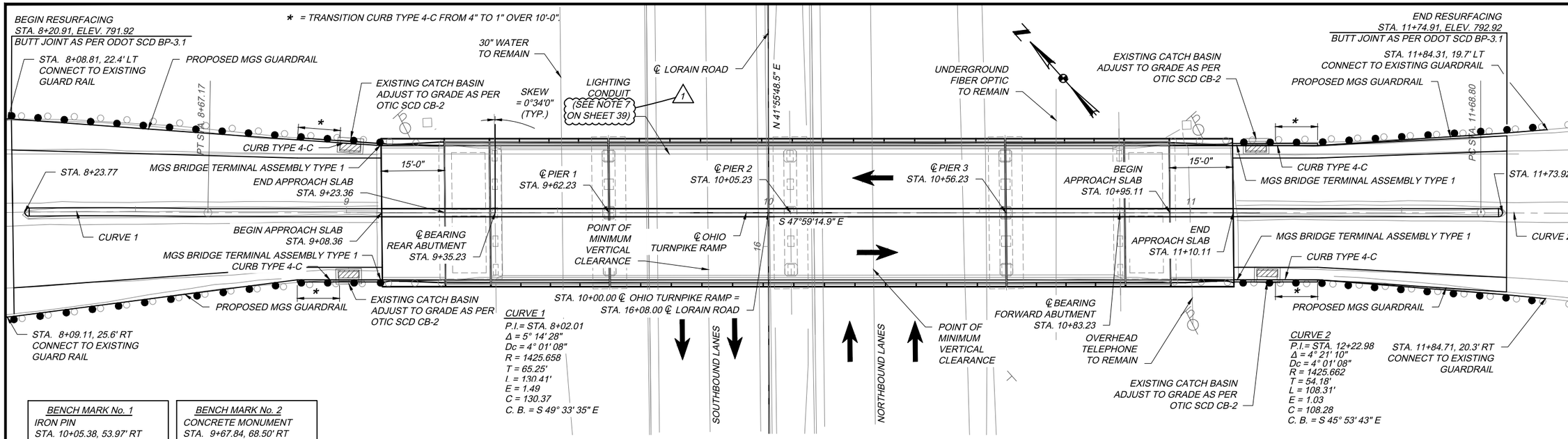

GENERAL PLAN

BENCH MARK No. 1	BENCH MARK No. 2
IRON PIN STA. 10+05.38, 53.97' RT ELEVATION 778.16	CONCRETE MONUMENT STA. 9+67.84, 68.50' RT ELEVATION 777.47

LOCATION OF FIRST GUARDRAIL POST	
STA. 9+07.24 LT	STA. 11+10.91 LT
STA. 9+07.55 RT	STA. 11+11.22 RT

POINT OF MINIMUM VERTICAL CLEARANCE			
LANES	EXISTING	PROPOSED	REQUIRED
NORTHBOUND LANES	15'-0 1/4"	15'-0 1/4"	14'-6"
SOUTHBOUND LANES	14'-11 1/2"	14'-11 1/2"	14'-6"

EXISTING STRUCTURE

TYPE: CONTINUOUS AND SIMPLE SPAN STEEL BEAMS WITH NON-COMPOSITE REINFORCED CONCRETE DECK, SUBSTRUCTURE, CELLULAR ABUTMENTS, AND CAP AND COLUMN PIERS

SPANS: 27'-0"±, 43'-0"±, 51'-0"±, 27'-0"±

ROADWAY: 30'-8"± TOE-TO-TOE OF PARAPETS

ALIGNMENT: TANGENT

SKEW: 00°34'00"± RIGHT FORWARD

WEARING SURFACE: MONOLITHIC CONCRETE

LOADING: CF 2000

BUILT: 1954, REHAB 1988

STRUCTURE FILE NUMBER: 4729943

APPROACH SLABS: 15'-0"± LONG

PROPOSED STRUCTURE

PROPOSED WORK: REINFORCED CONCRETE DECK REPLACEMENT WITH 1'-6" SINGLE SLOPE PARAPETS

TYPE: CONTINUOUS AND SIMPLE SPAN STEEL BEAMS WITH COMPOSITE REINFORCED CONCRETE DECK, SUBSTRUCTURE, CELLULAR ABUTMENTS, AND CAP AND COLUMN PIERS

SPANS: 27'-0"±, 43'-0"±, 51'-0"±, 27'-0"±

ROADWAY: 31'-10" TOE-TO-TOE OF PARAPETS

ALIGNMENT: TANGENT

SKEW: 00°34'00" RIGHT FORWARD

WEARING SURFACE: 1" MONOLITHIC CONCRETE

LOADING: HS20-44 CASE II AND ALTERNATE MILITARY

COORDINATES: LATITUDE: 41°22'48" N
LONGITUDE: 81°58'60" W

APPROACH SLABS: 15'-0" LONG

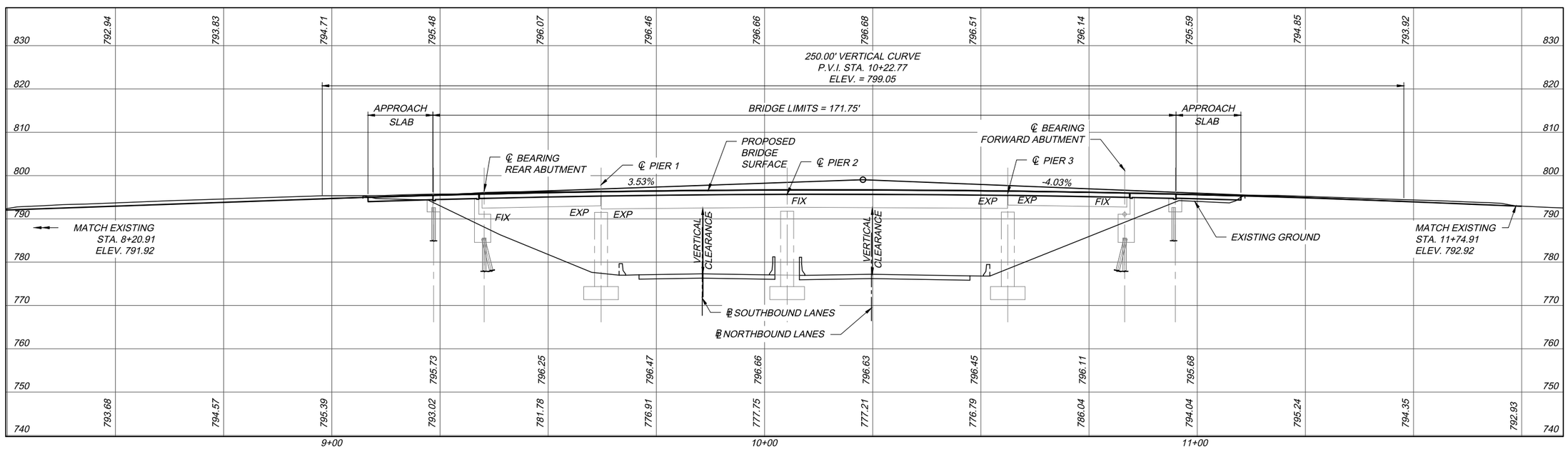

PROFILE ALONG ℄ OHIO TURNPIKE RAMP

MP 1523_Lorain_SP001.dwg; 1/25/22 - 2:33pm

DESIGN AGENCY
LJB Inc. • 2270 Fairview Center Drive, Suite 200
Fairview Park, OH 44126
(937) 299-5600 • (800) 255-1000 fax • LJBInc.com

NO.	REVISIONS	BY	DATE
1	ADDENDUM 1	JLM	1/22
-	-	-	-
-	-	-	-
-	-	-	-

DESIGNED JLM | DRAWN JLM | CHECKED NRP | IN CHARGE DWS

GENERAL PLAN AND PROFILE
OHIO TURNPIKE RAMP OVER LORAIN ROAD
LORAIN COUNTY
M.P. 152.3

PROJECT 43-22-04
DATE: 3/19/2021

1 / 15

28 / 55

OHIO TURNPIKE AND INFRASTRUCTURE COMMISSION

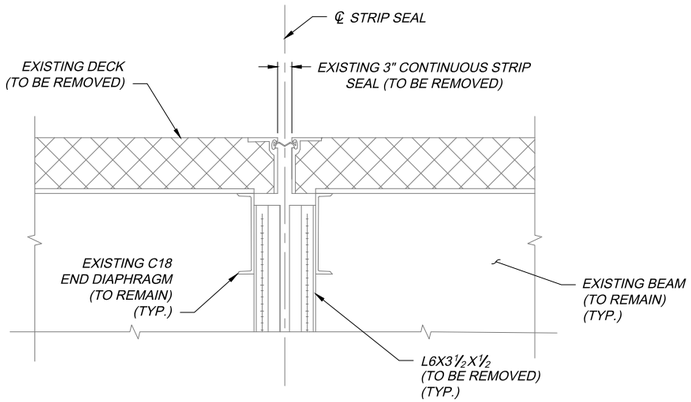

PIER 1 AND PIER 3 SECTION

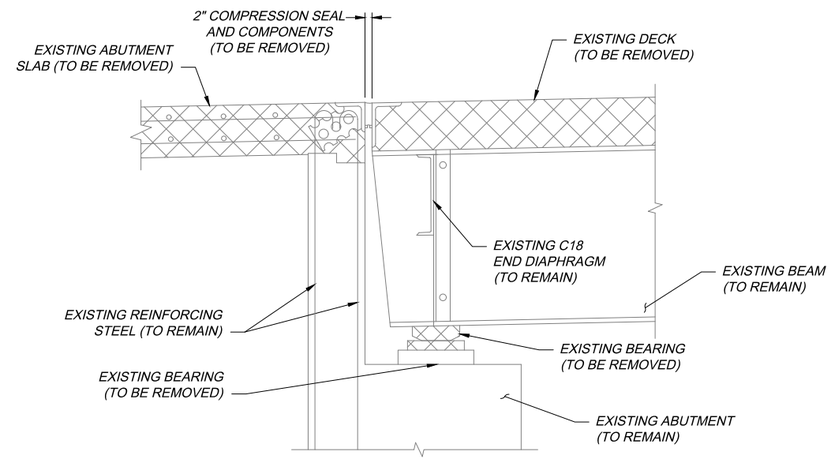

ABUTMENT SECTION

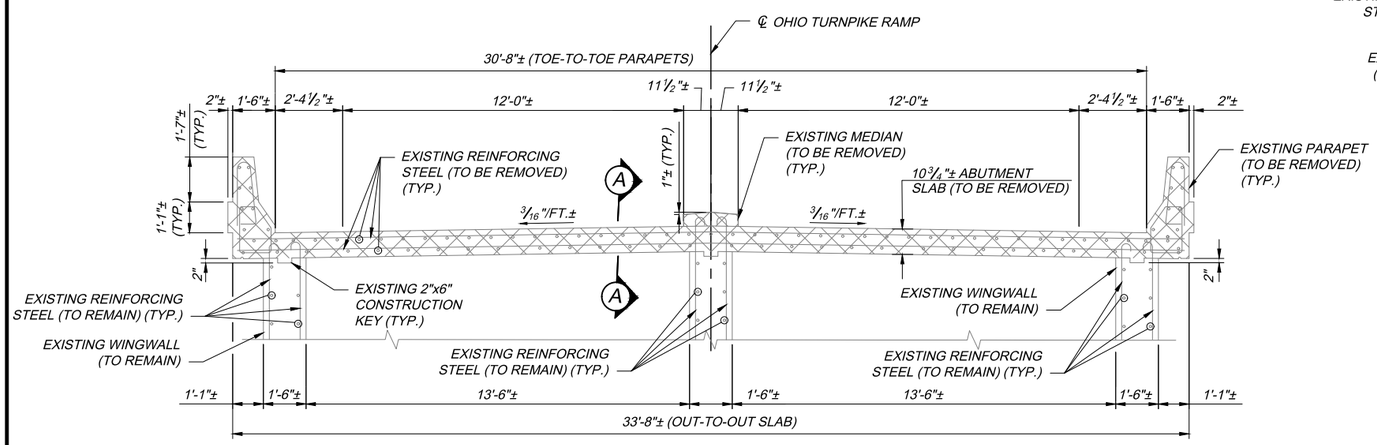

EXISTING ABUTMENT SLAB SECTION

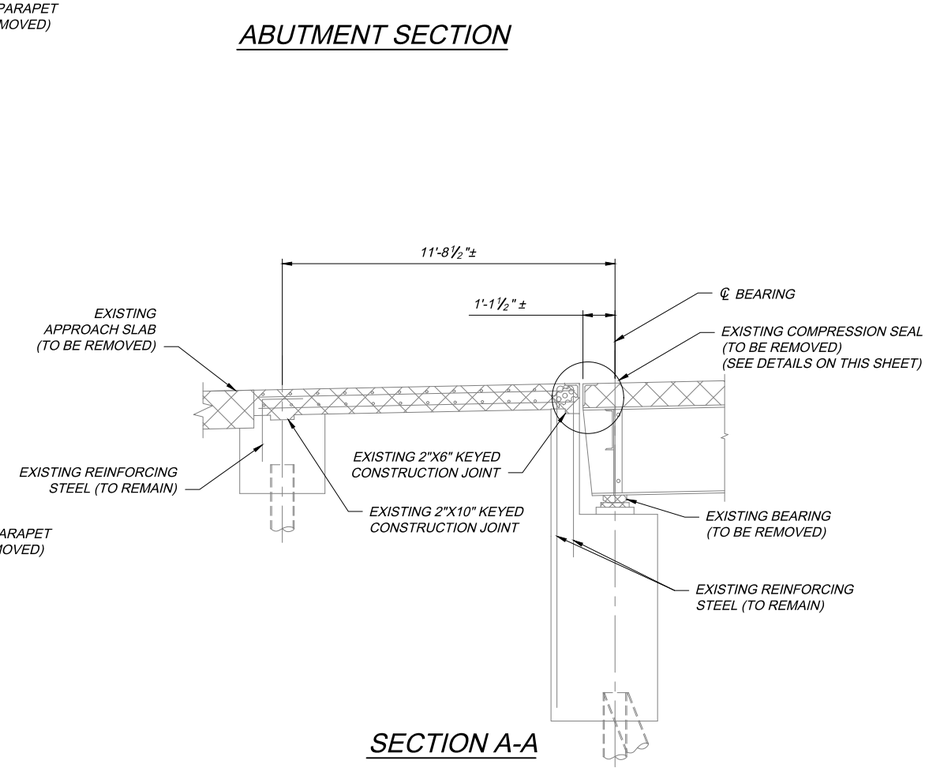

SECTION A-A

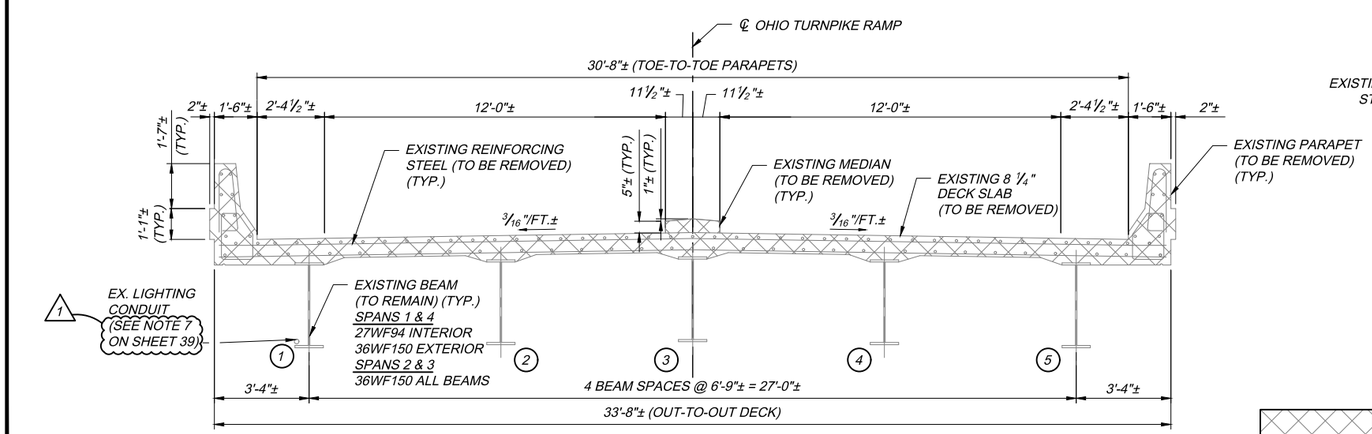

EXISTING TRANSVERSE SECTION

- DENOTES PORTIONS OF STRUCTURE TO BE REMOVED AS PER ITEM SP 202

NO.	REVISIONS	BY	DATE
1	ADDENDUM 1	JLM	1/22
-	-	-	-
-	-	-	-

DESIGNED JLM | CHECKED NRP | DRAWN JLM | IN CHARGE DWS

DESIGN AGENCY
L.ET, Inc. • 22710 Fairview Center Drive, Suite 200
Fairview Park, OH 44126
(937) 299-5825 fax • (937) 258-0022 tel • L.Et.Inc.com

REMOVAL DETAILS
OHIO TURNPIKE RAMP OVER LORAIN ROAD
LORAIN COUNTY
M.P. 152.3

PROJECT 43-22-04
DATE: 3/19/2021

4 / 15

31 / 55

OHIO TURNPIKE AND INFRASTRUCTURE COMMISSION

MP 1523_Lorain_SV001.dwg; 1/25/22 - 2:33pm

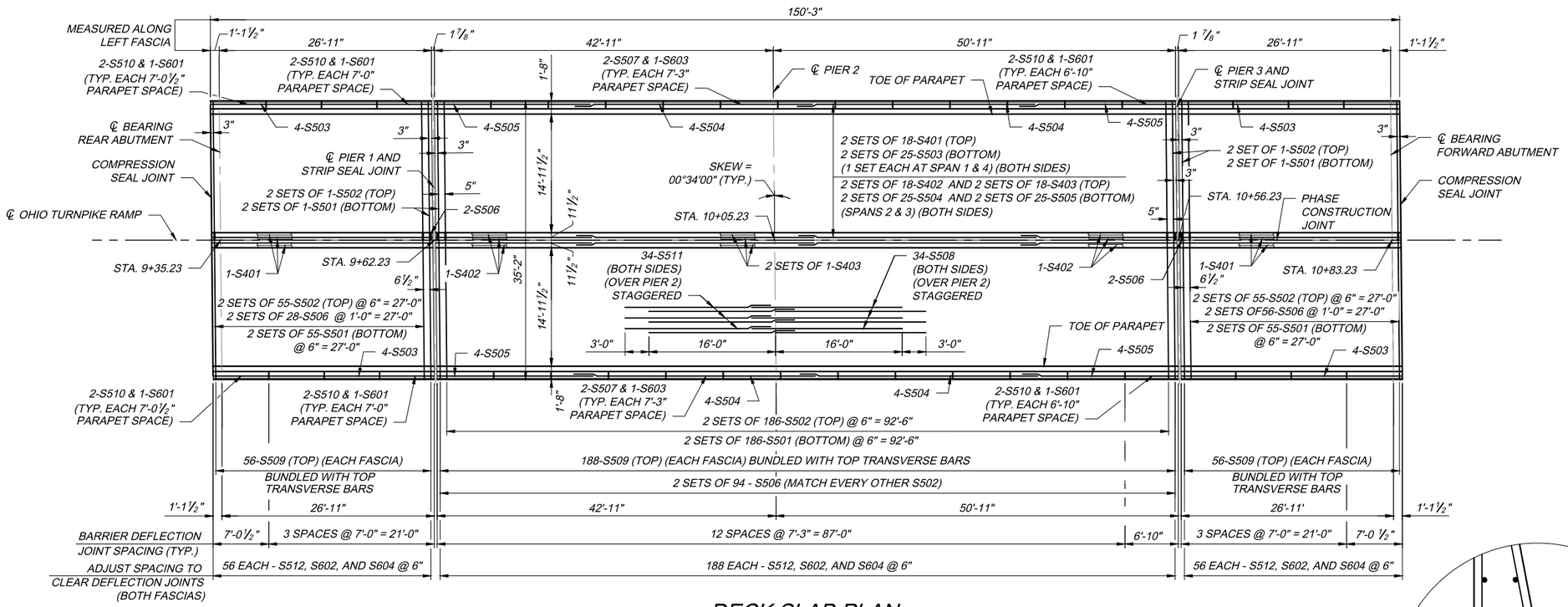

DECK SLAB PLAN

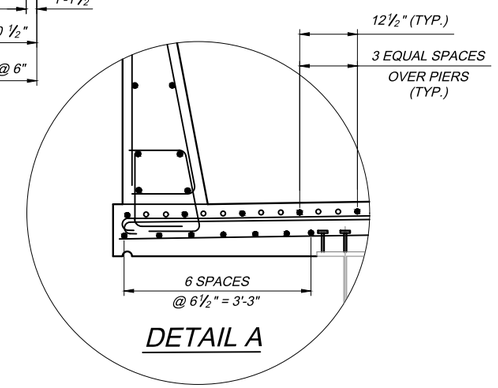

DETAIL A

MINIMUM LAP SPLICES
NO. 4 BAR = 1'-11"
NO. 5 BAR = 2'-5"

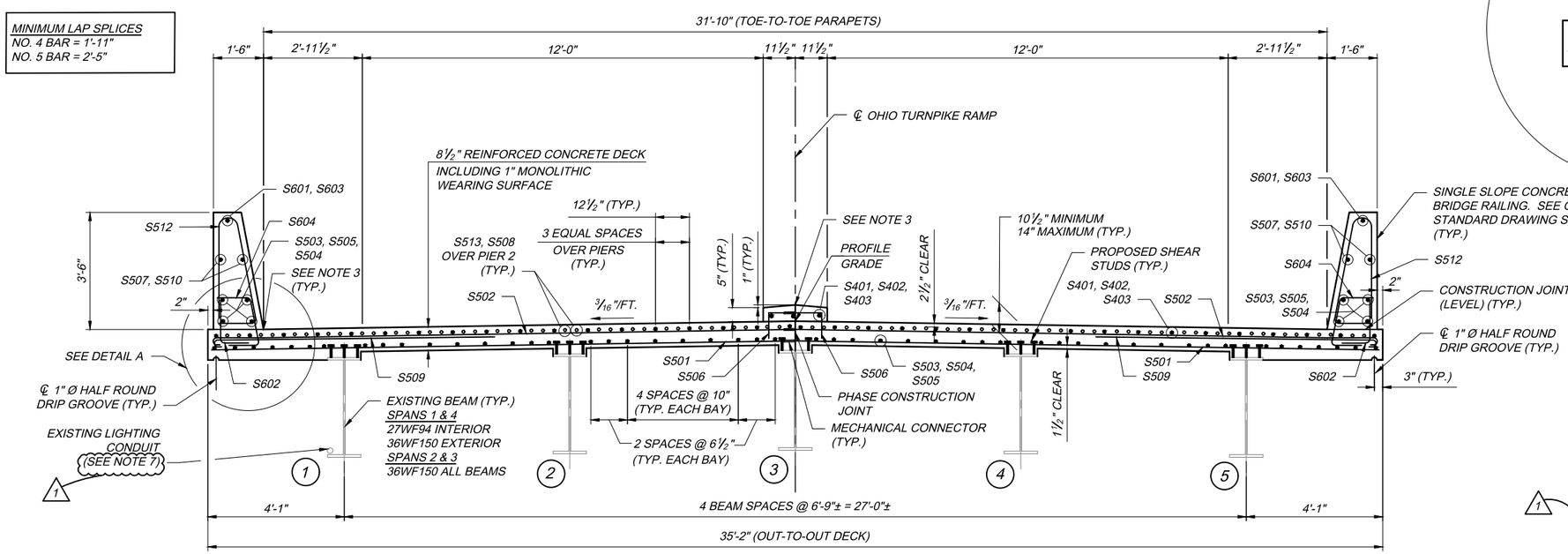

PROPOSED TRANSVERSE SECTION

NOTES

1. FOR ABUTMENT SLAB DETAILS, SEE SHEET 35 OF 55.
2. FOR DECK JOINT DETAILS, SEE OTIC STANDARD DRAWINGS DJ-1, DJ-2 AND DJ-5.
3. LONGITUDINAL AND TRANSVERSE CONSTRUCTION JOINTS SHALL BE TREATED IN ACCORDANCE WITH ITEM SP 516B - SEALING OF CONSTRUCTION JOINTS.
4. JOINT OPENING DIMENSIONS ARE GIVEN AT 60° F.
5. FOR ADDITIONAL SINGLE SLOPE PARAPET DETAILS, SEE ODOT STANDARD DRAWING SBR-1-13.
6. PROVIDE A 1 7/8" GAP IN THE CONCRETE MEDIAN ACROSS STRIP SEAL EXPANSION JOINTS. PROVIDE A 1 ½" GAP IN THE CONCRETE MEDIAN ACROSS COMPRESSION SEAL EXPANSION JOINTS.
7. CONTRACTOR SHALL TEMPORARILY RELOCATE LIGHTING CONDUIT DURING CONSTRUCTION TO AVOID INTERFERENCE WITH DECK FALSEWORK. LIGHTING SHALL BE MAINTAINED DURING CONSTRUCTION. LIGHTING CONDUIT SHALL BE REPLACED IN KIND PER C&MS ITEM 625 ONCE DECK CONSTRUCTION IS COMPLETE. PAYMENT FOR THIS WORK INCLUDING ALL LABOR, EQUIPMENT, MATERIALS, AND INCIDENTALS SHALL BE INCLUDED WITH ITEM SP 202 - PORTIONS OF STRUCTURE REMOVED.

DESIGN AGENCY
LJB Inc. • 22710 Fairview Center Drive, Suit 200
Fairview Park, OH 44126
(937) 299-5600 tel • (937) 299-5700 fax • LJBInc.com

NO.	REVISIONS	BY	DATE
1	ADDENDUM 1	JLM	1/22
-	-	-	-
-	-	-	-

DESIGNED	CHECKED	NO.
JLM	NRP	-
DRAWN	IN CHARGE	-
JLM	DWS	-

DECK SLAB PLAN AND TRANSVERSE SECTION
OHIO TURNPIKE RAMP OVER LORAIN ROAD
LORAIN COUNTY
M.P. 152.3

PROJECT 43-22-04
DATE: 3/19/2021

12 / 15

39 / 55

OHIO TURNPIKE AND INFRASTRUCTURE COMMISSION

MP 1523_Lorain_SD001.dwg; 1/25/22 - 2:34pm