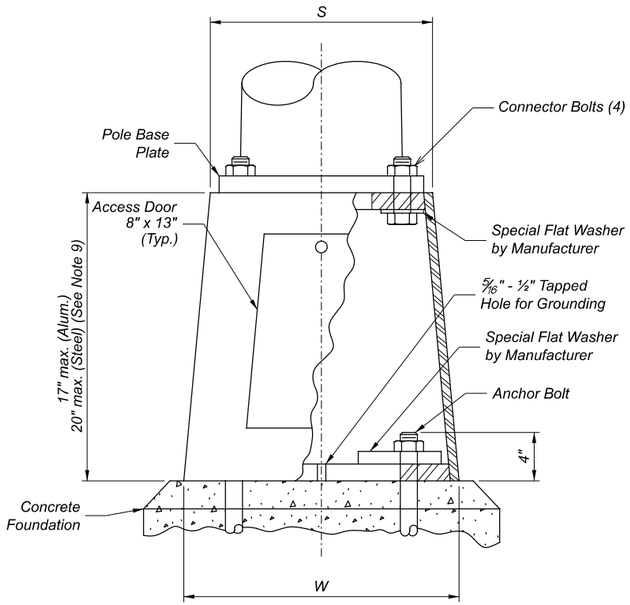

ON TRANSFORMER BASE

(See Note 8)

STEEL ANCHOR BASES

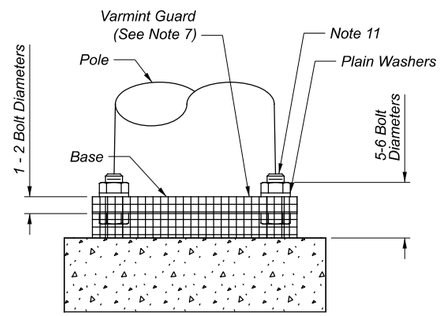

ON CONCRETE FOUNDATION

(Varmint Guard Required, See Note 7)

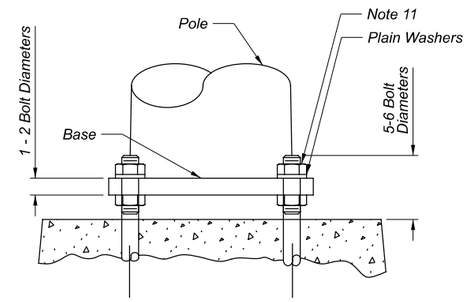

ON MEDIAN BARRIER

(Varmint Guard Required, See Note 7)
(Note 1)

NOTES:

1. For median-mounted poles, Pole Base Plate and Anchor Bolt dimensions will be modified as indicated on Standard Construction Drawing (SCD) HL-20.13.
2. For pole grounding details see SCD HL-60.11.
3. Breakaway bases shall not be used under pole in excess of manufacturer's rated limits for base.
4. Cast aluminum transformer bases shall not be used where overhead wiring is required.
5. For poles mounted on pilasters on bridge parapets, the anchor bolt shape and length will be modified as indicated in the structure plans.
6. Anchor bolts shall be headed or nutted per SCD HL-20.13. L-bends shall not be used.
7. Attach varmint guard with stainless steel band and minimum 2" overlap. Tie overlapping screen with stainless steel wire ties. Guard shall be solid sheet, welded wire mesh or expanded metal sheet, stainless steel or galvanized, with openings no larger than ⅜".
8. Aluminum cast transformer bases qualify as breakaway supports. Steel transformer bases do not.
9. Per NCHRP-350.
10. Use shims of aluminum for plumbing, or other material if approved by the pole manufacturer. Plumbing tolerance: +/- 1/2 degree. Only aluminum anchor bases may be mounted flush to the concrete without leveling nuts.
11. Coordinate with pole manufacturer to determine required bolt circle, bolt diameter, and bolt length. Bolt circle and diameter should match one of the combinations given in the Connector Bolts column of the table below. Minimum anchor bolt length is given in the Anchor Bolts column of the tables.

ALUMINUM ANCHOR BASES

(Note 10)

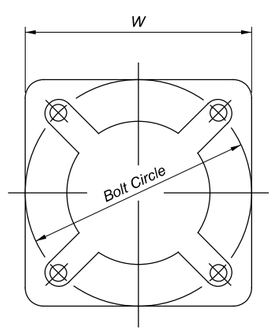

BOTTOM OF TRANSFORMER BASE

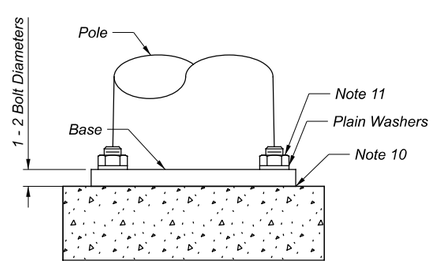

ON CONCRETE FOUNDATION

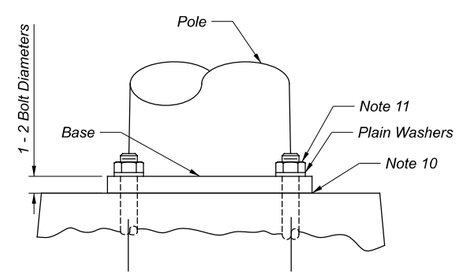

ON MEDIAN BARRIER

(Note 1)

ALUMINUM TRANSFORMER BASES (See Note 8)

TYPE	S	CONNECTOR BOLTS		W	ANCHOR BOLTS (Note 1) (Note 6)	
		BOLT CIRCLE	BOLTS		BOLT CIRCLE	BOLTS
AT-A	13"	13"	1"	15"	15"	1" x 40"
AT-C	15"	15"	1 ¼"	17"	17"	1 ¼" x 49"

STEEL TRANSFORMER BASES (See Note 8)

TYPE	S	CONNECTOR BOLTS		W	ANCHOR BOLTS (Note 1) (Note 6)	
		BOLT CIRCLE	BOLTS		BOLT CIRCLE	BOLTS
ST-A	13"	13"	1"	16"	15"	1" x 40"
ST-C	15"	15"	1 ¼"	18"	17"	1 ¼" x 49"
ST-B	17"	17"	1 ½"	25"	22"	1 ½" x 60"

OFFICE OF ROADWAY ENGINEERING

REVISIONS
04-17-2020
01-17-2020
07-20-2018
01-20-2017
07-15-2016
01-15-2016
07-17-2015
01-16-2015

STDS ENGINEER
Duemmel

STATE OF OHIO DEPARTMENT OF TRANSPORTATION ADMINISTRATOR
David L. Holstein

POLE BASE DETAILS

DESIGN AGENCY

SCD NUMBER
HL-10.13

SHEET 1 TOTAL 1