OHIO TURNPIKE AND INFRASTRUCTURE COMMISSION

THE JAMES W. SHOCKNESSY OHIO TURNPIKE

OHIO TURNPIKE

PROJECT NO. 58-20-01

NEW MAINLINE TOLL PLAZA FACILITY

UTILITY BUILDINGS, TOLL BOOTHS & CANOPIES

MILEPOST 49

LUCAS COUNTY, OHIO

OHIO TURNPIKE AND INFRASTRUCTURE STANDARD DRAWINGS

DR-1	10-20-2017		TCR-15	10-20-2017	
TCB-1	10-20-2017				
TCR-1	10-20-2017				
TCR-2	10-20-2017				
TCR-9	10-20-2017				
TCR-14	12-31-2019				

OHIO DEPARTMENT OF TRANSPORTATION STANDARD DRAWINGS

BP-1.1	7-28-2000	TC-22.10	10-18-2013		
BP-2.1	7-17-2015	TC-22.20	1-17-2014		
BP-2.2	7-18-2008	TC-81.11	4-17-2020	1	
BP-5.1	1-18-2019				
BP 7-1	7-20-2018				
CB-2.2	7-20-2018				
CB-2.3	1-15-2016				
DM-1.1	7-21-2017			1	*SUPPLEMENTAL SPECIFICATIONS*
HL-10.13	4-17-2020	HL-10.11	4-17-2020		
HL-30.11	7-20-2018	HL-60.11	7-21-2017		
TC-7.65	7-20-2018			S 1002	
TC-16.21	7-20-2018			S 1078	
TC-21.18	7-19-2019				
TC-21.21	4-17-2020	1			

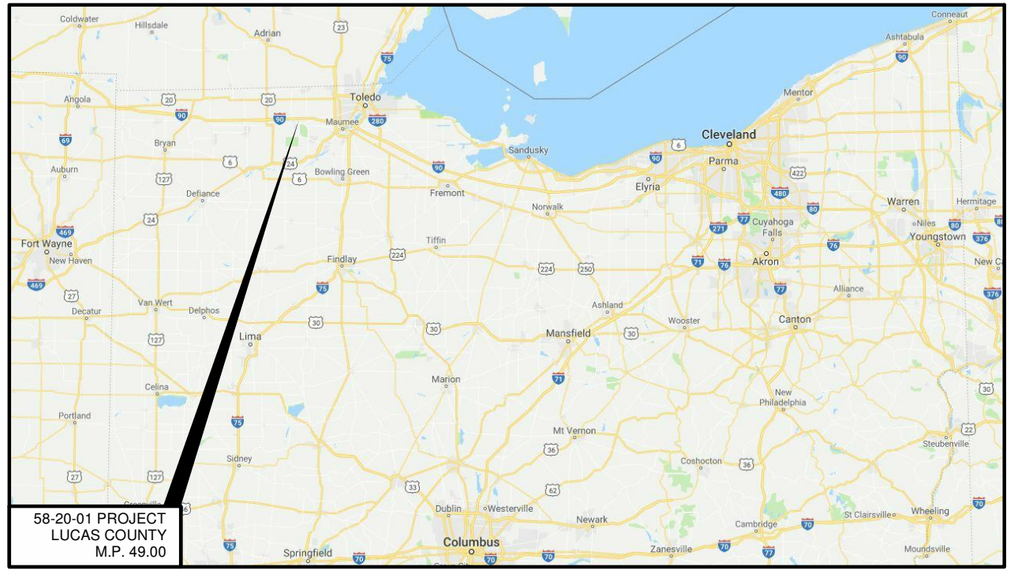

58-20-01 PROJECT
LUCAS COUNTY
M.P. 49.00

N

APPROVED FOR
THE OHIO TURNPIKE AND INFRASTRUCTURE COMMISSION
BY

CHIEF ENGINEER

4-23-2020

DATE

UNDERGROUND UTILITIES

CONTACT BOTH SERVICES
CALL TWO WORKING DAYS
BEFORE YOU DIG

CALL
1-800-362-2764
OR 811 (TOLL FREE)

OHIO UTILITIES PROTECTION SERVICE NON-MEMBERS MUST BE CALLED DIRECTLY

OHIO OIL & GAS PRODUCERS UNDERGROUND PROTECTIVE SERVICE CALL: 614-715-2984 OR 811

OTIC DIVISION TRADES SUPERVISOR:
440-971-2731 - WEST (M.P. 0.0 - M.P. 126.4)
440-971-2781 - EAST (M.P. 126.4 - M.P. 241.26)

ENGINEERS SEAL:

STATE OF OHIO
SHANE M. MORRIS
PE-73638
REGISTERED
PROFESSIONAL ENGINEER

SIGNED:
DATE: 04/22/2020

ARCHITECTS SEAL:

STATE OF OHIO
MICHAEL W. MURPHY
ARC9210118
REGISTERED ARCHITECT

SIGNED:
DATE: 04/22/2020

ENGINEERS SEAL:

STATE OF OHIO
CHRISTOPHER C JACKMAN
E-72656
REGISTERED
PROFESSIONAL ENGINEER

SIGNED:
DATE: 4/22/2020

ENGINEERS SEAL:

STATE OF OHIO
CHAD EDWARD KULAWIAK
E-76587
REGISTERED
PROFESSIONAL ENGINEER

SIGNED:
DATE: 4/22/2020

ENGINEERS SEAL:

STATE OF OHIO
CAMILLE A. MALEH
E-63004
REGISTERED
PROFESSIONAL ENGINEER

SIGNED:
DATE: 4/22/2020

ENGINEERS SEAL:

STATE OF OHIO
MELCHIZEDEK VILLARBA
E-85271
REGISTERED
PROFESSIONAL ENGINEER

SIGNED:
DATE: 4/22/2020

DESIGN CONTRACT:	*71-19-09B*

PLAN PREPARED BY:

PRIME AE®
540 White Pond Drive, Ste. E
Akron, Ohio 44320
(330)-864-7755

NO.	*REVISIONS*	*BY*	*DATE*
1	ADDENDUM No. 2		5-12-20

SHEET NUMBER	SHEET NAME	NUMBER OVERALL
01 GENERAL		
G000	TITLE SHEET	1
G001	DRAWINGS LIST	2
G002	CODE SUMMARY	3
G003	LEVEL 1 - LIFE SAFETY	4
G004	LEVEL 2 - LIFE SAFETY	5
G005	ABBREVIATIONS & MATERIALS	6
G006	SYMBOLS & ANNOTATIONS	7
G007	COORDINATION DRAWING	8
G008	COORDINATION DRAWING	9
G009	COORDINATION DRAWING	10
G010	COORDINATION DRAWING	11
G011	COORDINATION DRAWING	12
02 CIVIL		
C101	GENERAL NOTES	13
C102	GENERAL NOTES	14
C103	SITE PLAN - EXISTING CONDITIONS	15
C104	SITE DIMENSION PLAN - NORTH SITE	16
C105	SITE DIMENSION PLAN - SOUTH SITE	17
C106	SITE UTILITY PLAN – NORTH SITE	18
C107	SITE UTILITY PLAN – SOUTH SITE	19
C108	SITE GRADING PLAN - NORTH SITE	20
C109	SITE GRADING PLAN - SOUTH SITE	21
C110	STORM SEWER PROFILES	22
C111	SITE JOINTING PLAN – NORTH SITE	23
C112	SITE JOINTING PLAN – SOUTH SITE	24
C113	TYPICAL SECTIONS – TOLL PLAZA NORTH SITE	25
C114	TYPICAL SECTIONS – TOLL PLAZA SOUTH SITE	26
C115	TOLL ISLANDS DETAILS – NORTH SITE	27
C116	TOLL ISLANDS DETAILS – SOUTH SITE	28
C117	TOLL ISLANDS DETAILS	29
C118	LED TRUSS ELEVATION DETAIL	30
C119	MISSELLANEOUS SITE DETAILS	31
C120	SWPPP – NORTH SITE	32
C121	SWPPP – SOUTH SITE	33
03 STRUCTURAL		
S001	GENERAL NOTES	34
S002	GENERAL NOTES	35
S003	ABBREVIATIONS AND LOADING DIAGRAMS	36
S004	SPECIAL INSPECTIONS	37
S005	SPECIAL INSPECTIONS	38
S100	FIRST FLOOR FOUNDATION AND FRAMING PLAN	39
S101	SECOND FLOOR FRAMING PLAN	40
S102	ROOF FRAMING PLAN	41
S103	CANOPY FOUNDATION PLANS	42
S104	CANOPY FRAMING PLANS	43
S501	UTILITY BUILDING STRUCTURAL DETAILS	44
S502	UTILITY BUILDING STRUCTURAL DETAILS	45
S503	CANOPY STRUCTURAL DETAILS	46
S504	CANOPY STRUCTURAL DETAILS	47
S505	SIGN SUPPORT DETAILS	48
S506	SIGN SUPPORT DETAILS	49
S507	UTILITY BUILDING STRUCTURAL DETAILS	50
S508	CANOPY SECTIONS AND DETAILS	51
04 BRIDGE		
B100	PEDESTRIAN BRIDGE SITE - WESTBOUND	52
B101	PEDESTRIAN BRIDGE SITE PLAN - EASTBOUND	53
B102	PEDESTRIAN BRIDGE GENERAL NOTES	54
B103	PEDESTRIAN BRIDGE GENERAL NOTES	55
B104	PEDESTRIAN BRIDGE FOUNDATION PLAN	56
B105	PEDESTRIAN BRIDGE END TOWER FRAME DETAILS	57
B106	PEDESTRIAN BRIDGE PIER DETAILS	58
B107	PEDESTRIAN BRIDGE DECK PLAN & SECTION	59
B108	PEDESTRIAN BRIDGE BEARING DETAILS	60
B109	PEDESTRIAN BRIDGE REINFORCING STEEL LIST	61
05 ARCHITECTURAL		
A100	AXON VIEW	62
A101	AXON VIEW	63
A102	OVERALL FIRST FLOOR PLAN	64
A103	OVERALL SECOND FLOOR PLAN	65
A104	FIRST FLOOR PLAN	66
A105	SECOND FLOOR PLAN	67
A106	OVERALL REFLECTED CEILING PLAN FIRST FLOOR PLAN	68
A107	OVERALL REFLECTED CEILING PLAN SECOND FLOOR PLAN	69
A108	REFLECTED CEILING PLANS FIRST FLOOR PLAN	70
A109	REFLECTED CEILING PLANS SECOND FLOOR PLANS	71
A110	OVERALL ROOF PLAN	72

SHEET NUMBER	SHEET NAME	NUMBER OVERALL
A111	ROOF PLANS	73
A112	WESTBOUND CANOPY PLANS	74
A113	EASTBOUND CANOPY PLANS	75
A201	OVERALL BUILDING ELEVATIONS	76
A202	ELEVATION MAIN BUILDING	77
A203	ELEVATION SECONDARY BUILDING	78
A204	PEDESTRIAN BRIDGE ELEVATIONS & DETAILS	79
A205	CANOPY ELEVATIONS	80
A301	BUILDING SECTIONS	81
A302	WALL SECTIONS	82
A303	WALL SECTIONS	83
A304	WALL SECTIONS	84
A305	WALL SECTIONS	85
A306	ROOF SECTIONS & DETAILS	86
A307	CANOPY SECTIONS	87
A401	ENLARGED TOILET PLAN ELEVATIONS MAIN BUILDING	88
A402	ELEVATOR PLAN AND SECTIONS	89
A403	STAIRS PLAN AND SECTION	90
A404	STAIR PLANS AND SECTIONS	91
A405	TOLL BOOTH PLAN AND ELEVATIONS	92
A406	TOLL BOOTH SECTIONS	93
A407	TOLL BOOTH SECTIONS & DETAILS	94
A408	TOLL BOOTH DETAILS	95
A409	TOLL BOOTH DETAILS 1	96
A410	TOLL BOOTH GATE DETAILS - OMITTED	97
A501	EXTERIOR DETAILS	98
A502	EXTERIOR DETAILS	99
A503	BRIDGE CONNECTION DETAILS	100
A504	EXTERIOR DETAILS	101
A505	INTERIOR DETAILS	102
A506	CASEWORK ELEVATIONS & DETAILS	103
A601	DOOR SCHEDULE	104
A602	DOOR DETAILS	105
A603	DOOR DETAILS	106
A604	STOREFRONT & WINDOW LEGEND	107
A605	FINISH SCHEDULE	108
A701	FURNITURE & FINISH PLAN	109
A702	INTERIOR ELEVATIONS	110
A703	INTERIOR ELEVATIONS	111
A704	INTERIOR ELEVATIONS	112
A801	WALL TYPES AND DETAILS	113
A802	WALL TYPES AND DETAILS	114
06 PLUMBING		
P001	PLUMBING LEGENDS AND ABBREVIATIONS	115
P101	OVERALL FIRST FLOOR BELOW GRADE PLUMBING PLAN	116
P102	OVERALL FIRST FLOOR ABOVE GRADE PLUMBING PLAN	117
P103	OVERALL SECOND FLOOR PLUMBING PLAN	118
P104	ROOF PLUMBING PLAN	119
P201	FIRST FLOOR BELOW GRADE ENLARGED PLUMBING PLAN	120
P202	FIRST FLOOR ABOVE GRADE ENLARGED PLUMBING PLAN	121
P203	MAIN BUILDING – LOWER ROOF – PLUMBING PLAN	122
P204	SECOND FLOOR ENLARGED PLUMBING PLAN	123
P205	CANOPY PLUMBING PLAN WESTBOUND	124
P206	CANOPY PLUMBING PLAN EASTBOUND	125
P207	PEDESTRIAN BRIDGE PLUMBING PLAN	126
P208	MAIN UTILITY BUILDING ABOVE GRADE RESTROOM AND JC ENLARGED PLUMBING	127
P301	PLUMBING SCHEDULES	128
P401	PLUMBING DETAILS	129
P402	PLUMBING DETAILS	130
P403	PLUMBING DETAILS	131
P501	PLUMBING RISER DIAGRAMS - DOMESTIC WATER	132
P502	PLUMBING RISER DIAGRAM - SANITARY AND VENT	133
P503	PLUMBING RISER DIAGRAM - STORM WATER PEDESTRIAN BRIDGE	134
P504	PLUMBING RISER DIAGRAM - STORM WATER TOLL BOOTH	135
07 MECHANICAL		
M001	MECHANICAL LEGENDS AND ABBREVIATIONS	136
M101	OVERALL FIRST FLOOR HVAC PLAN	137
M102	OVERALL SECOND FLOOR HVAC PLAN	138
M103	OVERALL ROOF PLAN	139
M104	FIRST FLOOR HVAC PLAN	140
M105	SECOND FLOOR HVAC PLAN	141
M106	HVAC LOWER ROOF PLAN	142
M107	HVAC HIGHER ROOF PLAN	143
M108	TOLL BOOTH HVAC PLAN	144
M109	GENERATOR ROOM ENLARGED HVAC PLAN	145
M110	MECHANICAL SCHEDULE 1	146
M111	MECHANICAL SCHEDULE 2	147
M112	MECHANICAL DETAILS	148
M113	MECHANICAL DETAILS	149
M114	SEQUENCE OF OPERATIONS	150

SHEET NUMBER	SHEET NAME	NUMBER OVERALL
08 ELECTRICAL		
E101	ELECTRICAL LEGEND	151
E102	ELECTRICAL SITE PLAN - NORTH	152
E103	ELECTRICAL SITE PLAN - SOUTH	153
E104	POWER PLAN - 1ST FLOOR	154
E105	NORTH MAIN BUILDING SECOND FLOOR - POWER PLAN	155
E106	SOUTH SECONDARY UTILITY BUILDING SECOND FLOOR - POWER PLAN	156
E107	LIGHTING 1ST FLOOR MAIN & SECONDARY	157
E108	MAIN UTILITY BUILDING SECOND FLOOR LIGHTING PLAN	158
E109	SECONDARY UTILITY BUILDING SECOND FLOOR LIGHTING PLAN	159
E110	CANOPY LIGHTING PLAN	160
E111	TOLLBOOTH	161
E112	FIRE ALARM FIRST FLOOR	162
E113	FIRE ALARM SECOND FLOOR	163
E114	LIGHTNING PROTECTION ROOF PLAN	164
E115	LIGHTNING PROTECTION DETAILS	165
E116	POWER RISER DIAGRAM	166
E117	GROUNDING DETAIL	167
E118	PANEL SCHEDULE MDP	168
E119	PANEL SCHEDULE LP	169
E120	PANEL SCHEDULE PP1	170
E121	PANEL SCHEDULE RP1	171
E122	PANEL SCHEDULE CP1	172
E123	PANEL SCHEDULE SBP	173
E124	TYPICAL PANEL SCHEDULE BOOTH	174
E125	PANEL SCHEDULE PB-M1	175
E126	LIGHT FIXTURE SCHEDULE	176
E127	ELECTRICAL DUCT SECTIONS (1 OF 3)	177
E128	ELECTRICAL DUCT SECTIONS (2 OF 3)	178
E129	ELECTRICAL DUCT SECTIONS (3 OF 3)	179
E130	GATE DETAIL	180
E131	GATE DETAIL	181
09 ITS		
I101	ITS LEGEND, ABBREIVIATIONS, AND NOTES	182
I102	ITS OVERALL SITE PLAN	183
I103	ITS OVERALL SITE PLAN	184
I104	ITS UTILITY BUILDING FIRST FLOOR PLAN	185
I105	ITS UTILITY BUILDING SECOND FLOOR PLAN	186
I106	ITS GATES CONNECTIVITY DETAILS	187
I107	EACS ONE-LINE DIAGRAM AND SCHEDULE	188
I108	CCTV ONE-LINE DIAGRAM AND SCHEDULE	189
I109	TELECOM ONE-LINE DIAGRAM AND SCHEDULE	190
I110	ITS DETAILS	191
I111	CCTV CAMERA DETAILS	192
I112	ITS CABINET DETAILS	193
I113	CAMERA POLE & PHONE DETAILS	194
I114	TRUSS ELEVATION DETAIL	195
I115	READER & PLATE PEDESTAL BASE DETAIL	196
I116	READER POLE BASE DETAIL	197
I117	KEY PLAN	198
I118	TYPICAL EXIT LANE EQUIPMENT	199
I119	TYP ORT EQUIP @ GRADE	200
I120	TYP ORT OVERHEAD EQUIP	201
I121	TYPICAL PRECLASS EQUIP	202
I122	TYPICAL ENTRY LANE EQUIP	202A
I123	WB BACKGATE EQUIP	202B
I124	EB BACKGATE EQUIP	202C
I125	TYPICAL DETAILS	202D
I126	TYPICAL DETAILS	202E
I127	EXIT LANE CABLE SCHEDULE	202F
I128	WESTBOUND ORT CABLE SCHEDULE	202G
I129	EASTBOUND ORT CABLE SCHEDULE	202H
I130	ENTRY LANE CABLE SCHEDULE	202I
I131	TYPICAL BACKGATE CABLE SCHEDULE	202J
I132	AVI ANTENNA MOUNTING DETAIL PLAZA CANOPY	202K
I133	AVI ANTENNA MOUNTING DETAIL PLAZA GANTRY	202L
I134	DVAS CAMERA MOUNTING DETAIL PLAZA CANOPY	202M
I135	DVAS CAMERA MOUNTING DETAIL GANTRY	202N
I136	LIDAR MOUNTING DETAIL PLAZA CANOPY	202O
I137	LIDAR MOUNTING DETAIL GANTRY	202P
I138	VES CAMERA MOUNTING DETAIL PLAZA CANOPY	202Q
I139	VES CAMERA MOUNTING DETAIL GANTRY	202R
I140	ILLUMINATOR MOUNTING DETAIL GANTRY	202S

1

DESIGN AGENCY
PRIME AE
540 White Pond Drive, Ste. E
Akron, Ohio 44320
(330)-864-7755

NO.	REVISIONS	BY	DATE
1	ADDENDUM 2		5/12/2020

DESIGNED MWM | CHECKED MWM | IN CHARGE CAR
DRAWN MAK

DRAWINGS LIST

LUCAS COUNTY

TOLL PLAZA 49

PROJECT 58-20-01
DATE: 4/10/2020

G001

OHIO TURNPIKE AND INFRASTRUCTURE COMMISSION

OHIO TURNPIKE

TOLL PLAZA 49 5/13/2020 2:53:51 PM

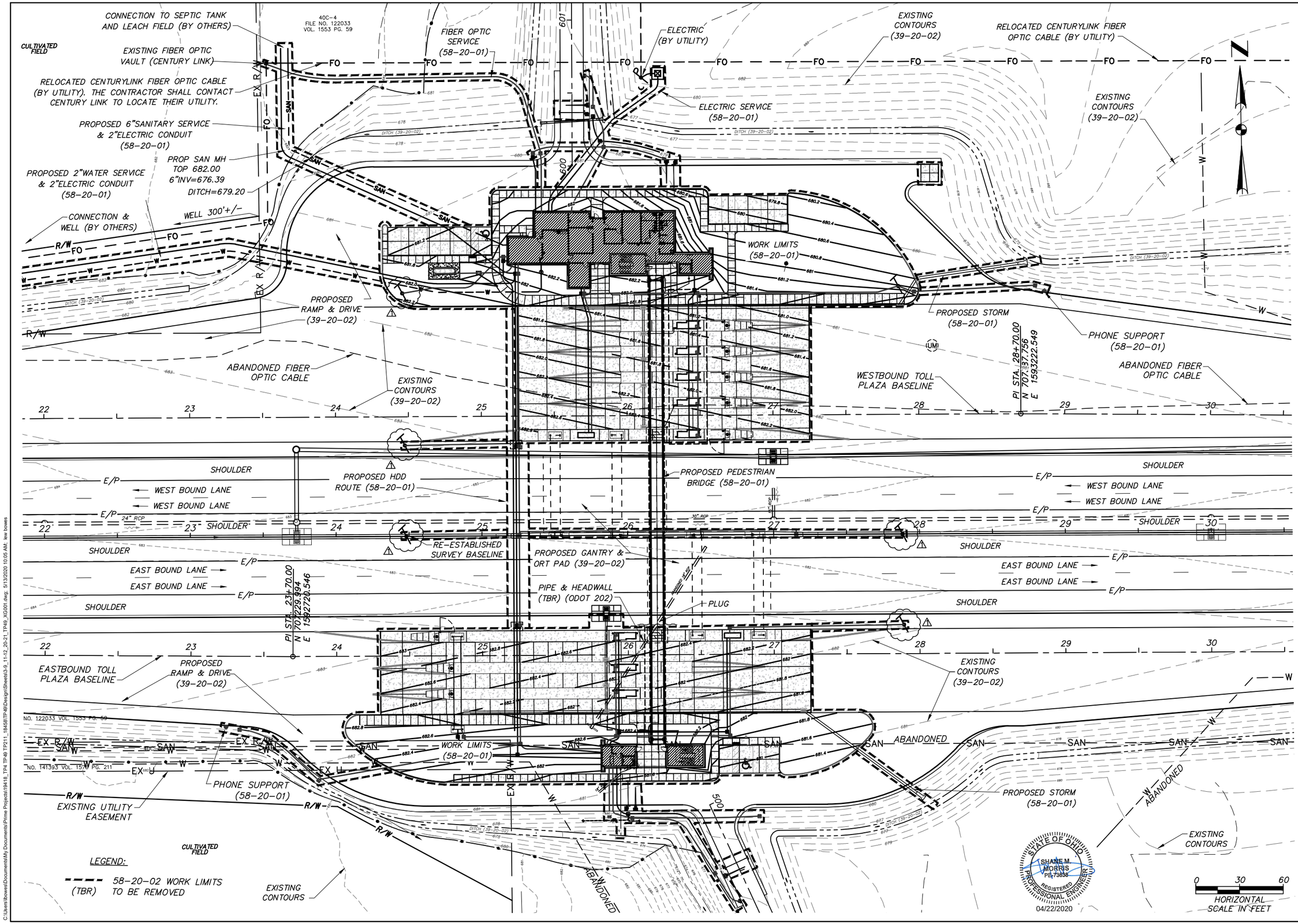

DESIGN AGENCY
PRIME AE
540 White Pond Drive, Ste E
Akron, Ohio 44320
(330)-864-7755

NO.	REVISIONS	BY	DATE
1	ADDENDUM NO.2	LHBJ	12MAY'20
-	-	-	-
-	-	-	-

DESIGNED	CHECKED	DRAWN	IN CHARGE
LHBJ	SMM	LHBJ	SMM

SITE PLAN – EXISTING CONDITIONS
TOLL PLAZA 49
LUCAS COUNTY

PROJECT 58-20-01
DATE: 4/17/2020

C103

15
202

OHIO TURNPIKE AND INFRASTRUCTURE COMMISSION

C:\Users\lbowes\Documents\My Documents\Prime Projects\19418_TP4_TP49 TP211_18458\TP-49\Design\Sheets\3-9_11-12_20-21_TP49_XG001.dwg; 5/13/2020 10:05 AM; lew bowes

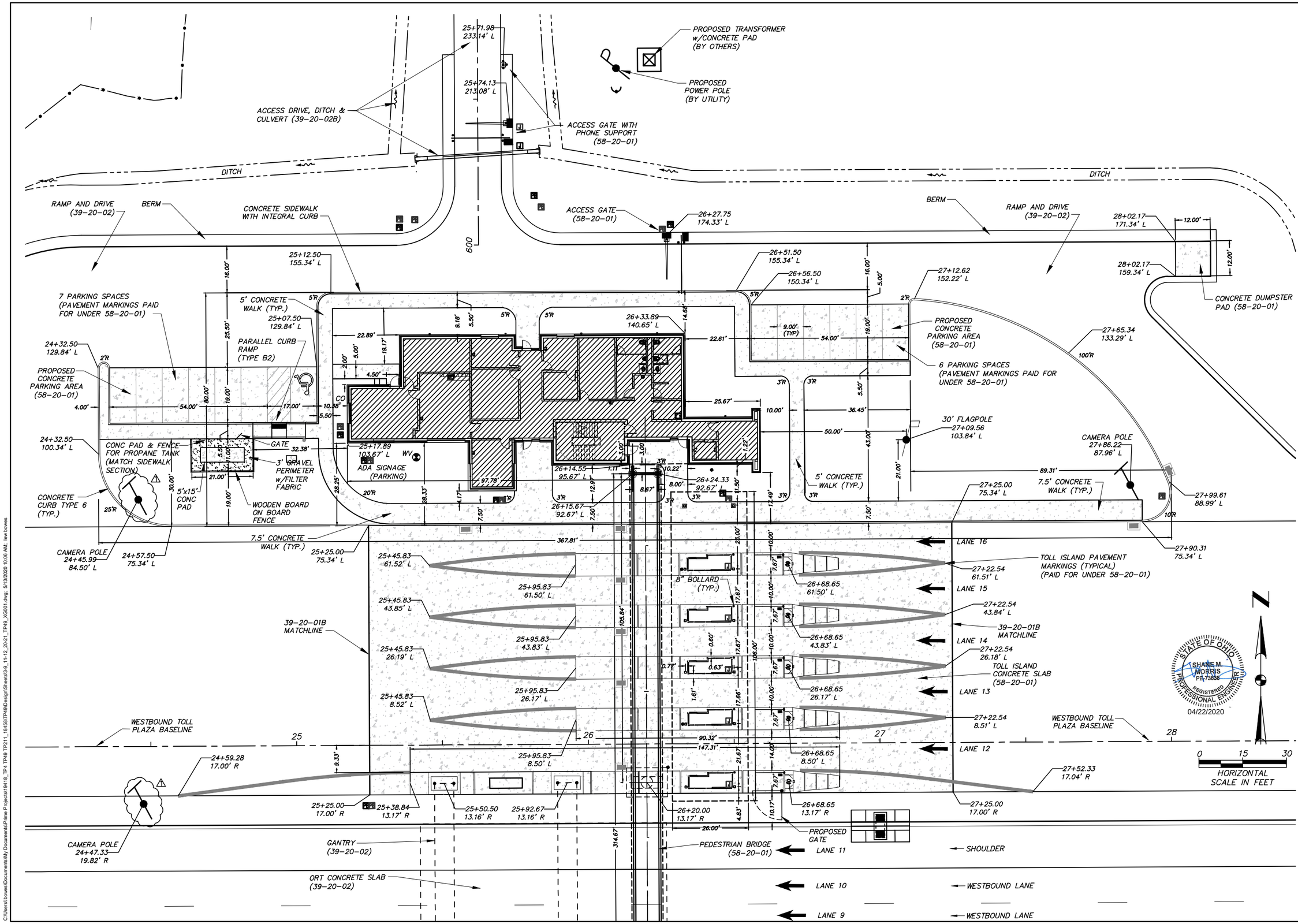

DESIGN AGENCY
PRIME AE
540 White Pond Drive, Ste. E
Akron, Ohio 44320
(330)-864-7755

NO.	REVISIONS	BY	DATE
1	ADDENDUM NO.2	LHBJ	12MAY20
-	-	-	-
-	-	-	-

DESIGNED	CHECKED
LHBJ	SMM
DRAWN	IN CHARGE
LHBJ	SMM

SITE DIMENSION PLAN – NORTH SITE

LUCAS COUNTY

TOLL PLAZA 49

PROJECT 58-20-01

DATE: 4/17/2020

C104

16 / 202

OHIO TURNPIKE AND INFRASTRUCTURE COMMISSION

C:\Users\lbowes\Documents\My Documents\Prime Projects\19418_TP4 TP49 TP211_18458\TP49\Design\Sheets\3-9_11-12_20-21_TP49_XG001.dwg, 5/13/2020 10:06 AM, lew bowes

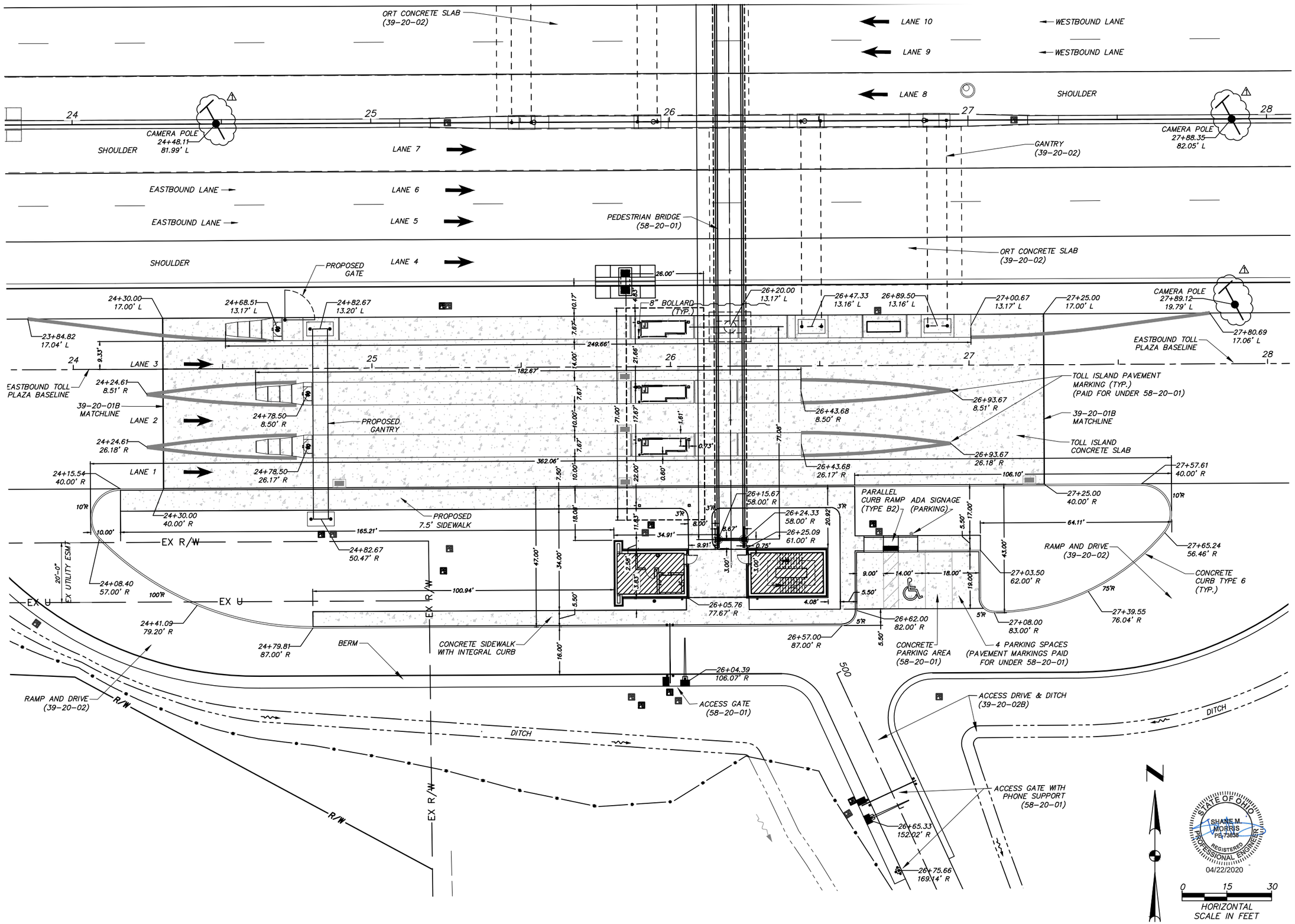

STATE OF OHIO
SHANE M. MORRIS
PE-73838
REGISTERED PROFESSIONAL ENGINEER
04/22/2020

DESIGN AGENCY
PRIME AE
540 White Pond Drive, Ste E
Akron, Ohio 44320
(330)-864-7755

NO.	REVISIONS	BY	DATE
1	ADDENDUM NO.2	LHBJ	12MAY20

DESIGNED	CHECKED	DRAWN	IN CHARGE
LHBJ	SMM	LHBJ	SMM

SITE DIMENSION PLAN – SOUTH SITE

LUCAS COUNTY

TOLL PLAZA 49

PROJECT 58-20-01

DATE: 4/17/2020

C105

17 / 202

OHIO TURNPIKE AND INFRASTRUCTURE COMMISSION

C:\Users\lbowes\Documents\My Documents\Prime Projects\19418_TP4 TP211_18458\TP49\Design\Sheets\3-9_11-12_20-21_TP49_XG001.dwg; 5/13/2020 10:06 AM; lew.bowes

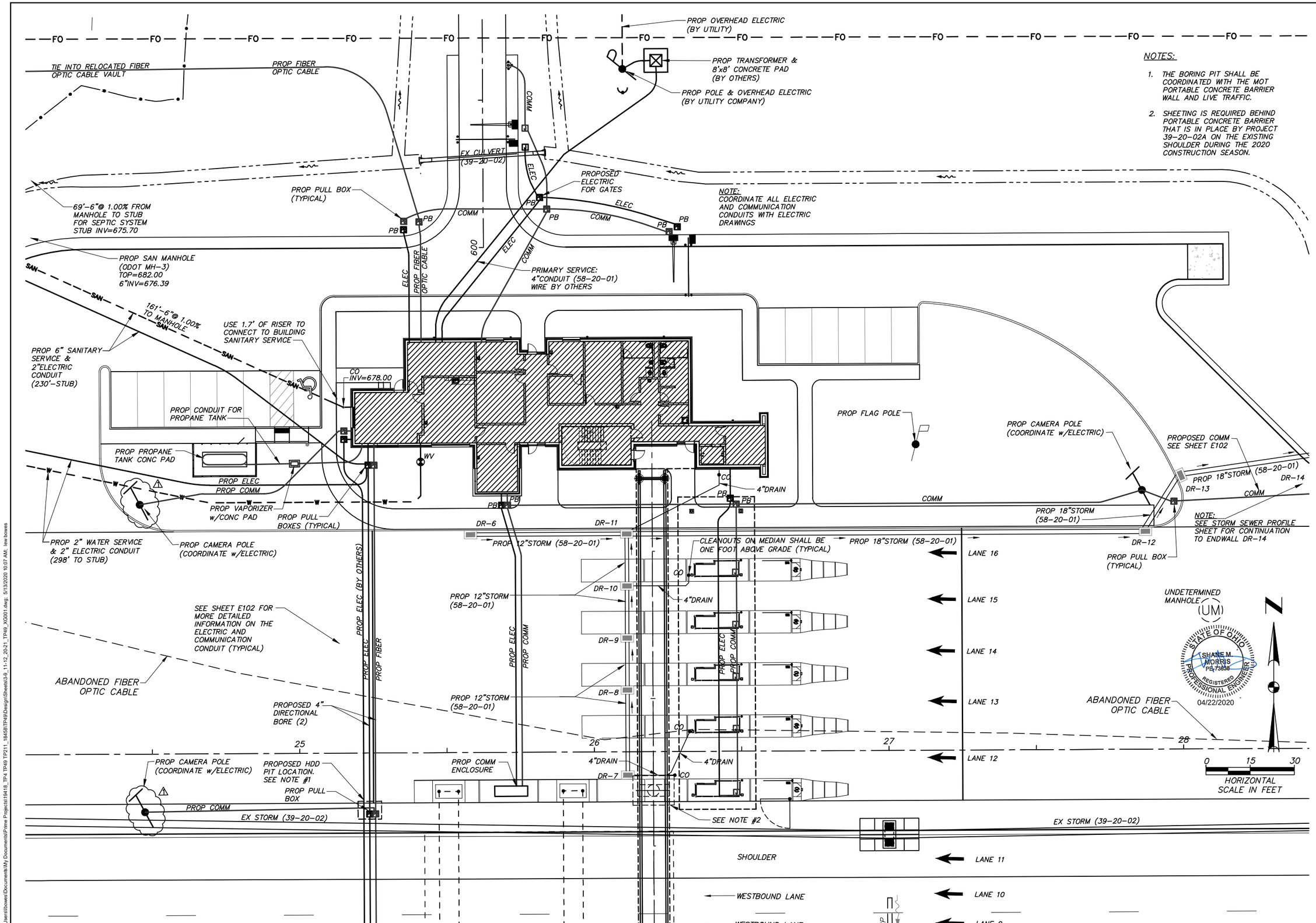

NOTES:

1. THE BORING PIT SHALL BE COORDINATED WITH THE MOT PORTABLE CONCRETE BARRIER WALL AND LIVE TRAFFIC.
2. SHEETING IS REQUIRED BEHIND PORTABLE CONCRETE BARRIER THAT IS IN PLACE BY PROJECT 39-20-02A ON THE EXISTING SHOULDER DURING THE 2020 CONSTRUCTION SEASON.

NOTE: COORDINATE ALL ELECTRIC AND COMMUNICATION CONDUITS WITH ELECTRIC DRAWINGS

NOTE: SEE STORM SEWER PROFILE SHEET FOR CONTINUATION TO ENDWALL DR-14

NO.	REVISIONS	BY	DATE
1	ADDENDUM NO.2	LHBJ	12MAY20

DESIGNED LHBJ | CHECKED SMM
DRAWN LHBJ | IN CHARGE SMM

DESIGN AGENCY
PRIME AE
540 White Pond Drive, Ste. E
Akron, Ohio 44320
(330)-864-7755

OHIO TURNPIKE

OHIO TURNPIKE AND INFRASTRUCTURE COMMISSION

SITE UTILITY PLAN – NORTH SITE

LUCAS COUNTY

TOLL PLAZA 49

PROJECT 58-20-01
DATE: 4/17/2020

C106

18
202

C:\Users\lbowes\Documents\My Documents\Prime Projects\19418_TP4 TP49 TP211_18458\TP49\Design\Sheets\3-9_11-12_20-21_TP49_XG001.dwg; 5/13/2020 10:07 AM; lew bowes

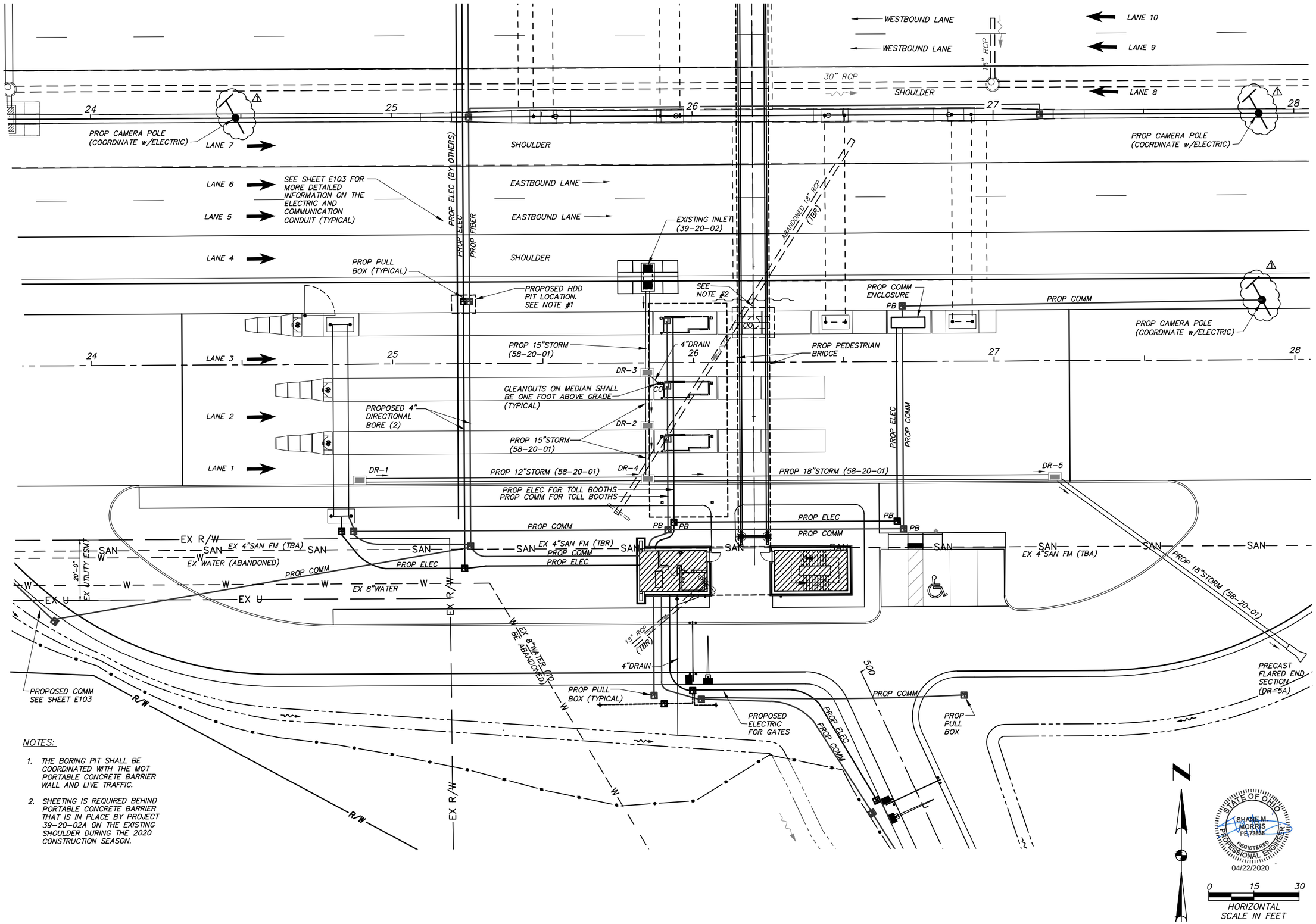

NOTES:

1. THE BORING PIT SHALL BE COORDINATED WITH THE MOT PORTABLE CONCRETE BARRIER WALL AND LIVE TRAFFIC.
2. SHEETING IS REQUIRED BEHIND PORTABLE CONCRETE BARRIER THAT IS IN PLACE BY PROJECT 39-20-02A ON THE EXISTING SHOULDER DURING THE 2020 CONSTRUCTION SEASON.

STATE OF OHIO
SHANE M. MORRIS
PE-73838
REGISTERED PROFESSIONAL ENGINEER
04/22/2020

DESIGN AGENCY
PRIME AE
540 White Pond Drive, Ste. E
Akron, Ohio 44320
(330)-864-7755

NO.	REVISIONS	BY	DATE
1	ADDENDUM NO.2	LHBJ	12MAY20
-	-	-	-
-	-	-	-

CHECKED	DESIGNED
SMM	LHBJ
IN CHARGE	DRAWN
SMM	LHBJ

SITE UTILITY PLAN – SOUTH SITE

TOLL PLAZA 49

LUCAS COUNTY

PROJECT 58-20-01

DATE: 4/17/2020

C107

19
202

OHIO TURNPIKE AND INFRASTRUCTURE COMMISSION

C:\Users\lbowes\Documents\My Documents\Prime Projects\19418_TP4 TP49 TP211_18458\TP49\Design\Sheets\3-9_11-12_20-21_TP49_XG001.dwg; 5/13/2020 10:08 AM; lew bowes

C:\Users\lbowes\Documents\My Documents\Prime Projects\19418_TP4 TP49 TP211_18458\TP49\Design\Sheets\3-9_11-12_20-21_TP49_XG001.dwg; 5/13/2020 10:08 AM; lew bowes

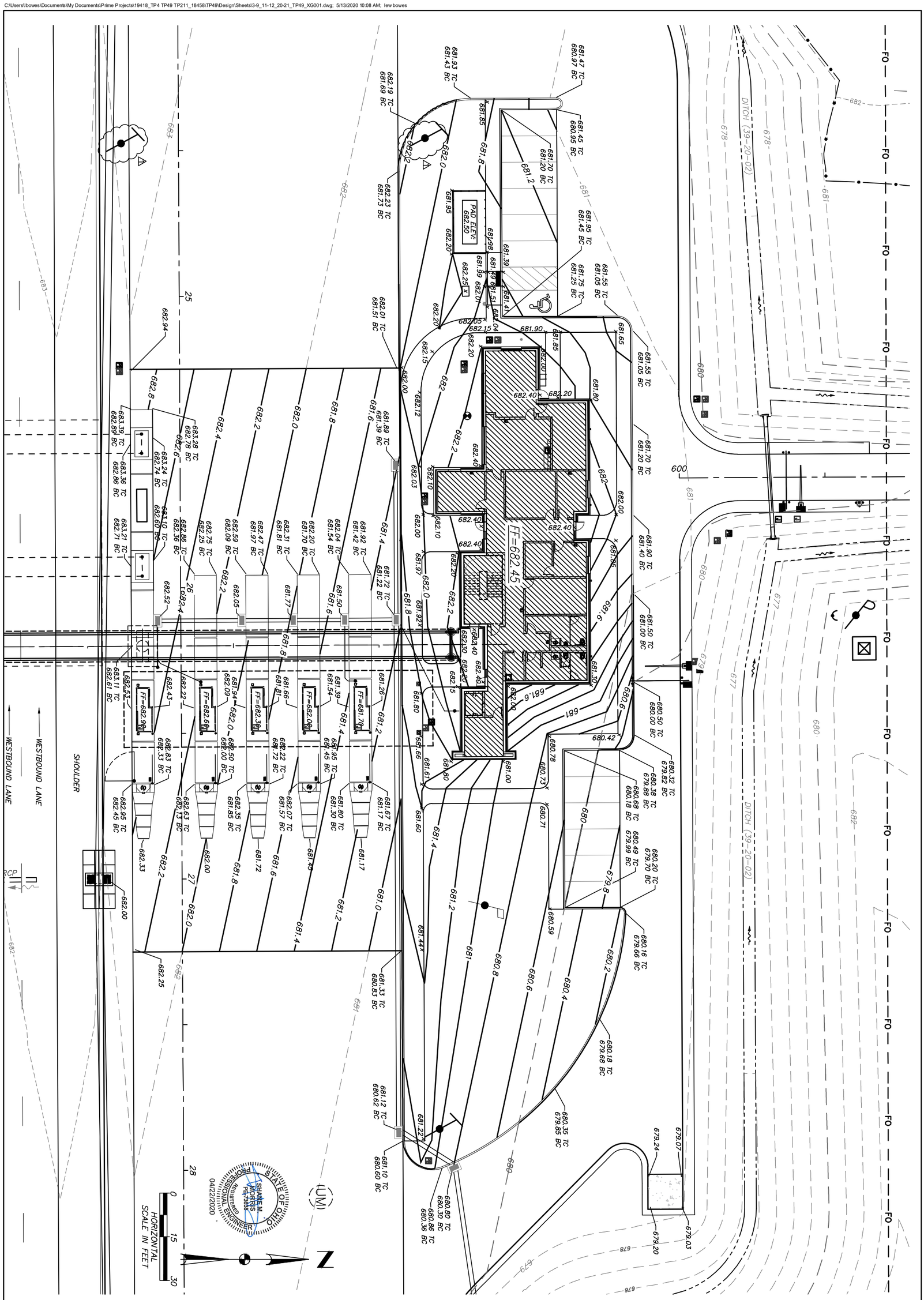

20 202	C108	PROJECT 58-20-01	SITE GRADING PLAN – NORTH SITE	DESIGNED LHBJ	CHECKED SMM	NO.	REVISIONS	BY	DATE	DESIGN AGENCY
		DATE: 4/17/2020	TOLL PLAZA 49 LUCAS COUNTY	DRAWN LHBJ	IN CHARGE SMM	1	ADDENDUM NO.2	LHBJ	12MAY20	PRIME AE 540 White Pond Drive, Ste. E Akron, Ohio 44320 (330)-864-7755

OHIO TURNPIKE

OHIO TURNPIKE AND INFRASTRUCTURE COMMISSION

OHIO TURNPIKE

C:\Users\lbowes\Documents\My Documents\Prime Projects\19418_TP4 TP49 TP211_18458\TP49\Design\Sheets\3-9_11-12_20-21_TP49_XG001.dwg, 5/13/2020 10:09 AM, lew bowes

DESIGN AGENCY
PRIME AE
540 White Pond Drive, Ste. E
Akron, Ohio 44320
(330)-864-7755

NO.	REVISIONS	BY	DATE
1	ADDENDUM NO.2	LHBJ	12MAY20
-	-	-	-
-	-	-	-

CHECKED	DESIGNED
SMM	LHBJ
IN CHARGE	DRAWN
SMM	LHBJ

SITE GRADING PLAN – SOUTH SITE

TOLL PLAZA 49

LUCAS COUNTY

PROJECT 58-20-01

DATE: 4/17/2020

C109

21
202

OHIO TURNPIKE AND INFRASTRUCTURE COMMISSION

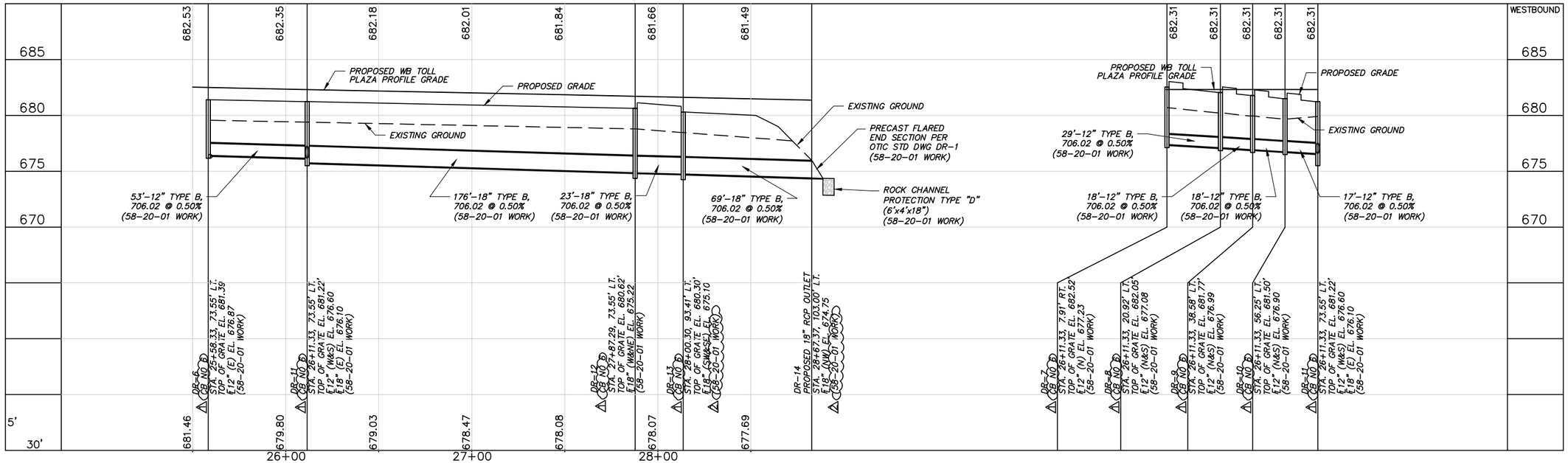

NORTH SITE

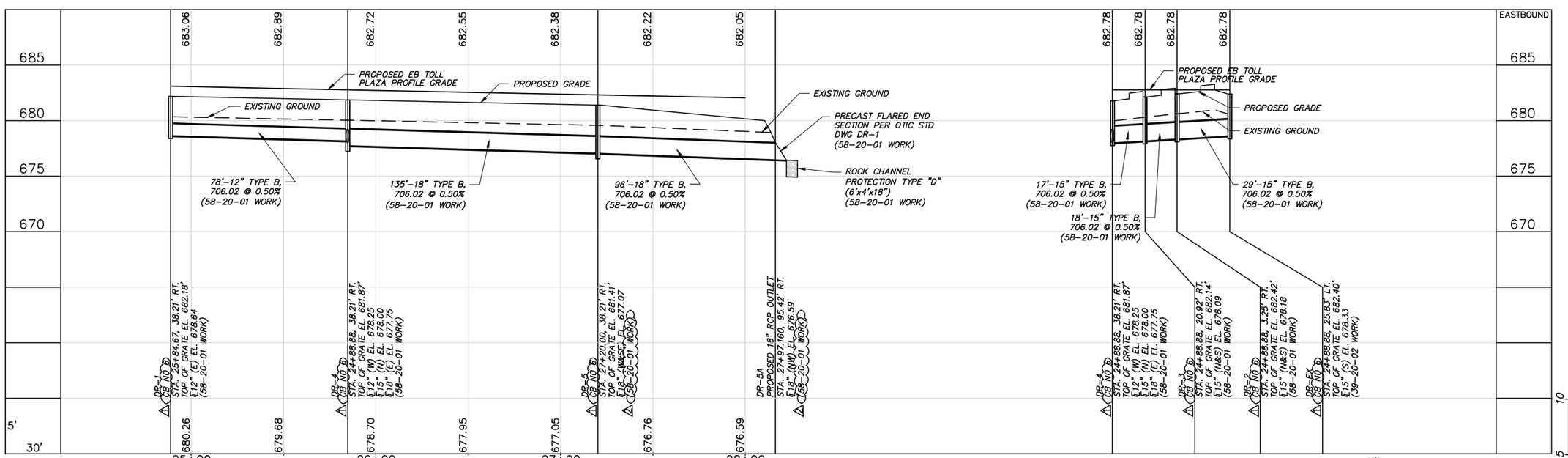

SOUTH SITE

VERTICAL SCALE IN FEET
0 5 10

HORIZONTAL SCALE IN FEET
0 30 60

STATE OF OHIO
SHANE M. MORRIS
PE-73836
REGISTERED PROFESSIONAL ENGINEER
04/22/2020

DESIGN AGENCY
PRIME AE
540 White Pond Drive, Ste. E
Akron, Ohio 44320
(330)-864-7755

NO.	REVISIONS	BY	DATE
1	ADDENDUM NO.1	LHBJ	07MAY20
2	ADDENDUM NO.2	LHBJ	12MAY20

DESIGNED	CHECKED
LHBJ	SMM
DRAWN	IN CHARGE
LHBJ	SMM

STORM SEWER PROFILES

LUCAS COUNTY

TOLL PLAZA 49

PROJECT 58-20-01

DATE: 4/17/2020

C110

22
202

OHIO TURNPIKE AND INFRASTRUCTURE COMMISSION

C:\Users\lbowes\Documents\My Documents\Prime Projects\19418_TP4 TP49 TP211_19458\TP49\Design\Sheets\1-2_10_TP49_BF01.dwg, 5/13/2020 10:35 AM, lew bowes

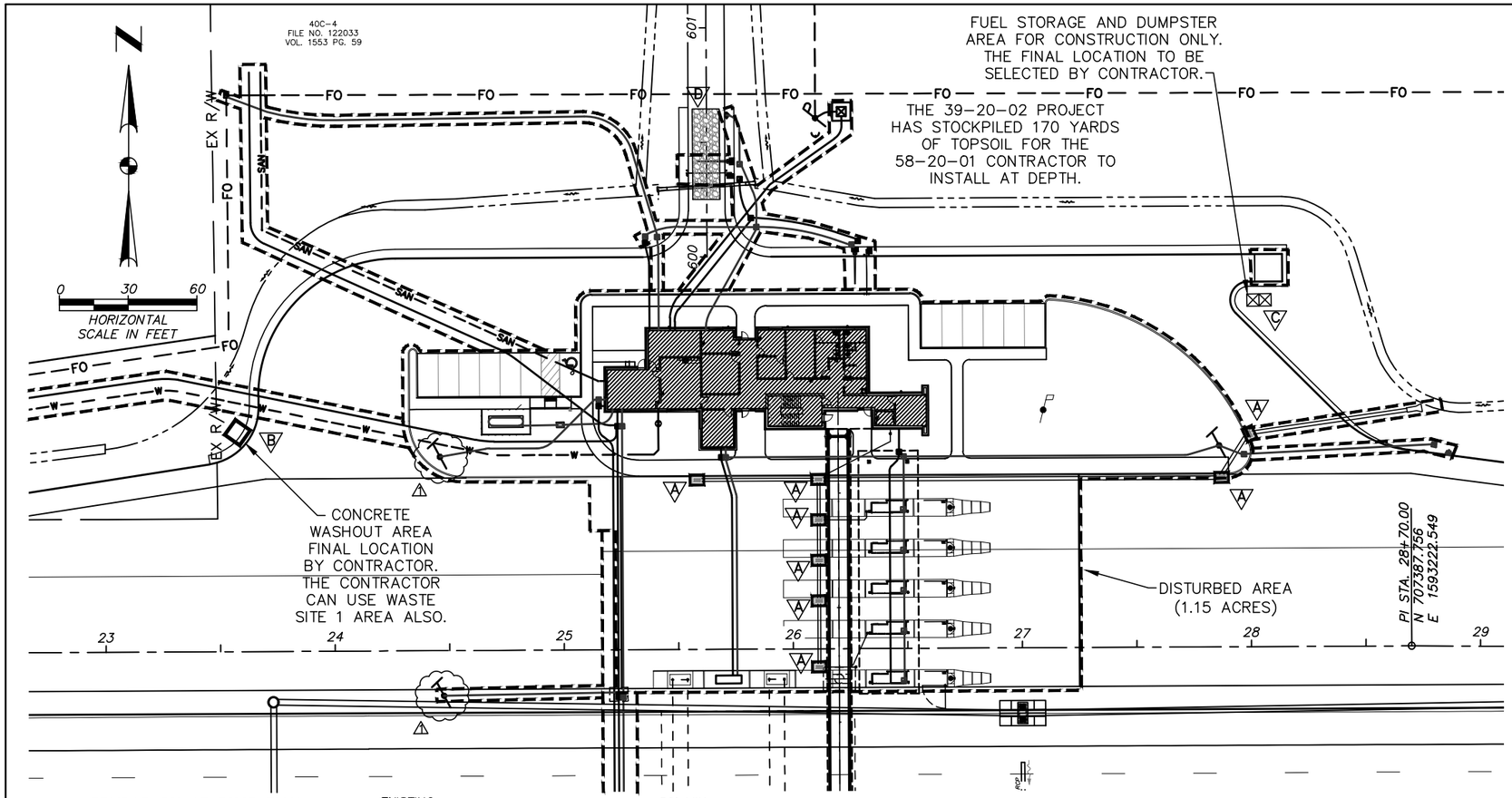

TEMPORARY STABILIZATION

AREAS REQUIRING TEMPORARY STABILIZATION	*TIME FRAME TO APPLY EROSION CONTROLS*
ANY AREAS WITHIN 50 FEET OF A STREAM AND NOT AT FINAL GRADE	WITHIN TWO DAYS OF THE MOST RECENT DISTURBANCE IF THE AREA WILL REMAIN IDLE FOR MORE THAN 14 DAYS
FOR ALL CONSTRUCTION ACTIVITIES, ANY DISTURBED AREAS THAT WILL BE DORMANT FOR MORE THAN 14 DAYS BUT LESS THAN ONE YEAR, AND NOT WITHIN 50 FEET OF A STREAM	WITHIN SEVEN DAYS OF THE MOST RECENT DISTURBANCE WITHIN THE AREA FOR RESIDENTIAL SUBDIVISIONS, DISTURBED AREAS MUST BE STABILIZED AT LEAST SEVEN DAYS PRIOR TO TRANSFER OF PERMIT COVERAGE FOR THE INDIVIDUAL LOT(S).
DISTURBED AREAS THAT WILL BE IDLE OVER WINTER	PRIOR TO THE ONSET OF WINTER WEATHER

PERMANENT STABILIZATION

AREAS REQUIRING PERMANENT STABILIZATION	*TIME FRAME TO APPLY EROSION CONTROLS*
ANY AREAS THAT WILL LIE DORMANT OF ONE YEAR OR MORE	WITHIN SEVEN DAYS OF THE MOST RECENT DISTURBANCE
ANY AREAS WITHIN 50 FEET OF A STREAM AND AT FINAL GRADE	WITHIN TWO DAYS OF REACHING FINAL GRADE
ANY OTHER AREAS AT FINAL GRADE	WITHIN SEVEN DAYS OF REACHING FINAL GRADE WITHIN THAT AREA

OHIO UTILITIES PROTECTION SERVICE
CALL BEFORE YOU DIG
800-362-2764 OR 8-1-1
WWW.OUPS.ORG

STATE OF OHIO
SHANE M. MORRIS
PE, 73858
REGISTERED PROFESSIONAL ENGINEER
04/22/2020

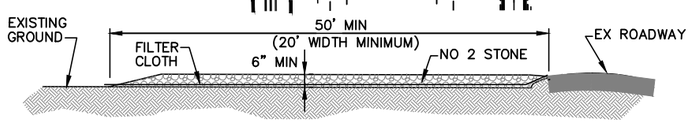

CONSTRUCTION ENTRANCE DETAIL (D)

NO SCALE

CONSTRUCTION SPECIFICATIONS

STONE SIZE– NO. 2 (2-1/2" TO 1-1/2") OR ITS EQUIVALENT.

LENGTH – AS EFFECTIVE, BUT NOT LESS THAN 50 FEET.

THICKNESS – NOT LESS THAN SIX (6) INCHES

WIDTH – TWENTY (20) FOOT MINIMUM, BUT NOT LESS THAN FULL WIDTH OF ALL POINTS OF INGRESS OR EGRESS.

FILTER CLOTH – WILL BE PLACED OVER THE ENTIRE AREA PRIOR TO PLACING THE STONE.

SURFACE WATER – ALL SURFACE WATER FLOWING OR DIVERTED TOWARD CONSTRUCTION ENTRANCES SHALL BE PIPED ACROSS THE ENTRANCE. IF PIPING IS IMPRACTICAL, A MOUNTABLE BERM WITH 5:1 SLOPES WILL BE PERMITTED.

MAINTENANCE – THE ENTRANCE SHALL BE MAINTAINED IN A CONDITION WHICH WILL PREVENT TRACKING OR FLOWING OF SEDIMENT ONTO PUBLIC RIGHT-OF-WAY. THIS MAY REQUIRE PERIODIC TOP DRESSING WITH ADDITIONAL STONE AS CONDITIONS DEMAND AND REPAIR AND/OR CLEAN-OUT OF ANY MEASURES USED TO TRAP SEDIMENT. ALL SEDIMENT SPILLED, DROPPED, WASHED OR TRACKED ONTO PUBLIC RIGHT-OF-WAY MUST BE REMOVED IMMEDIATELY.

WASHING – WHEN NECESSARY, WHEELS SHALL BE CLEANED TO REMOVE SEDIMENT PRIOR TO ENTRANCE ONTO PUBLIC RIGHT-OF-WAY. WHEN WASHING IS REQUIRED, IT SHALL BE DONE ON AN AREA STABILIZED WITH CRUSHED STONE WHICH DRAINS INTO AN APPROVED SEDIMENT TRAP. ALL SEDIMENT SHALL BE PREVENTED FROM ENTERING ANY STORM DRAIN, DITCH, OR WATERCOURSE THROUGH USE OF SAND BAGS, GRAVEL, BOARDS OR OTHER APPROVED METHODS.

PERIODIC INSPECTION AND NEEDED MAINTENANCE SHALL BE PROVIDED AFTER EACH RAIN EVENT.

SEDIMENT & SOIL EROSION LEGEND

- (A) : CATCH BASIN PROTECTION
- (B) : CONCRETE WASHOUT AREA
- (C) : FUEL STORAGE AND DUMPSTER
- (D) : CONSTRUCTION ENTRANCE DRIVE

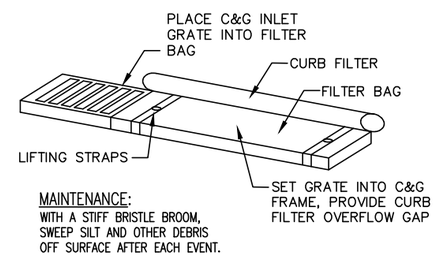

MAINTENANCE:
WITH A STIFF BRISTLE BROOM, SWEEP SILT AND OTHER DEBRIS OFF SURFACE AFTER EACH EVENT.

CURB INLET PROTECTION WITH GRATE (A)

NO SCALE

NOTE:
PER OEPA, THE CONTRACTOR MUST UTILIZE A LINER FOR THE CONCRETE WASHOUT AREA.

CONCRETE TRUCKS SHALL USE THESE AREAS TO WASHOUT TRUCKS. THE ACCUMULATED CONCRETE SHALL BE REMOVED FROM THE SITE AND DISPOSED OF PROPERLY.

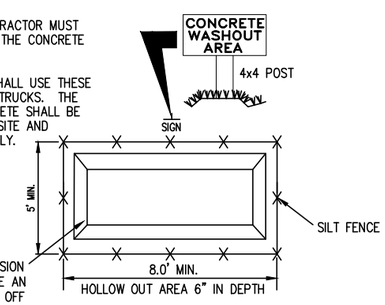

PLASTIC LINE DEPRESSION FOR REMOVAL OR USE AN ABOVE GROUND ROLL OFF BOX WITH LINER AS AN ALTERNATE.

CONCRETE WASHOUT AREA (B)

NO SCALE

SWPP GENERAL NOTES

CONTRACTOR RESPONSIBILITY: DETAILS HAVE BEEN PROVIDED ON THE PLANS IN AN EFFORT TO HELP THE CONTRACTOR PROVIDE EROSION AND SEDIMENTATION CONTROL. THE DETAILS SHOWN ON THE PLAN SHALL BE CONSIDERED A MINIMUM. ADDITIONAL OR ALTERNATE DETAILS MAY BE FOUND IN THE O.D.N.R. MANUAL 'RAINWATER AND LAND DEVELOPMENT.' THE CONTRACTOR SHALL BE SOLELY RESPONSIBLE FOR PROVIDING NECESSARY AND ADEQUATE MEASURES FOR PROPER CONTROL OF EROSION AND SEDIMENT RUNOFF FROM THE SITE ALONG WITH PROPERTY MAINTENANCE AND INSPECTION IN COMPLIANCE WITH NPDES GENERAL PERMIT FOR STORM WATER DISCHARGES ASSOCIATED WITH CONSTRUCTION ACTIVITY.

PRIOR TO CONSTRUCTION OPERATIONS IN A PARTICULAR AREA, ALL SEDIMENTATION AND EROSION CONTROL FEATURES SHALL BE IN PLACE. FIELD ADJUSTMENTS WITH RESPECT TO LOCATION AND DIMENSIONS MAY BE MADE BY THE ENGINEER.

THE CONTRACTOR SHALL PLACE INLET AND CHANNEL PROTECTION FOR EROSION CONTROL IMMEDIATELY AFTER CONSTRUCTION OF THE INLETS OR CHANNELS WHICH ARE NOT TRIBUTARY TO A SEDIMENT BASIN OR DAM.

IT MAY BECOME NECESSARY TO REMOVE PORTIONS OF THE BARRIER DURING CONSTRUCTION TO FACILITATE THE GRADING OPERATIONS IN CERTAIN AREAS. HOWEVER, THE BARRIER SHALL BE IN PLACE IN THE EVENING OR DURING ANY INCLEMENT WEATHER.

THE LIMITS OF SEEDING AND MULCHING ARE AS SHOWN WITHIN THE PLANS. THOSE AREAS DISTURBED OUTSIDE THE SEEDING LIMITS SHALL BE SEEDED AND MULCHED AT THE CONTRACTOR'S EXPENSE.

'TEMPORARY SEEDING' NO AREA FOR WHICH GRADING HAS BEEN COMPLETED OR WHERE A DENUDED AREA WILL REMAIN IDLE FOR MORE THAN 21 DAYS SHALL BE LEFT UNSEEDED FOR LONGER THAN 7 DAYS. IF PERMANENT SEED IS NOT APPLIED AT THIS TIME, TEMPORARY SEEDING SHALL BE DONE AT THE FOLLOWING RATES:

MARCH 1 TO NOVEMBER 15

SEED: OATS	2 LBS./1,000 S.F.
FERTILIZER: (12: 12:12)	25 LBS./1,000 S.F.
MULCH: (STRAW OR HAY)	2 TONS/ACRE

NOVEMBER 15 TO NOVEMBER 1:

SEED: ANNUAL RYE	2 LBS./1,000 S.F.
FERTILIZER: (12: 12:12)	25 LBS./1,000 S.F.
MULCH: (STRAW OR HAY)	2 TONS/ACRE

NOVEMBER 1 TO MARCH 1:

MULCH (ONLY): STRAW OR HAY	2 TONS/ACRE

"PERMANENT SEEDING" SHALL BE DONE BETWEEN MARCH 15 AND NOVEMBER 15. IF SEEDING IS DONE BETWEEN NOVEMBER 15 AND MARCH 15, IT SHALL BE CLASSIFIED AS 'TEMPORARY SEEDING.' PERMANENT SEED SHALL BE 40% KENTUCKY BLUEGRASS, 40% CREEPING RED FESCUE, 20% ANNUAL RYEGRASS. PERMANENT SEEDING SHALL CONSIST OF FERTILIZING, WATER AND SEEDING RATES INDICATED UNDER ITEM 659. SEEDING SHALL BE APPLIED WITHIN TWO (2) DAYS AFTER FINAL GRADING OR FOLLOWING SEED BED PREPARATION.

RATES OF APPLICATION OF ITEM 659:

SEED	4 LBS./1,000 S.F.
FERTILIZER: (12: 12: 12)	20 LBS./1,000 S.F.
MULCH: STRAW (HAY)	2 TONS/ACRE (3 TONS/ACRE)

MAINTENANCE: IT IS THE CONTRACTOR'S RESPONSIBILITY TO MAINTAIN THE SEDIMENT CONTROL FEATURES USED ON THIS PROJECT. THE SITE SHALL BE INSPECTED PERIODICALLY AND WITHIN 24 HOURS OF A SIGNIFICANT RAINFALL. RECORDS OF THESE INSPECTIONS SHALL BE KEPT AND MADE AVAILABLE TO JURISDICTIONAL AGENCIES IF REQUESTED. ANY SEDIMENT OR DEBRIS WHICH HAS REDUCED THE EFFICIENCY OF A STRUCTURE SHALL BE REMOVED IMMEDIATELY. SHOULD A STRUCTURE OR FEATURE BECOME DAMAGED, THE CONTRACTOR SHALL REPAIR OR REPLACE AT NO ADDITIONAL COST TO THE OWNER. NOT ALL DETAILS SHOWN ON THIS SHEET MAY BE REQUIRED FOR THIS PROJECT. REFERENCE SEDIMENT CONTROL PLAN.

THE COST FOR TEMPORARY CHANNELS, SEDIMENT DAMS, SEDIMENT BASINS, AND OTHER APPURTENANT EARTHMOVING OPERATIONS SHALL BE INCLUDED IN THE PRICE BID FOR EROSION AND SEDIMENTATION CONTROL QUANTITIES.

THE CONTRACTOR SHALL BE RESPONSIBLE TO ENSURE THAT OFF-SITE TRACKING OF SEDIMENTS BY VEHICLES AND EQUIPMENT IS MINIMIZED. ALL SUCH OFF-SITE SEDIMENT SHALL BE CLEANED UP DAILY. CONSTRUCTION OF STABILIZED CONSTRUCTION ENTRANCES ARE A PART OF THAT RESPONSIBILITY.

STREET CLEANING (ON AN AS-NEEDED BASIS) IS REQUIRED THROUGH THE DURATION OF THIS CONSTRUCTION PROJECT. THIS INCLUDES SWEEPING, POWER CLEANING AND (IF NECESSARY) MANUAL REMOVAL OF DIRT OR MUD IN THE STREET GUTTERS.

THE CONTRACTOR SHALL BE RESPONSIBLE TO ENSURE THAT NO SOLID OR LIQUID WASTE IS DISCHARGED INTO STORM WATER RUNOFF. SEDIMENT-LADEN WATER SHALL BE FILTERED THROUGH THE USE OF SEDIMENT FILTERING FENCES OR SEDIMENTATION BASINS PRIOR TO DISCHARGE TO SURFACE WATERS. CONCRETE TRUCKS WILL NOT BE ALLOWED TO WASH OUT OR DISCHARGE SURPLUS CONCRETE INTO OR ALONGSIDE RIVERS, STREAMS, AND CREEKS OR INTO NATURAL OR MAN-MADE CHANNELS OR SWALES LEADING THERETO. CONCRETE TRUCK WASH WATER AND SURPLUS CONCRETE SHALL BE CONFINED TO AREAS APPROVED BY THE ENGINEER; AFTER SOLIDIFYING, THESE WASTE MATERIALS SHALL BE REMOVED FROM THE SITE.

ALL EROSION AND SEDIMENT CONTROL PRACTICES ARE SUBJECT TO FIELD INSPECTIONS.

NOTE:

A COPY OF THE APPROVED EPA STORM WATER PERMIT WILL BE PROVIDED BY THE 39-20-02 CONTRACTOR. THIS WORK WILL BE INCLUDED WITHIN THAT EPA PERMIT.

THIS PLAN MUST BE POSTED ON-SITE. A COPY OF THE SWPP PLAN AND THE APPROVED EPA STORM WATER PERMIT (WITH THE SITE SPECIFIC NOI NUMBER, IF REQUIRED) SHALL BE KEPT ON-SITE AT ALL TIMES.

THE CONTRACTOR SHALL BE RESPONSIBLE FOR MAINTAINING ON-SITE DRAINAGE AT ALL TIMES DURING CONSTRUCTION. NO SEPARATE PAYMENT SHALL BE MADE FOR MAINTAINING DRAINAGE.

DESIGN AGENCY
PRIME AE
540 White Pond Drive, Ste E
Akron, Ohio 44320
(330)-864-7755

NO.	REVISIONS	BY	DATE
1	ADDENDUM NO.2	LHBJ	12MAY20
-	-	-	-
-	-	-	-

DESIGNED	CHECKED	DRAWN	IN CHARGE
LHBJ	SMM	LHBJ	SMM

LUCAS COUNTY

SWPPP – NORTH SITE

TOLL PLAZA 49

PROJECT 58-20-01
DATE: 4/17/2020

C120

32
202

OHIO TURNPIKE AND INFRASTRUCTURE COMMISSION

OHIO TURNPIKE

C:\Users\lbowers\Documents\My Documents\Prime Projects\19418_TP4 TP49 TP211_18458\TP49\Design\Sheets\3-9_11-12_20-21_TP49_XG001.dwg; 5/13/2020 10:09 AM; lew bowers

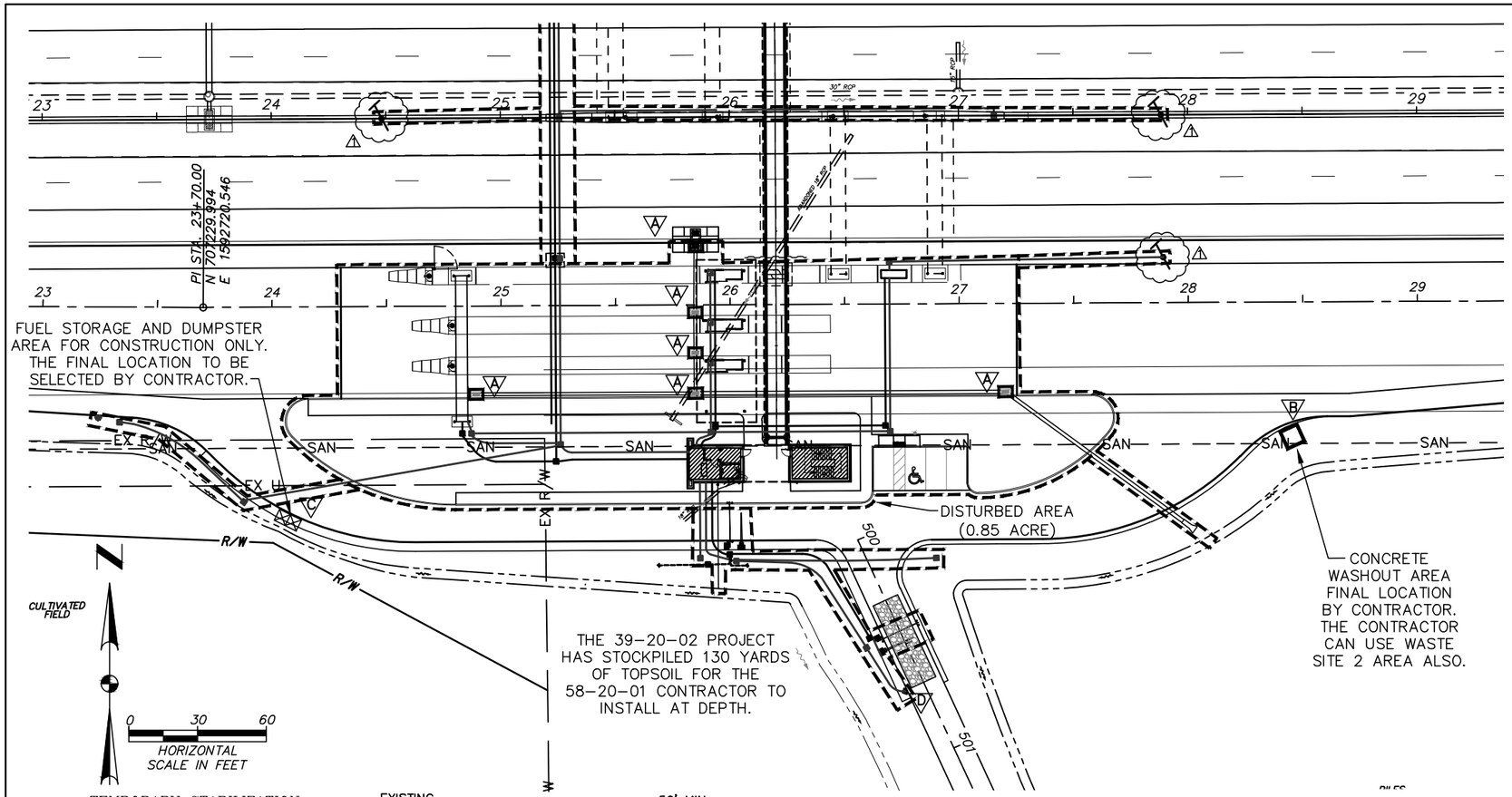

TEMPORARY STABILIZATION

AREAS REQUIRING TEMPORARY STABILIZATION	TIME FRAME TO APPLY EROSION CONTROLS
ANY AREAS WITHIN 50 FEET OF A STREAM AND NOT AT FINAL GRADE	WITHIN TWO DAYS OF THE MOST RECENT DISTURBANCE IF THE AREA WILL REMAIN IDLE FOR MORE THAN 14 DAYS
FOR ALL CONSTRUCTION ACTIVITIES, ANY DISTURBED AREAS THAT WILL BE DORMANT FOR MORE THAN 14 DAYS BUT LESS THAN ONE YEAR, AND NOT WITHIN 50 FEET OF A STREAM	WITHIN SEVEN DAYS OF THE MOST RECENT DISTURBANCE WITHIN THE AREA FOR RESIDENTIAL SUBDIVISIONS, DISTURBED AREAS MUST BE STABILIZED AT LEAST SEVEN DAYS PRIOR TO TRANSFER OF PERMIT COVERAGE FOR THE INDIVIDUAL LOT(S).
DISTURBED AREAS THAT WILL BE IDLE OVER WINTER	PRIOR TO THE ONSET OF WINTER WEATHER

PERMANENT STABILIZATION

AREAS REQUIRING PERMANENT STABILIZATION	TIME FRAME TO APPLY EROSION CONTROLS
ANY AREAS THAT WILL LIE DORMANT OF ONE YEAR OR MORE	WITHIN SEVEN DAYS OF THE MOST RECENT DISTURBANCE
ANY AREAS WITHIN 50 FEET OF A STREAM AND AT FINAL GRADE	WITHIN TWO DAYS OF REACHING FINAL GRADE
ANY OTHER AREAS AT FINAL GRADE	WITHIN SEVEN DAYS OF REACHING FINAL GRADE WITHIN THAT AREA

OHIO UTILITIES PROTECTION SERVICE
CALL BEFORE YOU DIG
800-362-2764 OR 8-1-1
WWW.OUPS.ORG

STATE OF OHIO
SHANE M. MORRIS
PE.73858
REGISTERED PROFESSIONAL ENGINEER
04/22/2020

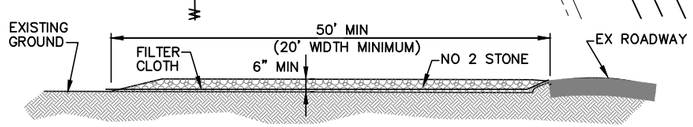

CONSTRUCTION ENTRANCE DETAIL (D)

NO SCALE

CONSTRUCTION SPECIFICATIONS

STONE SIZE– NO. 2 (2–1/2" TO 1–1/2") OR ITS EQUIVALENT.

LENGTH – AS EFFECTIVE, BUT NOT LESS THAN 50 FEET.

THICKNESS – NOT LESS THAN SIX (6) INCHES

WIDTH – TWENTY (20) FOOT MINIMUM, BUT NOT LESS THAN FULL WIDTH OF ALL POINTS OF INGRESS OR EGRESS.

FILTER CLOTH – WILL BE PLACED OVER THE ENTIRE AREA PRIOR TO PLACING THE STONE.

SURFACE WATER – ALL SURFACE WATER FLOWING OR DIVERTED TOWARD CONSTRUCTION ENTRANCES SHALL BE PIPED ACROSS THE ENTRANCE. IF PIPING IS IMPRACTICAL, A MOUNTABLE BERM WITH 5:1 SLOPES WILL BE PERMITTED.

MAINTENANCE – THE ENTRANCE SHALL BE MAINTAINED IN A CONDITION WHICH WILL PREVENT TRACKING OR FLOWING OF SEDIMENT ONTO PUBLIC RIGHT–OF–WAY. THIS MAY REQUIRE PERIODIC TOP DRESSING WITH ADDITIONAL STONE AS CONDITIONS DEMAND AND REPAIR AND/OR CLEAN–OUT OF ANY MEASURES USED TO TRAP SEDIMENT. ALL SEDIMENT SPILLED, DROPPED, WASHED OR TRACKED ONTO PUBLIC RIGHT–OF–WAY MUST BE REMOVED IMMEDIATELY.

WASHING – WHEN NECESSARY, WHEELS SHALL BE CLEANED TO REMOVE SEDIMENT PRIOR TO ENTRANCE ONTO PUBLIC RIGHT–OF–WAY. WHEN WASHING IS REQUIRED, IT SHALL BE DONE ON AN AREA STABILIZED WITH CRUSHED STONE WHICH DRAINS INTO AN APPROVED SEDIMENT TRAP. ALL SEDIMENT SHALL BE PREVENTED FROM ENTERING ANY STORM DRAIN, DITCH, OR WATERCOURSE THROUGH USE OF SAND BAGS, GRAVEL, BOARDS OR OTHER APPROVED METHODS.

PERIODIC INSPECTION AND NEEDED MAINTENANCE SHALL BE PROVIDED AFTER EACH RAIN EVENT.

SEDIMENT & SOIL EROSION LEGEND

- (A) : CATCH BASIN PROTECTION
- (B) : CONCRETE WASHOUT AREA
- (C) : FUEL STORAGE AND DUMPSTER
- (D) : CONSTRUCTION ENTRANCE DRIVE

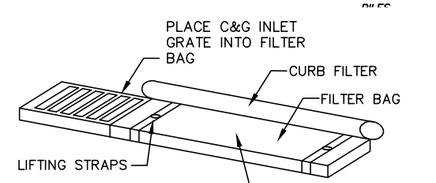

MAINTENANCE:
WITH A STIFF BRISTLE BROOM, SWEEP SILT AND OTHER DEBRIS OFF SURFACE AFTER EACH EVENT.

CURB INLET PROTECTION WITH GRATE (A)

NO SCALE

NOTE:
PER OEPA, THE CONTRACTOR MUST UTILIZE A LINER FOR THE CONCRETE WASHOUT AREA.

CONCRETE TRUCKS SHALL USE THESE AREAS TO WASHOUT TRUCKS. THE ACCUMULATED CONCRETE SHALL BE REMOVED FROM THE SITE AND DISPOSED OF PROPERLY.

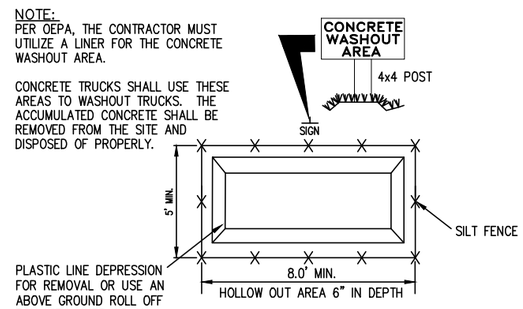

CONCRETE WASHOUT AREA (B)

NO SCALE

SWPP GENERAL NOTES

CONTRACTOR RESPONSIBILITY: DETAILS HAVE BEEN PROVIDED ON THE PLANS IN AN EFFORT TO HELP THE CONTRACTOR PROVIDE EROSION AND SEDIMENTATION CONTROL. THE DETAILS SHOWN ON THE PLAN SHALL BE CONSIDERED A MINIMUM. ADDITIONAL OR ALTERNATE DETAILS MAY BE FOUND IN THE O.D.N.R. MANUAL 'RAINWATER AND LAND DEVELOPMENT.' THE CONTRACTOR SHALL BE SOLELY RESPONSIBLE FOR PROVIDING NECESSARY AND ADEQUATE MEASURES FOR PROPER CONTROL OF EROSION AND SEDIMENT RUNOFF FROM THE SITE ALONG WITH PROPERTY MAINTENANCE AND INSPECTION IN COMPLIANCE WITH NPDES GENERAL PERMIT FOR STORM WATER DISCHARGES ASSOCIATED WITH CONSTRUCTION ACTIVITY.

PRIOR TO CONSTRUCTION OPERATIONS IN A PARTICULAR AREA, ALL SEDIMENTATION AND EROSION CONTROL FEATURES SHALL BE IN PLACE. FIELD ADJUSTMENTS WITH RESPECT TO LOCATION AND DIMENSIONS MAY BE MADE BY THE ENGINEER.

THE CONTRACTOR SHALL PLACE INLET AND CHANNEL PROTECTION FOR EROSION CONTROL IMMEDIATELY AFTER CONSTRUCTION OF THE INLETS OR CHANNELS WHICH ARE NOT TRIBUTARY TO A SEDIMENT BASIN OR DAM.

IT MAY BECOME NECESSARY TO REMOVE PORTIONS OF THE BARRIER DURING CONSTRUCTION TO FACILITATE THE GRADING OPERATIONS IN CERTAIN AREAS. HOWEVER, THE BARRIER SHALL BE IN PLACE IN THE EVENING OR DURING ANY INCLEMENT WEATHER.

THE LIMITS OF SEEDING AND MULCHING ARE AS SHOWN WITHIN THE PLANS. THOSE AREAS DISTURBED OUTSIDE THE SEEDING LIMITS SHALL BE SEEDED AND MULCHED AT THE CONTRACTOR'S EXPENSE.

'TEMPORARY SEEDING' NO AREA FOR WHICH GRADING HAS BEEN COMPLETED OR WHERE A DENUDED AREA WILL REMAIN IDLE FOR MORE THAN 21 DAYS SHALL BE LEFT UNSEEDED FOR LONGER THAN 7 DAYS. IF PERMANENT SEED IS NOT APPLIED AT THIS TIME, TEMPORARY SEEDING SHALL BE DONE AT THE FOLLOWING RATES:

MARCH 1 TO NOVEMBER 15

SEED: OATS	2 LBS./1,000 S.F.
FERTILIZER: (12: 12:12)	25 LBS./1,000 S.F.
MULCH: (STRAW OR HAY)	2 TONS/ACRE

NOVEMBER 15 TO NOVEMBER 1:

SEED: ANNUAL RYE	2 LBS./1,000 S.F.
FERTILIZER: (12: 12:12)	25 LBS./1,000 S.F.
MULCH: (STRAW OR HAY)	2 TONS/ACRE

NOVEMBER 1 TO MARCH 1:

MULCH (ONLY): STRAW OR HAY	2 TONS/ACRE

"PERMANENT SEEDING" SHALL BE DONE BETWEEN MARCH 15 AND NOVEMBER 15. IF SEEDING IS DONE BETWEEN NOVEMBER 15 AND MARCH 15, IT SHALL BE CLASSIFIED AS 'TEMPORARY SEEDING.' PERMANENT SEED SHALL BE 40% KENTUCKY BLUEGRASS, 40% CREEPING RED FESCUE, 20% ANNUAL RYEGRASS. PERMANENT SEEDING SHALL CONSIST OF FERTILIZING, WATER AND SEEDING RATES INDICATED UNDER ITEM 659. SEEDING SHALL BE APPLIED WITHIN TWO (2) DAYS AFTER FINAL GRADING OR FOLLOWING SEED BED PREPARATION.

RATES OF APPLICATION OF ITEM 659:

SEED	4 LBS./1,000 S.F.
FERTILIZER: (12: 12: 12)	20 LBS./1,000 S.F.
MULCH: STRAW (HAY)	2 TONS/ACRE (3 TONS/ACRE)

MAINTENANCE: IT IS THE CONTRACTOR'S RESPONSIBILITY TO MAINTAIN THE SEDIMENT CONTROL FEATURES USED ON THIS PROJECT. THE SITE SHALL BE INSPECTED PERIODICALLY AND WITHIN 24 HOURS OF A SIGNIFICANT RAINFALL. RECORDS OF THESE INSPECTIONS SHALL BE KEPT AND MADE AVAILABLE TO JURISDICTIONAL AGENCIES IF REQUESTED. ANY SEDIMENT OR DEBRIS WHICH HAS REDUCED THE EFFICIENCY OF A STRUCTURE SHALL BE REMOVED IMMEDIATELY. SHOULD A STRUCTURE OR FEATURE BECOME DAMAGED, THE CONTRACTOR SHALL REPAIR OR REPLACE AT NO ADDITIONAL COST TO THE OWNER. NOT ALL DETAILS SHOWN ON THIS SHEET MAY BE REQUIRED FOR THIS PROJECT. REFERENCE SEDIMENT CONTROL PLAN.

THE COST FOR TEMPORARY CHANNELS, SEDIMENT DAMS, SEDIMENT BASINS, AND OTHER APPURTENANT EARTHMOVING OPERATIONS SHALL BE INCLUDED IN THE PRICE BID FOR EROSION AND SEDIMENTATION CONTROL QUANTITIES.

THE CONTRACTOR SHALL BE RESPONSIBLE TO ENSURE THAT OFF–SITE TRACKING OF SEDIMENTS BY VEHICLES AND EQUIPMENT IS MINIMIZED. ALL SUCH OFF–SITE SEDIMENT SHALL BE CLEANED UP DAILY. CONSTRUCTION OF STABILIZED CONSTRUCTION ENTRANCES ARE A PART OF THAT RESPONSIBILITY.

STREET CLEANING (ON AN AS–NEEDED BASIS) IS REQUIRED THROUGH THE DURATION OF THIS CONSTRUCTION PROJECT. THIS INCLUDES SWEEPING, POWER CLEANING AND (IF NECESSARY) MANUAL REMOVAL OF DIRT OR MUD IN THE STREET GUTTERS.

THE CONTRACTOR SHALL BE RESPONSIBLE TO ENSURE THAT NO SOLID OR LIQUID WASTE IS DISCHARGED INTO STORM WATER RUNOFF. SEDIMENT–LADEN WATER SHALL BE FILTERED THROUGH THE USE OF SEDIMENT FILTERING FENCES OR SEDIMENTATION BASINS PRIOR TO DISCHARGE TO SURFACE WATERS. CONCRETE TRUCKS WILL NOT BE ALLOWED TO WASH OUT OR DISCHARGE SURPLUS CONCRETE INTO OR ALONGSIDE RIVERS, STREAMS, AND CREEKS OR INTO NATURAL OR MAN–MADE CHANNELS OR SWALES LEADING THERETO. CONCRETE TRUCK WASH WATER AND SURPLUS CONCRETE SHALL BE CONFINED TO AREAS APPROVED BY THE ENGINEER; AFTER SOLIDIFYING, THESE WASTE MATERIALS SHALL BE REMOVED FROM THE SITE.

ALL EROSION AND SEDIMENT CONTROL PRACTICES ARE SUBJECT TO FIELD INSPECTIONS.

NOTE:

A COPY OF THE APPROVED EPA STORM WATER PERMIT WILL BE PROVIDED BY THE 39–20–02 CONTRACTOR. THIS WORK WILL BE INCLUDED WITHIN THAT EPA PERMIT.

THIS PLAN MUST BE POSTED ON–SITE. A COPY OF THE SWPP PLAN AND THE APPROVED EPA STORM WATER PERMIT (WITH THE SITE SPECIFIC NOI NUMBER, IF REQUIRED) SHALL BE KEPT ON–SITE AT ALL TIMES.

THE CONTRACTOR SHALL BE RESPONSIBLE FOR MAINTAINING ON–SITE DRAINAGE AT ALL TIMES DURING CONSTRUCTION. NO SEPARATE PAYMENT SHALL BE MADE FOR MAINTAINING DRAINAGE.

DESIGN AGENCY
PRIME AE
540 White Pond Drive, Ste. E
Akron, Ohio 44320
(330)-864-7755

NO.	REVISIONS	BY	DATE
1	ADDENDUM NO.2	LHBJ	12MAY20
-	-	-	-
-	-	-	-

DESIGNED	CHECKED	DRAWN	IN CHARGE
LHBJ	SMM	LHBJ	SMM

LUCAS COUNTY
SWPP – SOUTH SITE
TOLL PLAZA 49

PROJECT 58-20-01
DATE: 4/17/2020

C121

33
202

OHIO TURNPIKE AND INFRASTRUCTURE COMMISSION

C:\Users\lbowes\Documents\My Documents\Prime Projects\19418_TP4 TP4 TP211_18458\TP49\Design\Sheets\3-9_11-12_20-21_TP49_XG001.dwg; 5/13/2020 10:10 AM; lew.bowes

VOID

VOID

VOID

VOID

LOCK PIN (AND CHAIN AT SHOULDER GATES ONLY), SEE REMOVABLE PIN DTL. THIS SHEET

CONCRETE PYLON

ST. STL. PIVOT, SEE NOTE BELOW

3/4" O ANCHOR BOLTS, 9" MIN. EMBEDMENT W/2" HOOK (HOT DIP GALVANIZED)

℄ PIVOT

LANE 6: 13'-0" / LANE 7: 14'-4" / SHOULDER GATE: 14'-0"

CUT BOTTOM ON TAPER OF 11" TO 8" WIDTH

PIVOT-1 1/2"X1 1/2"X17 1/2" LONG STAINLESS STEEL. MACHINE BOTTOM 2" AND TOP 4 1/2" TO 15/16" DIAMETER. WELD TO 3/16" STAINLESS STEEL BENT PLATE.

3/16" STAINLESS STL. BENT PLATE BOTTOM AND BOTH SIDES, WELD TO STAINLESS STL. PIVOT

GATE PIVOT ASSEMBLY, SEE DETAIL THIS SHEET

ELEVATION A
SCALE: 3/4"=1'-0"

NOTES:
SEE DETAIL THIS SHEET FOR GATE PIVOT ASSEMBLY DETAILS.

TYPICAL ALL GATE HARDWARE-GRIND ALL SHARP CORNERS TO A UNIFORM SMOOTH RADIUS REMOVING ALL SHARP BURRS AND EDGES. NON STAINLESS STEEL PARTS SHALL BE HOT DIP GALVANIZED AFTER FABRICATION, INCLUDING BOLTS.

PIPE CAP

REMOVABLE PIN. SEE DETAIL THIS SHEET

1 1/2" SCH. 40 STEEL PIPE

NON-SHRINK GROUT (SEE SPECS.)BETWEEN NIPPLE & SLEEVE

ISLAND SURFACE

2 1/2" I.D. STEEL PIPE SLEEVE

1 1/2" THREADED PIPE

REMOVABLE GATE OPEN POSITION TIE POST.

1 1/2" NIPPLE

ST. STL. PIVOT

3/16" ST. STL. BENT PLATE

WOOD GATE

GATE PIVOT ASSEMBLY

SECTION
SCALE: 3/4"=1'-0"

CONCRETE PYLON

GATE (CLOSED POSITION)

℄ ANCHOR BOLTS

7/8" LOCK PIN HOLES

PAINT EXPOSED PORTIONS OF THE INNER BEARING RACES WITH A ZINC RICH PRIMER

TOP PIVOT PLATE

TOP PIVOT PLATE

GATE STOP PLATE

THREADED ROD

PLUG WELD TO PLATE & GRIND SMOOTH PRIOR TO GALVANIZING (TYPICAL)

8" STEEL GATE MOUNTING PLATE

5/8" STOP LOCK ON TOP PLATE

PLATE

BOND PIVOT

BRONZE BEARING WASHER

BOTTOM PIVOT PLATE

BEARING TOP AND BOTTOM

ACORN STYLE NUT (TYPICAL)

MOUNTING PLATE ELEVATION

CONCRETE PYLONS

WOOD GATE IN CLOSED POSITION

REMOVABLE PIN SEE DETAIL

PROVIDE 7/8" DIA. HOLE IN L

L6x4x5/16 x6" LG LLH GALV. W/7/8" DIA. HOLE & (2) 5/8" DIA. HILTI KWIK BOLT W/ 4" EMBEDMENT (TYP. TOP & BOT)

SECTION
SCALE: 3/4"=1'-0"

ELEVATION B
SCALE: 3/4"=1'-0"

BALL BEARING

GATE

GATE PIVOT ASSEMBLY

SECTION
SCALE: 3/4"=1'-0"

REMOVABLE PIN. SEE DETAIL THIS SHEET

PIPE CAP

1 1/2" SCH. 40 STEEL PIPE

3/8" P WITH 7/8" HOLE FOR 5/8" PIN.

WOOD GATE

SECTION
SCALE: 3/4"=1'-0"

CHAIN (SEE SPECS.) FOR SHOULDER GATES ONLY

1-1/2" STAINLESS STEEL WASHER WELD TO PIN

5/8" STAINLESS STEEL ROD

NOTE:
PROVIDE 3 EXTRA PINS (19 TOTAL)

REMOVABLE PIN DETAIL
NOT TO SCALE

SEALMASTER VF-16 BEARING BELOW PLATE

MOUNTING PLATE

1 5/8"X1" STOP BLOCK

5/8" STEEL BOTTOM PIVOT PLATE

1 1/16"° BOTTOM GATE PIVOT HOLE

GATE STOP PLATE

1 5/8"X1" STOP BLOCK

℄ ANCHOR BOLTS

CONC. PYLON

℄ ANCHOR BOLTS

7/8" LOCK PIN HOLES

BOTTOM PIVOT PLATE

CONCRETE PYLON

GATE LOCATIONS

GATE IN CLOSED POSITION

CONCRETE PYLON

ELEVATION B

CONDITION AT ANCHOR TO PYLON

GATE AND OPERATOR AT EXIT LANES

℄ POST (ENTERING LANES ONLY)

ELEVATION A

END OF RAISED CENTER ON EXIT LANES

GATE IN CLOSED POSITION

PHOTO TOWER PAD

GATE POST SEE DETAIL A/A-2

ALIGN WITH PIVOT POINT ON ADJACENT LANE

GATE PIVOT ASSEMBLY (REVERSED)

SHOULDER GATE DETAIL
SCALE: NTS

SHOULDER GATE PIVOT ASSEMBLY (MIRROR IMAGE OF PYLON ASSEMBLIES)

GATE PIVOT ASSEMBLY BOLT TO ℄ ON PIPE

ADJUST HEIGHT TO MATCH ADJACENT GATE

1/2" STEEL PLATE (1/4" RADIUS ON ALL CORNERS)

GATE POST NOTES:

1. PROVIDE CONCRETE FOUNDATION AS SHOWN BELOW
2. CONT. WELD ALL JOINTS AND GRIND SMOOTH.
3. HOT DIP GALVANIZE AFTER FABRICATION
4. PRIME AND PAINT TO MATCH CANOPY COLUMNS.

ADJUST AS REQUIRED TO MATCH ADJACENT GATE

1/2" STEEL PLATE BRACKET AND PIPE CAP

1/2" STEEL PLATE BRACKET

6" DIA. EXTRA HEAVY STEEL PIPE (TYP.)

TOP OF PLATE AND @ ENTERING GATE

3'-6" MIN. TO BE DETERMINED IN FIELD

18" DIA. CONCRETE FOUNDATION @ SHOULDER GATE

1'-0" LONG X 1" DIA. PIN THRU PIPE

3" MIN.

SHOULDER GATE MOUNTING POST DETAIL
SCALE: 3/4"=1'-0"

TOP PIVOT PLATE

℄ ANCHOR BOLT

1 5/8" THICK x 1" WIDE STOP BLOCK OPPOSITE SIDE

3/8" STEEL GATE STOP PLATE

CONCRETE PYLON

MOUNTING PLATE

BOTTOM PIVOT PLATE

GATE (OPEN POSITION)

GATE

℄ ANCHOR BOLT

1/4" BRONZE BRG. WASHER

BEARING TOP AND BOTTOM

GATE STOP PLATE ELEVATION

GATE PIVOT ASSEMBLY DETAILS

WITH A ZINC RICH PRIMER.

1

5/12/2020 4:53:54 PM

TOLL PLAZA 49

NO.	REVISIONS	BY	DATE
1	ADDENDUM 2		5/12/2020

DESIGNED MWM | CHECKED MWM | DRAWN MAK | IN CHARGE CAR

DESIGN AGENCY
PRIME AE
540 White Pond Drive, Ste. E
Akron, Ohio 44320
(330)-864-7755

OHIO TURNPIKE

OHIO TURNPIKE AND INFRASTRUCTURE COMMISSION

~~TOLL BOOTH GATE DETAILS~~

LUCAS COUNTY

TOLL PLAZA 49

PROJECT 58-20-01

DATE: 4/10/2020

A410

OHIO TURNPIKE

GENERAL NOTES

1. ALL MECHANICAL EQUIPMENT LOCATIONS SHOWN ARE APPROXIMATE. SEE MECHANICAL PLANS FOR EXACT LOCATIONS OF EQUIPMENT. ALL FUSING SHALL BE BASED ON FINAL NAMEPLATE VALUES AS DELIVERED TO THE JOB SITE.
2. COORDINATE ALL WIRING DEVICES AND LIGHT FIXTURE LOCATIONS WITH ARCHITECTURAL ELEVATIONS, REFLECTED CEILING PLANS & MECHANICAL EQUIPMENT. LOCATIONS SHOWN ARE APPROXIMATE AND MAY REQUIRE MINOR ADJUSTMENT IN THE FIELD TO SATISFY THEDESIGN INTENT.
3. ALL MOUNTED HEIGHTS INDICATED ARE ABOVE FINISHED FLOOR U.O.N.
4. ALL CONDUIT FOR TELEPHONE, RADIO & COMPUTER SYSTEMS SHALL BE 1" UNLESS OTHERWISE NOTED EACH CABLE RUN FROM A RADIO TELEPHONE OR SPEAKER OUTLET LOCATION TO THE RECORDING ROOM SHALL BE IN A SEPARATE CONDUIT. COORDINATE ALL NEW CONDUIT RUNS WITH ALL OTHER TRADES AND COMMUNICATIONS CONTRACTOR.
5. DAMAGE TO EXISTING FACILITIES (UNDERGROUND PIPING, CONDUIT, SIDEWALKS PARKING LOT, ETC) WILL BE REPAIRED BY THE CONTRACTOR AT NO EXPENSE TO OHIO TURNPIKE AND INFRASTRUCTURE COMMISSION.
6. TELEPHONE CABLE INSTALLATION: THE CONTRACTOR SHALL BE RESPONSIBLE FOR THE INSTALLATION OF ALL TELEPHONE CABLES AND RELATED HARDWARE.
7. ANY TEMPORARY ELECTRICAL SERVICE SHALL MEET THE REQUIREMENTS OF THE NATIONAL ELECTRICAL CODE.
8. DO NOT SCALE OFF THESE DRAWINGS. THE LOCATIONS SHOWN ON THESE PLANS ARE APPROXIMATE AND REQUIRE COORDINATION WITH ALL OTHER TRADES AND VERIFICATION OF EXISTING CONDITIONS. ROUTING OF CONDUIT IS DIAGRAMMATIC IN NATURE AND NOT INTENDED TO SHOW ALL REQUIRED OFFSETS AND DETAILS.
9. ALL FLOOR PENETRATIONS AND FIRE WALL PENETRATIONS SHALL BE FIRE-SEALED WITH METHODS AND MATERIALS APPROVED BY U.L. FOR PARTICULAR SYSTEM, OF FIRE-RESISTANCE USED.
10. METAL FASCIA SHALL BE BONDED AND GROUPED TO COMPLY WITH THE OHIO BUILDING CODE.
11. ALL ELECTRICAL WORK SHALL COMPLY WITH THE REQUIREMENTS OF ARTICLE 27 OF THE OHIO BUILDING CODE, AND THE NEC-NFPA 70 AND IS SUBJECT TO THE APPROVAL OF THE STATE ELECTRICAL INSPECTOR ASSIGNED BY THE DIVISION OF FACTORY AND BUILDING INSPECTION.
15. ALL EXPOSED EXTERIOR PULL AND JUNCATION BOXES SHALL BE STAINLESS STEEL OR NON-METALLIC.

LIGHTING LEGEND

	LED LIGHTING - SEE SHEET E-126 FOR LIGHTING FIXTURE SCHEDULE. (1)	
	EMERGENCY BATTERY TYPE LIGHTING FIXTURE, WALL MOUNT AT 7'-6" A.F.F. UNLESS NOTED OTHERWISE.	
$	FLUSH MTD SINGLE POLE TOGGLE SWITCH	48"
$3	FLUSH MTD 3-WAY TOGGLE SWITCH	48"
PC	PHOTO CELL	
LC	LIGHTING CONTRACTOR	
	EXIT SIGN, 'X1' CEILING MOUNTED, AT 7'-6" A.F.F. OR 'X' (WALL MOUNTED) AT 7'-6" A.F.F.	
	EXIT SIGN, AS ABOVE WITH DIRECTIONAL ARROWS.	
$R	WALL CONTROL SWITCH FOR REMOTE SENSORS	
OS1	SUSPENDED CEILING MOUNTED OCCUPANCY SENSOR	
OS2	OPEN CEILING MOUNTED OCCUPANCY SENSOR	

ELECTRICAL ABBREVIATIONS

ACU	AIR CONDITIONING UNIT	GLS	GATE LIMIT SWITCH
ACCU	AIR COOLED CONDENSING UNIT	LP	LIGHTING PANEL
ACT	AUTMATIC COUNTING TREADLE	MDP	MAIN DISTRIBUTION PANEL
AFF	ABOVE FINSHED FLOOR	MH	MOUNTING HEIGHT
AL	AXLE LIGHT	MT	MOUNT
ATD	AUTOMATIC TICKET DISPENSER	MTG	MOUNTING
ATS	AUTOMATIC TRANSFER SWITCH	NB	NORTH BUILDING
AWS	AXLE WEIGHTING SCALE	P	POWER FOR TOLL COLLECTION EQUIPMENT
BP	BY-PASS ISOLATION	PNL	PANEL
CKT	CIRCUIT	RL	RAIN LEADER
CP	COMMUNICATIONS PANEL	SA	SUPPLY AIR
DWG	DRAWING	SB	SOUTH BUILDING
EC	EMPTY CONDUIT	TC	TOLL COLLECTION CONDUIT (EMPTY)
EF	EXHAUST FAN	TTB	TELEPHONE TERMINAL BOARD
EWC	ELECTRIC WATER COOLER	UON	UNLESS OTHERWISE NOTED
FAA	FIRE ALARM ANNUNCIATOR	WP	WEATHERPROOF
HOA	HAND-OFF-AUTOMATIC	XFMR	TRANSFORMER
		SPD	SURGE PROTECTION DEVICE

FIRE ALARM LEGEND

DSD	DUCT SMOKE DETECTOR AND SAMPLE TUBE.
SD	SMOKE DETECTOR
HD	HEAT DETECTOR
RI	LED REMOTE INDICATOR
F	HORN/STROBE UNIT. MOUNT AT 80" ABOVE FLOOR OR 6" BELOW CEILING, WHICHEVER IS LOWER UNLESS NOTED OTHERWISE. 75 CANDELA UNLESS NOTED OTHERWISE. "LD" INDICATES LOW DECIBEL. RECESSED.
F	STROBE ONLY UNIT. MOUNT AT 80" ABOVE FLOOR OR 6" BELOW CEILING WHICHEVER IS LOWER UNLESS NOTED OTHERWISE. 75 CANDELA UNLESS NOTED OTHERWISE. RECESSED.
R	ADDRESSABLE RELAY
F	HORN/STROBE UNIT. SURFACE CEILING MOUNTED. 115 CANDELA.
F	FIRE ALARM MANUAL PULL STATION
K	RECESSED "KNOX" BOX
RAP	REMOTE ANNUNCIATOR PANEL WITH KEYED FACP RESET. RECESSED. (DUCT SMOKE DETECTORS SHALL BE ABLE TO BE RESET FROM "RAP").
FACP	FIRE ALARM CONTROL PANEL
FATC	FIRE ALARM TERMINAL CABINET
F	RED FIRE ALARM BEACON
M	MASTER BOX
FR	FAN RELAY

ELECTRICAL LEGEND

SYMBOL	DESCRIPTION	MOUNTING HEIGHT
PB	(1) PULL BOX	
WP GF	DUPLEX RECEPTACLE 20A, 125V. - 'WP' INDICATES WEATHER PROOF; GF INDICATES GROUND FAULT INTERRUPTER TYPE.	
GFI	GROUND FAULT INTERRUPTER TYPE DUPLEX RECEPTACLE 20A, 125V. 'AC' INDICATES MOUNTED 'ABOVE COUNTER'.	45"
W	TELECOMMUNICATIONS OUTLET WITH 1" EMPTY CONDUIT TO TELECOMMUNICATIONS EQUIPMENT.	18"/48"
	MICROWAVE TELEPHONE OUTLET	48"
W	RADIO TELEPHONE OUTLET	48"
R	WALL OUTLET FOR RADIO SYSTEM SPEAKER	7'-6"
	PUSHBUTTON FOR DOORBELL	48"
	MOTOR CONNECTION REFER TO MECH. DWG'S FOR DETAILS	
	DISCONNECT SWITCH-FUSED TYPE, AND NON-FUSED TYPE, AS NOTED.	48"
	PANELBOARD SURAFCE MOUNTED & RECESSED	6'-6" TO TOP
	COMMUNICATIONS EQUIPMENT BACKBOARD	
	CONDUIT IN OR ABOVE CEILING OR WALL (NO. OF TICKS INDICATE NO. OF CONDUCTORS 2#12+1#12 GRD. IN 3/4" CONDUIT, UNLESS OTHERWISE NOTED	
	HOMERUN TO PANEL, ARROW INDICATES NO. OF CIRCUITS (NO. OF TICKS INDICATE NO. OF CONDUCTORS 2#12+1#12 GRD. IN 3/4" CONDUIT, UNLESS OTHERWISE NOTED	
SPD	SURGE PROTECTION DEVICE	
	CONDUIT IN OR UNDER FLOOR	
E	UNDERGROUND ELEC CONDUIT/DUCTBANK	
C	UNDERGROUND COMMUNICATIONS CONDUIT/DUCTBANK	
	CLOCK RECEPTACLE	7'-0"
C	COMPUTER SYSTEM OUTLET (PROVIDE BLANK COVER PLATE)	18"
T	THERMOSTAT (BY MECHANICAL)	
	DOORBELL	
J	JUNCTION BOX	
PC	PHOTO-CELL	
2	SEE DRAWING NOTE OF SAME NUMBER	
S S	MAGNETIC MOTOR STARTER-COMBINATION DISCONNECT TYPE	48"
	20AMP-(125VOLT SURGE SUPPRESSING TYPE) DUPLEX RECEPTACLE	18"
$M	MANUAL MOTOR STARTER WITH INTEGRAL THERMAL OVERLOAD PROTECTION ('P' INDICATES WITH "PILOT LIGHT")	48" (IF WALL MTD)
	GROUNDING ELECTRODE	
	GROUNDING ELECTRODE TRIAD	
	GROUND TEST WELL (SEE DETAIL	
	SPECIAL PURPOSE OUTLET AS NOTED ON DRAWINGS	

DESIGN AGENCY
PRIME AE
540 White Pond Drive, Ste. E
Akron, Ohio 44320
(330)-864-7755

NO.	REVISIONS	BY	DATE
1	ADDENDUM No.2	CK	5/12/20

DESIGNED	CHECKED	IN CHARGE
RNS	CEK	CEK
DRAWN		
RNS		

LUCAS COUNTY

ELECTRICAL LEGEND

TOLL PLAZA 49

PROJECT 58-20-01
DATE: 04/22/2020

E101

151
202

OHIO TURNPIKE AND INFRASTRUCTURE COMMISSION

OHIO TURNPIKE

5/12/2020 2:17:37 PM

Project Name

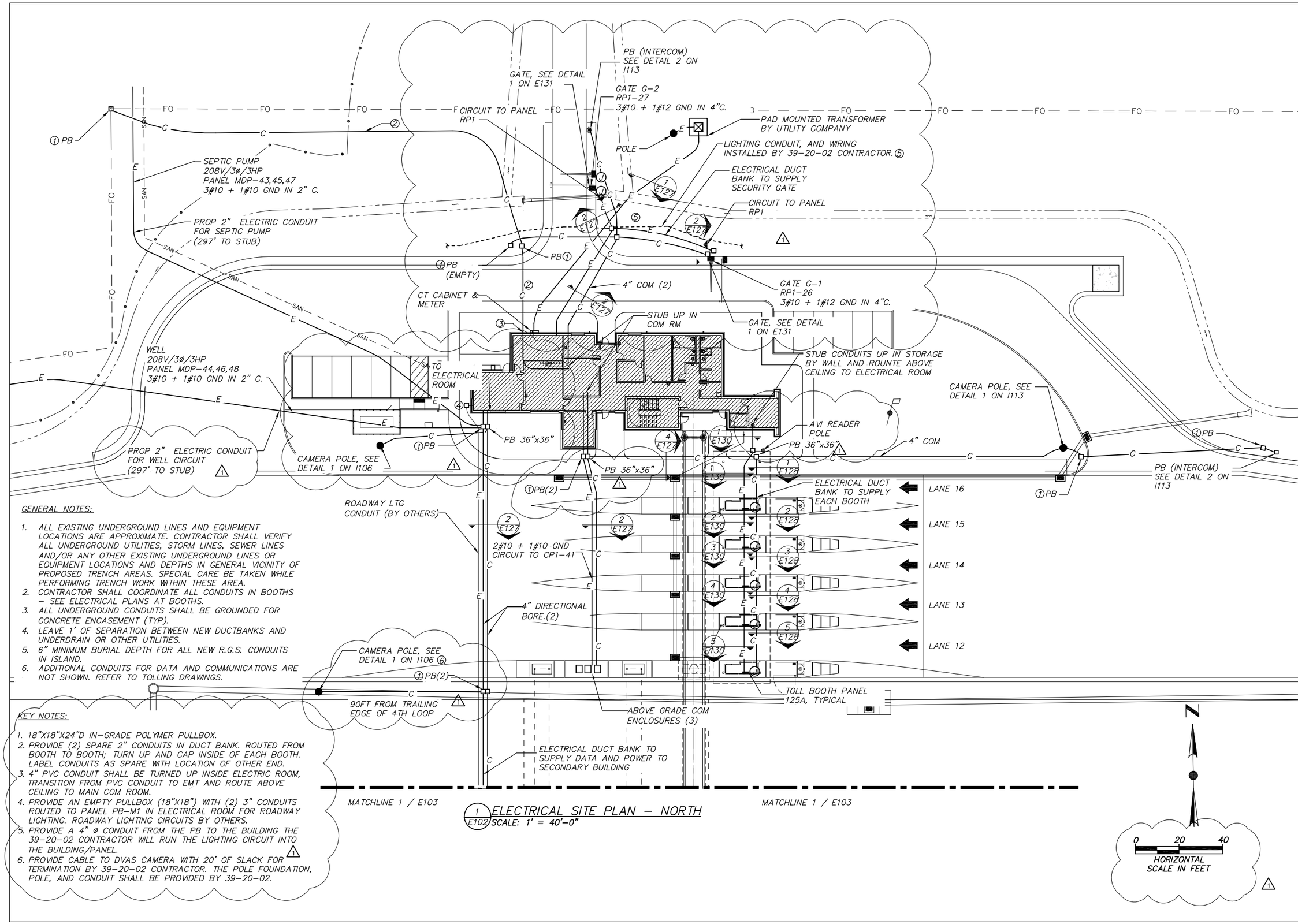

GENERAL NOTES:

1. ALL EXISTING UNDERGROUND LINES AND EQUIPMENT LOCATIONS ARE APPROXIMATE. CONTRACTOR SHALL VERIFY ALL UNDERGROUND UTILITIES, STORM LINES, SEWER LINES AND/OR ANY OTHER EXISTING UNDERGROUND LINES OR EQUIPMENT LOCATIONS AND DEPTHS IN GENERAL VICINITY OF PROPOSED TRENCH AREAS. SPECIAL CARE BE TAKEN WHILE PERFORMING TRENCH WORK WITHIN THESE AREA.
2. CONTRACTOR SHALL COORDINATE ALL CONDUITS IN BOOTHS – SEE ELECTRICAL PLANS AT BOOTHS.
3. ALL UNDERGROUND CONDUITS SHALL BE GROUNDED FOR CONCRETE ENCASEMENT (TYP).
4. LEAVE 1' OF SEPARATION BETWEEN NEW DUCTBANKS AND UNDERDRAIN OR OTHER UTILITIES.
5. 6" MINIMUM BURIAL DEPTH FOR ALL NEW R.G.S. CONDUITS IN ISLAND.
6. ADDITIONAL CONDUITS FOR DATA AND COMMUNICATIONS ARE NOT SHOWN. REFER TO TOLLING DRAWINGS.

KEY NOTES:

1. 18"X18"X24"D IN-GRADE POLYMER PULLBOX.
2. PROVIDE (2) SPARE 2" CONDUITS IN DUCT BANK. ROUTED FROM BOOTH TO BOOTH; TURN UP AND CAP INSIDE OF EACH BOOTH. LABEL CONDUITS AS SPARE WITH LOCATION OF OTHER END.
3. 4" PVC CONDUIT SHALL BE TURNED UP INSIDE ELECTRIC ROOM, TRANSITION FROM PVC CONDUIT TO EMT AND ROUTE ABOVE CEILING TO MAIN COM ROOM.
4. PROVIDE AN EMPTY PULLBOX (18"X18") WITH (2) 3" CONDUITS ROUTED TO PANEL PB-M1 IN ELECTRICAL ROOM FOR ROADWAY LIGHTING. ROADWAY LIGHTING CIRCUITS BY OTHERS.
5. PROVIDE A 4" Ø CONDUIT FROM THE PB TO THE BUILDING THE 39-20-02 CONTRACTOR WILL RUN THE LIGHTING CIRCUIT INTO THE BUILDING/PANEL.
6. PROVIDE CABLE TO DVAS CAMERA WITH 20' OF SLACK FOR TERMINATION BY 39-20-02 CONTRACTOR. THE POLE FOUNDATION, POLE, AND CONDUIT SHALL BE PROVIDED BY 39-20-02.

1 E102 ELECTRICAL SITE PLAN – NORTH
SCALE: 1' = 40'-0"

DESIGN AGENCY
PRIME AE
540 White Pond Drive, Ste. E
Akron, Ohio 44320
(330)-864-7755

NO.	REVISIONS	BY	DATE
1	ADDENDUM No. 2	CK	5/12/20
-	-	-	-

DESIGNED RNS | CHECKED CEK
DRAWN RNS | IN CHARGE CEK

ELECTRICAL SITE PLAN – NORTH
TOLL PLAZA 49
LUCAS COUNTY

PROJECT 58-20-01
DATE: 04/22/2020

E102

152
202

OHIO TURNPIKE AND INFRASTRUCTURE COMMISSION

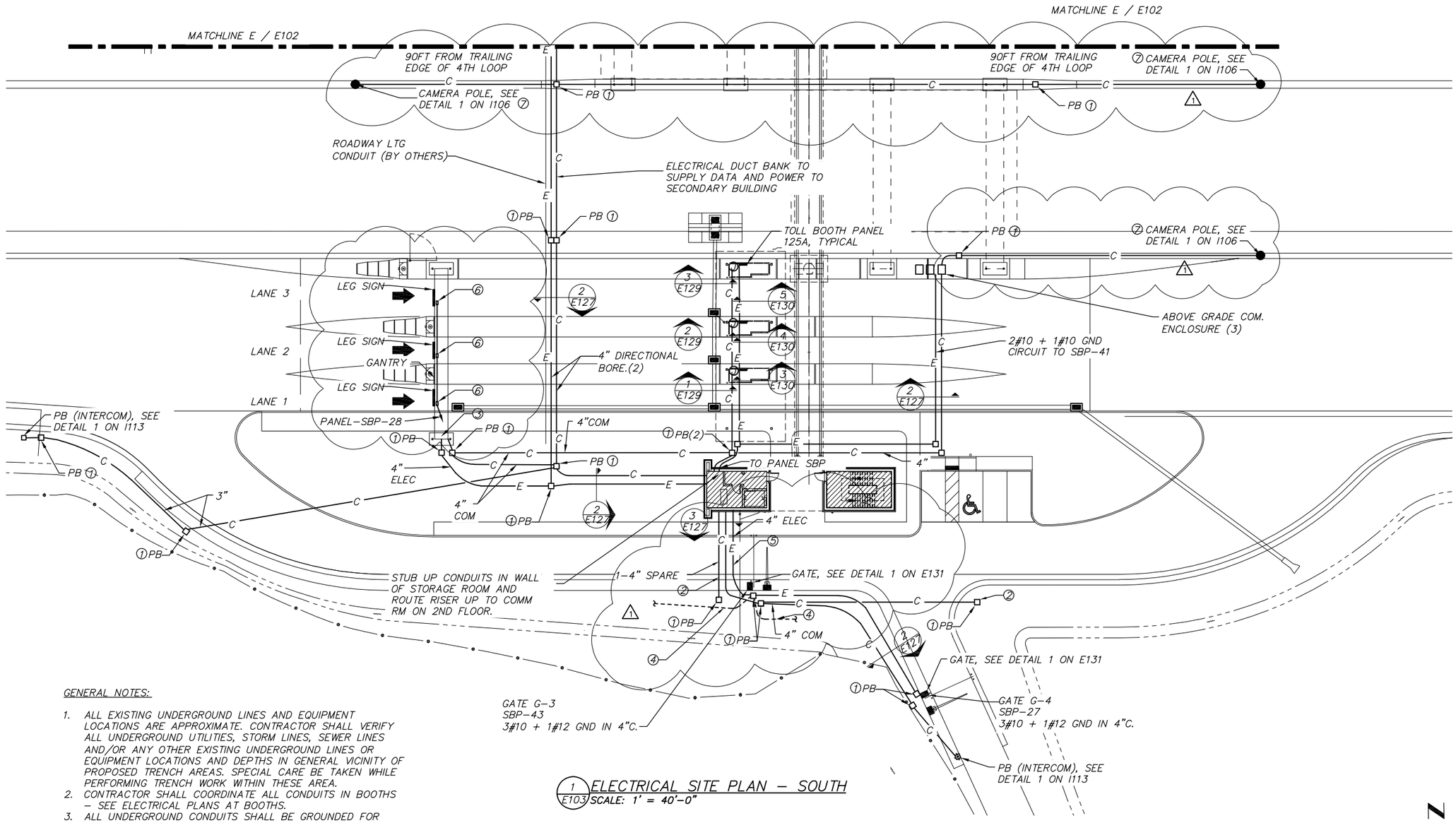

1 E103 ELECTRICAL SITE PLAN – SOUTH

SCALE: 1' = 40'-0"

GENERAL NOTES:

1. ALL EXISTING UNDERGROUND LINES AND EQUIPMENT LOCATIONS ARE APPROXIMATE. CONTRACTOR SHALL VERIFY ALL UNDERGROUND UTILITIES, STORM LINES, SEWER LINES AND/OR ANY OTHER EXISTING UNDERGROUND LINES OR EQUIPMENT LOCATIONS AND DEPTHS IN GENERAL VICINITY OF PROPOSED TRENCH AREAS. SPECIAL CARE BE TAKEN WHILE PERFORMING TRENCH WORK WITHIN THESE AREA.
2. CONTRACTOR SHALL COORDINATE ALL CONDUITS IN BOOTHS – SEE ELECTRICAL PLANS AT BOOTHS.
3. ALL UNDERGROUND CONDUITS SHALL BE GROUNDED FOR CONCRETE ENCASEMENT (TYP).
4. LEAVE 1' OF SEPARATION BETWEEN NEW DUCTBANKSAND UNDERDRAIN OR OTHER UTILITIES.
5. 6" MINIMUM BURIAL DEPTH FOR ALL NEW R.G.S. CONDUITS IN ISLAND.
6. ADDITIONAL CONDUITS FOR DATA AND COMMUNICATIONS ARE NOT SHOWN. REFER TO TOLLING DRAWINGS.

KEY NOTES:

1. 18" 18"X18"X24"D IN-GRADE POLYMER PULLBOX.
2. PROVIDE (1) 4" EMPTY PVC CONDUIT WITH PULL STRING FOR FUTURE USE.
3. POWER AND COMM CONDUITS SHALL BE TURNED UP AND ROUTED UP GANTRY SUPPORT STRUCTURE AND ROUTED ACROSS GANTRY FRAMING TO DEVICES, REFER TO GANTRY ELECTRICAL/IT DETAILS ON I114.
4. LIGHTING CONDUIT, AND WIRING INSTALLED BY 39-20-02 CONTRACTOR.
5. PROVIDE A 4"ø CONDUIT FROM THE PB TO THE BUILDING FOR THE GATE CIRCUIT AND LIGHTING. THE 59-20-02 CONTRACTOR WILL RUN THE LIGHTING CIRCUIT INTO THE BUILDING/ PANEL.
6. PROVIDE 208V, 2PST NFSS, NEMA 4 SS, MOUNTED BEHIND LED SIGN ON TRUSS. PROVIDE A 15' LIQUID-TIGHT WHIP FOR CONNECTION TO LEF SIGN BY 39-20-02 CONTRACTOR.
7. PROVIDE CABLE TO DVAS CAMERA WITH 20' OF SLACK FOR TERMINATION BY 39-20-02 CONTRACTOR. THE POLE FOUNDATION, POLE, AND CONDUIT SHALL BE PROVIDED BY 39-20-02.

N

0 20 40
HORIZONTAL SCALE IN FEET

DESIGN AGENCY
PRIME AE
540 White Pond Drive, Ste. E
Akron, Ohio 44320
(330)864-7755

NO.	REVISIONS	BY	DATE
1	ADDENDUM No. 2	CK	5/12/20
-	-	-	-

DESIGNED RNS | CHECKED CEK
DRAWN RNS | IN CHARGE CEK

ELECTRICAL SITE PLAN – SOUTH
TOLL PLAZA 49
LUCAS COUNTY

PROJECT 58-20-01
DATE: 04/22/2020

E103

OHIO TURNPIKE AND INFRASTRUCTURE COMMISSION

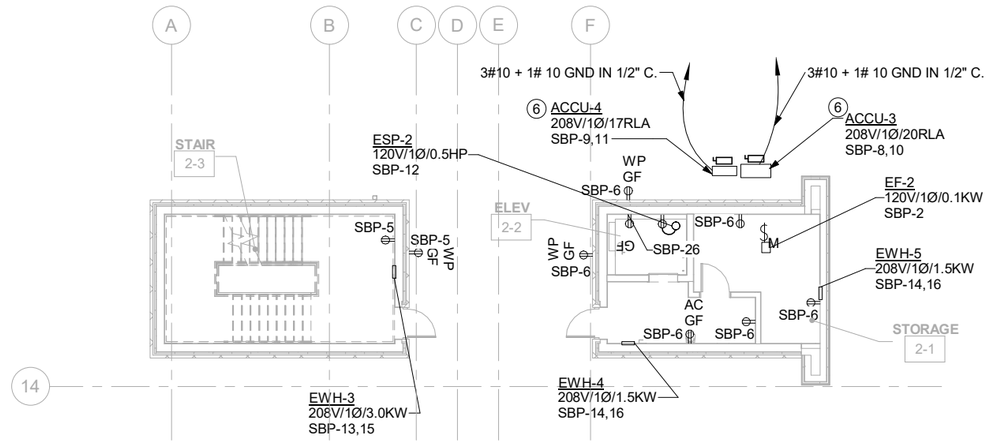

SECONDARY BUILDING FIRST FLOOR - POWER

2 E104

1/16" = 1'-0"

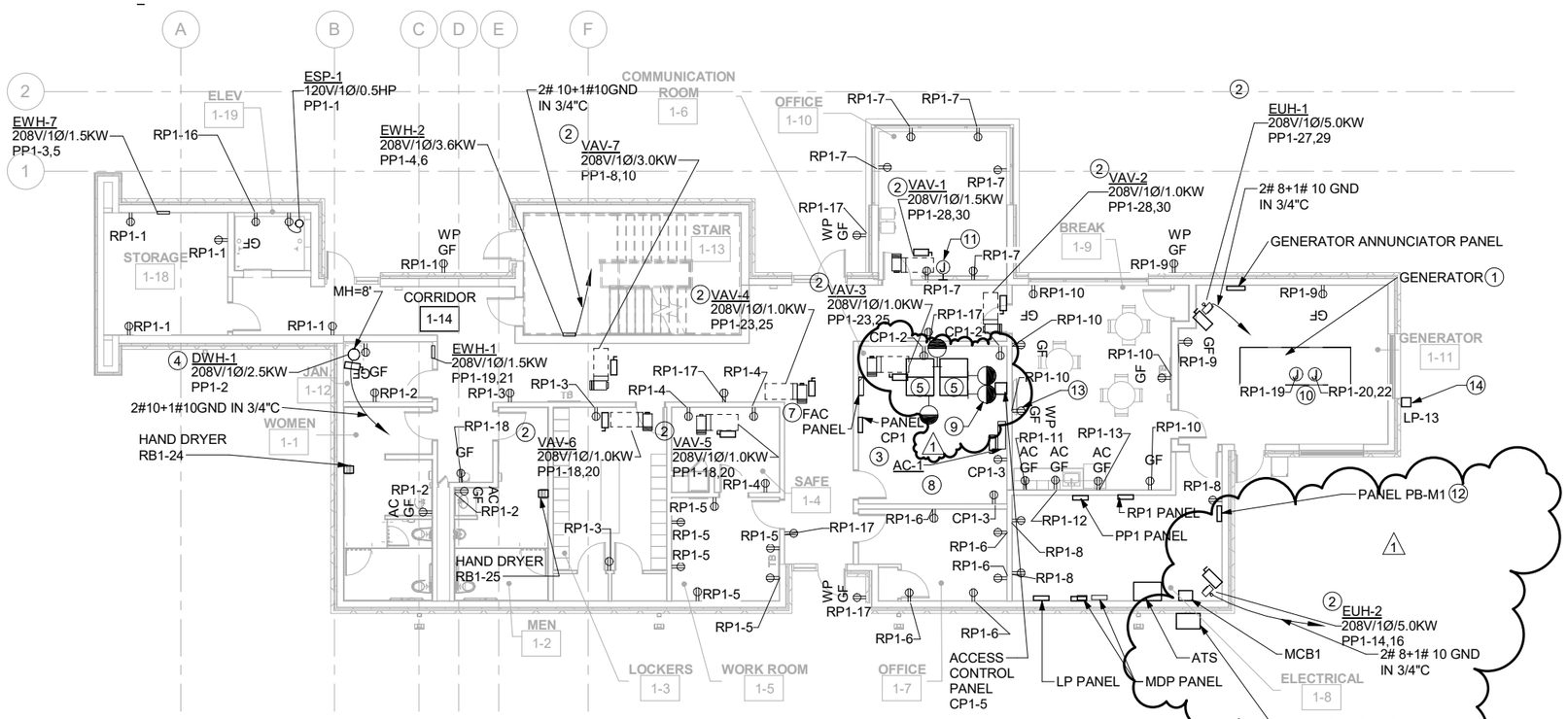

MAIN UTILITY BUILDING FIRST FLOOR POWER PLAN

1 E104

1/16" = 1'-0"

GENERAL NOTES

1. REFER TO HVAC AND PLUMBING SCHEDULES FOR POWER REQUIREMENTS.
2. FOR ELECTRICAL RISER DIAGRAM, SEE SHEET E116. FOR PANELBOARD SCHEDULES, SEE SHEET E118-E125.

KEY NOTES:

1 PROVIDE A 208/120, 3Ø, 300KW DIESEL GENERATOR WITH A 530 GALLON BASE MOUNTED FUEL TANK. PROVIDE 2#12 + 1#12 GRD FOR BATTERY CHARGER AND 2#12 + 1#12 GRD FOR BLOCK HEATER, ALL IN 1" C. PROVIDE (2) 1" CONDUITS TO ATS FOR CONTROL WIRING.

2 PROVIDE 208V, 2PST, 30A FUSED DISCONNECT SWITCH. FUSE PER UNIT MANUFACTURERS RECOMMENDATION.

3 EQUIPMENT IS POWERED BY CORRESPONDING OUTDOOR UNIT AND DOES NOT REQUIRE ADDITIONAL ELECTRICAL CONNECTION.

4 PROVIDE 120V, 2PST, 30A NON-FUSED SAFETY SWITCH.

5 COMMUNICATIONS RACK SHALL CONTAIN SECURITY, TELECOMM, TOLLING, CAMERA EQUIPMENT REFER TO I104 DRAWING FOR MORE INFORMATION.

6 PROVIDE 208V, 2PST, 30A FUSED DISCONNECT SWITCH IN A NEMA 3R ENSLOSURE. FUSE PER UNIT MANUFACTURER'S RECOMMENDATION.

7 FIRE ALARM PANEL CIRCUIT TO PANEL CP1–1, 120V/1Ø/1000W

8 PROVIDE 3/4" PLYWOOD BACKBOARD ON ALL WALLS FOR MOUNTING OF COMMUNICATIONS EQUIPMENT.

9 PROVIDE A NEMA L6-30 RECEPTACLE MOUNTED TO TOP OF COMMUNICATIONS RACK. PROVIDE 2#10 + 1#10 GND IN 3/4"C HOMERUN. ALL 4 WILL BE CIRCUITED TO PANEL CP1 (4-6), (8-10), (12-14) AND (22,24). 1

10 GENERATOR BATTERY 120V, 1.0KW CIRCUIT TO PANEL RP1 & BLOCK HEATER 208V/1Ø/1.5KW CIRCUIT TO PANEL RP1.

11 PROVIDE 4 GANG BOX WITH 4 SWITCHES FOR MAUNAL CONTROL OF THE GATES. ONE SWITCH FOR EACH GATE. MOUNT ON WALL AT 4'-0" AFF.

12 PROVIDE (4) 1"EMPTY CONDUITS WITH PULLSTRING ROUTED TO EXTERIOR PULLBOX LOCATED OUTSIDE OF GENERATOR ROOM FOR ROADWAY LIGHTING CIRCUITS. LIGHTING CIRCUITS SHALL BE PROVIDED BY ROADWAY LIGHTING CONTRACTOR.

13 60" AFF FOR TV IN BREAK RM 1-9.

14 PROVIDE AN AUTOMATIC FUEL PORT (REMOTE DIESEL FUEL FILL STATION) FOR FILLING THE GENERATOR BASE MOUNTED FUEL TANK. REMOTE FILL STATION PROVIDES AN EXTERIOR CONNECTION OF THE FILL HOSE AND CAPTURES SPILLS THAT MAY OCCUR AT THE FILLING POINT DURING FILLING OPERATIONS. THE FILL STATION SHALL INCLUDE A CONTROLLER, 2-3" INLET DISCONNECT, 7-GALLON SPILL CONTAINMENT, AND GROUND STUD IN A NEMA 3R LOCKABLE ENCLOSURE. THE CONTROLLER SHALL PROVIDE LEVEL SENSORS, TANK FULL AUDIBLE/VISUAL ALARM, HIGH LEVEL CONTROL POWER SWITCH, VALVE OPEN/CLOSE PUSH BUTTONS, AS MANUFACTURED BY SIMPLEX OR EQUAL.

0 8' 16' 32'

SCALE: 1/16" = 1'-0"

N

DESIGN AGENCY
PRIME AE
540 White Pond Drive, Ste. E
Akron, Ohio 44320
(330)-864-7755

NO.	REVISIONS	BY	DATE
1	ADDENDUM No.2	CK	5/12/20

DESIGNED RNS | CHECKED CEK
DRAWN RNS | IN CHARGE CEK

POWER PLAN - 1ST FLOOR

TOLL PLAZA 49 — LUCAS COUNTY

PROJECT 58-20-01
DATE: 04/22/2020

E104

154 / 202

OHIO TURNPIKE AND INFRASTRUCTURE COMMISSION

5/12/2020 2:15:37 PM

Project Name

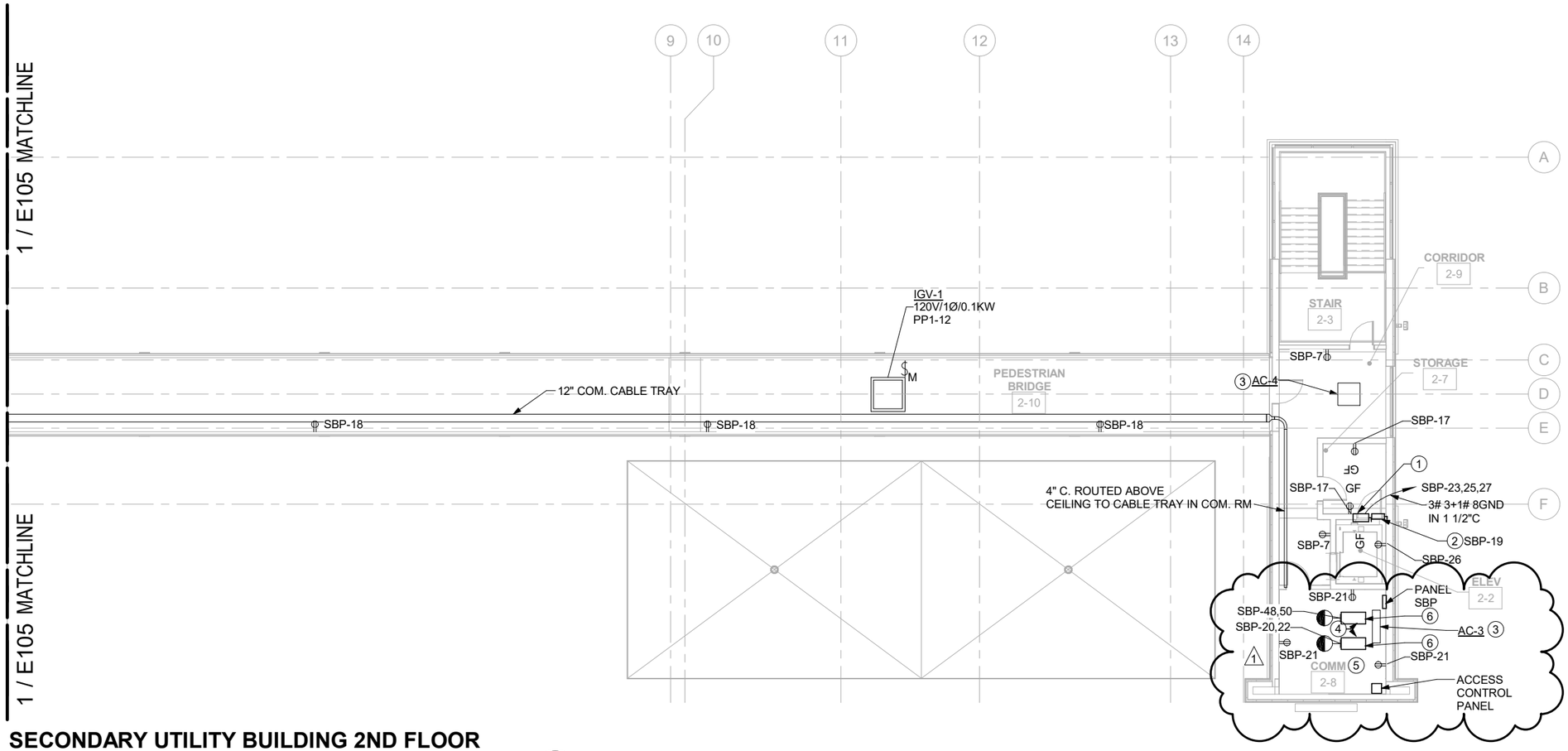

SECONDARY UTILITY BUILDING 2ND FLOOR POWER PLAN

1/16" = 1'-0"

1
E106

GENERAL NOTES

1. REFER TO HVAC AND PLUMBING SCHEDULES FOR POWER REQUIREMENTS.
2. FOR ELECTRICAL RISER DIAGRAM, SEE SHEET E116. FOR PANELBOARD SCHEDULES, SEE SHEET E118-E125.

KEY NOTES:

1 PROVIDE 208V, 3PST 100A FUSED DISCONNECT SWITCH AND CONNECT TO ELEVATOR CONTROLLER (208V, 3Ø, 20HP). FUSE PER ELEVATOR SUPPLIER'S RECOMMENDATION. VERIFY REQUIREMENTS WITH SUPPLIER. CIRCUIT TO SBP.

2 PROVIDE 120V, 1P, 30A FUSED DISCONNECT SWITCH AND CONNECT TO ELEVATOR CAB LIGHTING. CIRCUIT TO PANEL SBP

3 EQUIPMENT IS POWERED BY CORRESPONDING OUTDOOR UNIT AND DOES NOT REQUIRE ADDITIONAL ELECTRICAL CONNECTIONS.

4 PROVIDE A NEMA L6-30 RECEPTACLE MOUNTED TO TOP OF COMMUNICATIONS CABINET. PROVIDE 2#10 + 1#10 GND IN 3/4"C. HOMERUN.

5 PROVIDE 3/4" PLYWOOD BACKBOARD ON ALL WALLS FOR MOUNTING OF COMMUNICATIONS EQUIPMENT.

6 COMMUNICATION RACK SHALL CONTAIN SECURITY, TELECOM, TOLLING AND CAMERA EQUIPMENT REFER TO I105 FOR MORE INFORMATION.

1

0 8' 16' 32'

SCALE: 1/16" = 1'-0"

DESIGN AGENCY
PRIME AE
540 White Pond Drive, Ste. E
Akron, Ohio 44320
(330)-864-7755

NO.	REVISIONS	BY	DATE
1	ADDENDUM No.2	CK	5/12/20

DESIGNED RNS
CHECKED CEK
DRAWN RNS
IN CHARGE CEK

SOUTH SECONDARY UTILITY BUILDING
SECOND FLOOR - POWER PLAN
TOLL PLAZA 49
LUCAS COUNTY

PROJECT 58-20-01
DATE: 04/22/2020

E106

156
202

OHIO TURNPIKE AND INFRASTRUCTURE COMMISSION

Project Name 5/12/2020 2:19:19 PM

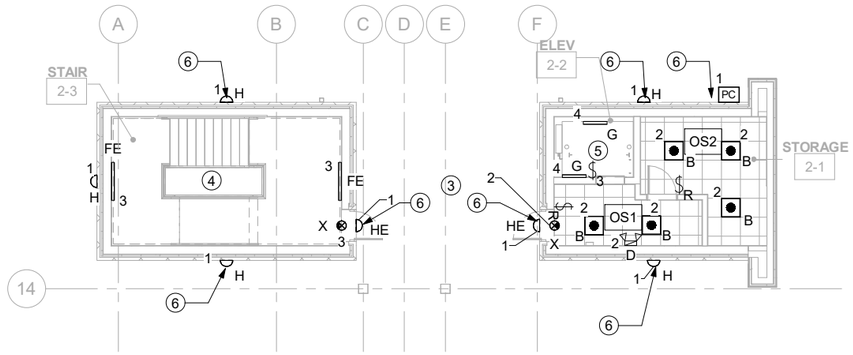

SECONDARY UTILITY BUILDING FIRST FLOOR LIGHTING PLAN

1/16" = 1'-0"

2 E107

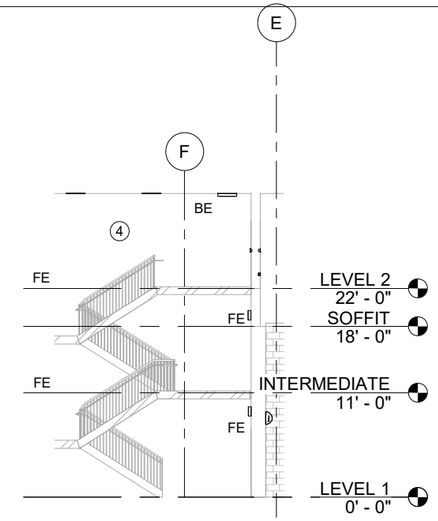

STAIRCASE LIGHTING - SECTION

1/16" = 1'-0"

3 E107

GENERAL NOTES

1. FOR LIGHTING SCHEDULE, SEE SHEET E124. FOR PANELBOARD SCHEDULES, SEE SHEET E117-123.
2. ADJUST OCCUPANCY SENSORS TO AVOID AIR VENTS AND FANS.
3. ALL SWITCHES FOR A GIVEN ROOM ARE LOCATED WITHIN THAT ROOM, UNLESS NOTED OTHERWISE.
4. SEE ARCHITECTRAL PLANS FOR EXACT LOCATIONS

KEY NOTES:

1 PHOTO CELL AND LIGHTING CONTACTOR FOR ROADWAY LIGHTING CONNECTED TO PB-M1.

2 UNLESS OTHERWISE NOTED ALL LIGHTING SHOWN ON THIS PLAN SHALL BE CONNECTED TO CIRCUIT INDICATED IN PANEL LP.

3 UNLESS OTHERWISE NOTED ALL LIGHTING SHOWN ON THE PLAN SHALL BE CONNECTED TO CIRCUIT INDICATED IN PANEL SBP.

4 ALL STAIRS SHALL HAVE LIGHTING FIXTURE 'FE' MOUNTED AT 7' 6" A.F.F. ON THE FIRST FLOOR AND THE NEXT 3 LANDINGS. SEE STAIRCASE LIGHTING-SECTION 3 E107.

5 THREE-WAY SWITCH LOCATED IN SHAFT AND CONNECTED TO SWITCH AT TOP OF SHAFT. COORDINATE LOCATIONS WITH ELEVATOR SUPPLIER.

6 ALL EXTERIOR BUILDING MOUNTED LIGHT FIXTURES SHALL BE CONTROLLED BY PHOTOCELL.

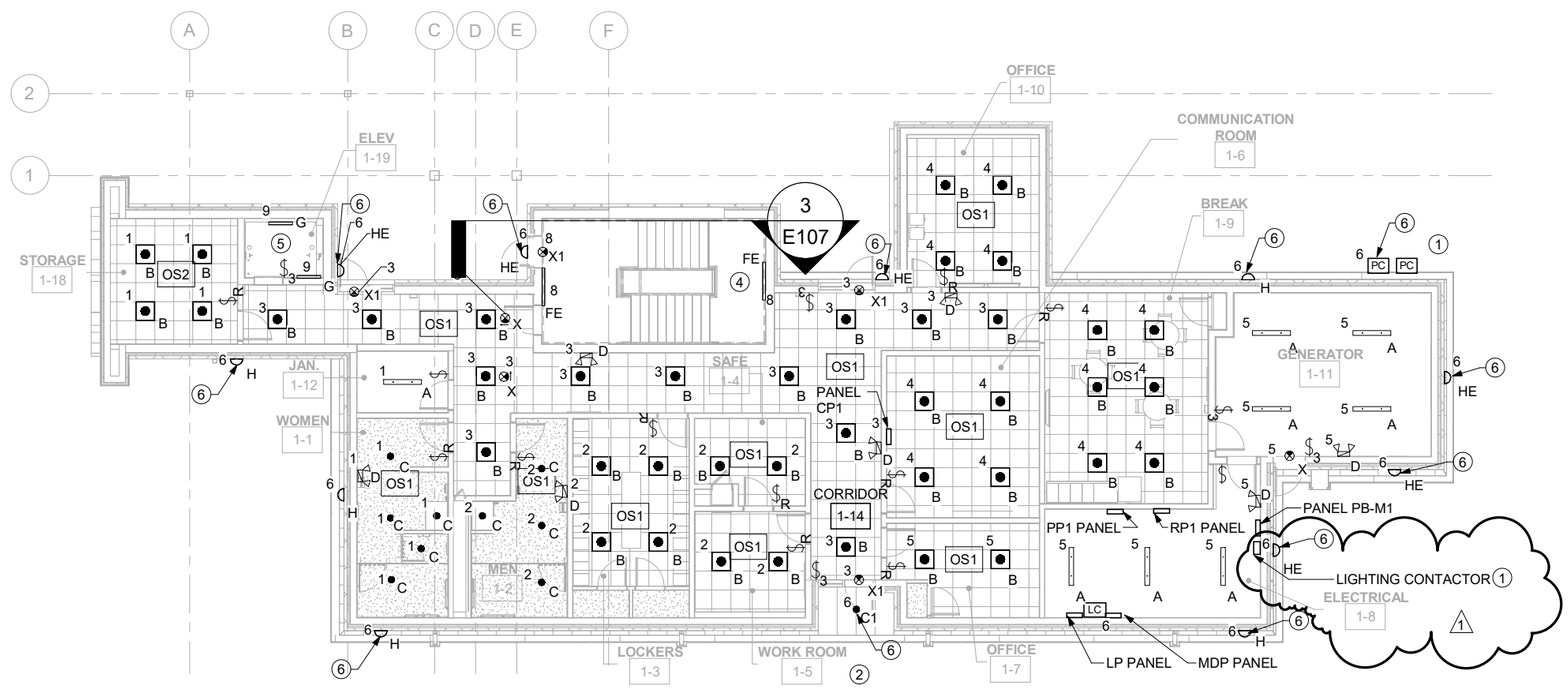

MAIN UTILITY BUILDING FIRST FLOOR LIGHTING PLAN

1/16" = 1'-0"

1 E107

0 8' 16' 32'

SCALE: 1/16" = 1'-0"

N

DESIGN AGENCY
PRIME AE
540 White Pond Drive, Ste. E
Akron, Ohio 44320
(330)-864-7755

OHIO TURNPIKE

NO.	REVISIONS	BY	DATE
1	ADDENDUM No.2	CK	5/12/20

DESIGNED RNS
CHECKED CEK
DRAWN RNS
IN CHARGE CEK

LIGHTING 1ST FLOOR MAIN & SECONDARY
TOLL PLAZA 49
LUCAS COUNTY

PROJECT 58-20-01
DATE: 04/22/2020

E107

157
202

OHIO TURNPIKE AND INFRASTRUCTURE COMMISSION

5/12/2020 2:24:12 PM

Project Name

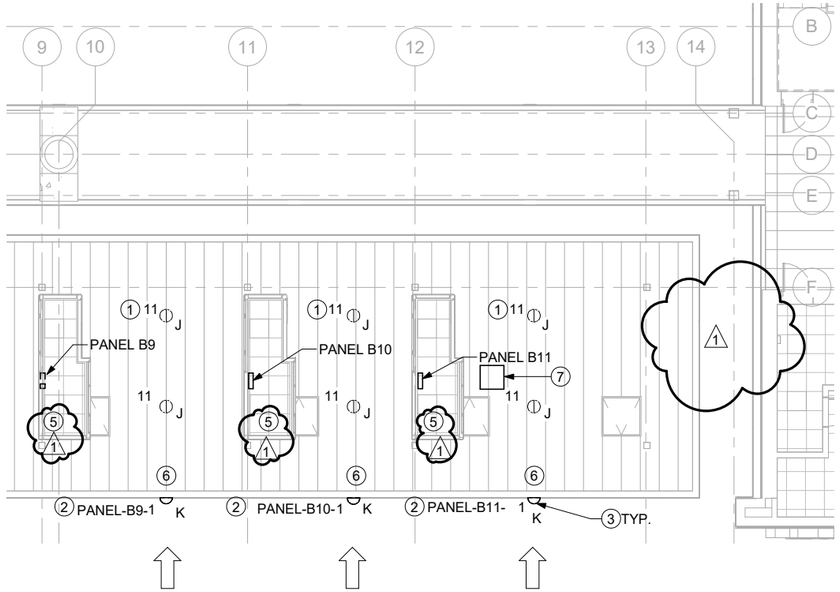

SOUTHERN CANOPY LIGHTING PLAN

1/16" = 1'-0"

2 E110

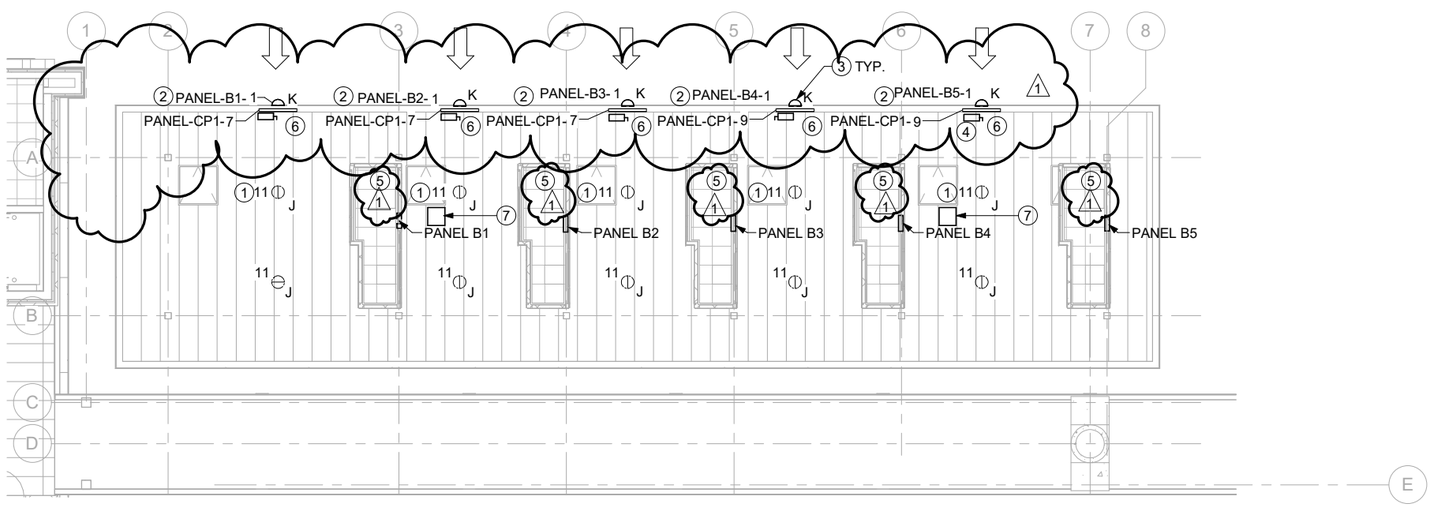

NORTHERN CANOPY LIGHTING PLAN

1/16" = 1'-0"

1 E110

GENERAL NOTES

1. FOR LIGHTING SCHEDULE, SEE SHEET E126.
2. FOR TYPICAL TOLLBOOTH PANELBOARD SCHEDULES, SEE SHEET E124.
3. ALL CONDUIT IN CANOPY AND EXPOSED ON COLUMNS SHALL BE RIGID GALVANIZED STEEL. (TYPICAL).
4. ALL CONDUIT LOCATED ON COLUMNS, SHALL BE PAINTED TO MATCH COLUMNS. (TYPICAL).
5. CANOPY LIGHT FIXTURE AND LANE LIGHTS SHALL BE CENTERED ABOVE EACH LANE CENTERLINE, SEE ARTHITECTURAL DRAWINGS.

KEY NOTES:

1 UNLESS OTHERWISE NOTED LIGHTING FIXTURE 'J' SHOWN ON THE NORTHERN & SOUTHERN CANOPY LIGHTING PLAN SHALL BE CONNECTED TO CIRCUIT INDICATED IN PANEL LP. ROUTE CIRCUIT DOWN COLUMN NEAREST THE BUILDING TO PULLBOX TO PANEL. SEE CANOPY RISER DETAIL ON I114.

2 EACH LIGHTING FIXTURE 'K' SHALL BE CIRCUIT TO APPROPRIATE TOLLBOOTH PANEL.

3 LANE LIGHTS SHALL BE CONTROLLED BY 2 – POSITION SELECTOR SWTICH LOCATED IN TOLLBOOTH. PROVIDE 3# 12+1# 12GND IN 3/4"C RUN IN CANOPY CEILING TO PANEL IN BOOTH. PROVIDE 2# 12+1# 12 GND FOR PLYON LIGHTS.

4 PROVIDE 208V, 2PST, 30A NFSS, NEMA 4 SS MOUNTED BEHIND LED SIGN ON SIGN SUPPORT. PROVIDE A 15' LIQUID-TIGHT WHIP FOR CONNECTION TO LED SIGN BY TCS INTEGRATOR.

5 PROVIDE JUNCTION BOXES PER LANE IN THE CANOPY FOR TOLLING EQUIPMENT SEE EXIT LANE OVERHEAD EQUIPMENT PLAN ON SHEET-I118.

6 PROVIDE (2) CAT6 CABLES TO LED SIGN FOR CONTROL. ONE CABLE SHALL BE ROUTED TO THE COM ROOM AND ONE CABLE ROUTED TO THE ASSOCIATED BOOTH, VIA CHASE. ALL CABLES SHALL BE IN MIN. 1" CONDUIT.

7 ACCESS POINT, MOUNTED TO UNDERSIDE OF CANOPY.

1

N

0 8' 16' 32'

SCALE: 1/16" = 1'-0"

DESIGN AGENCY
PRIME AE
540 White Pond Drive, Ste. E
Akron, Ohio 44320
(330)-864-7755

NO.	REVISIONS	BY	DATE
1	ADDENDUM No.2	CK	5/12/20

DESIGNED	CHECKED	IN CHARGE
RNS	CEK	CEK
DRAWN		
RNS		

LUCAS COUNTY

CANOPY LIGHTING PLAN

TOLL PLAZA 49

PROJECT 58-20-01

DATE: 04/22/2020

E110

OHIO TURNPIKE AND INFRASTRUCTURE COMMISSION

OHIO TURNPIKE

5/12/2020 2:26:48 PM

Project Name

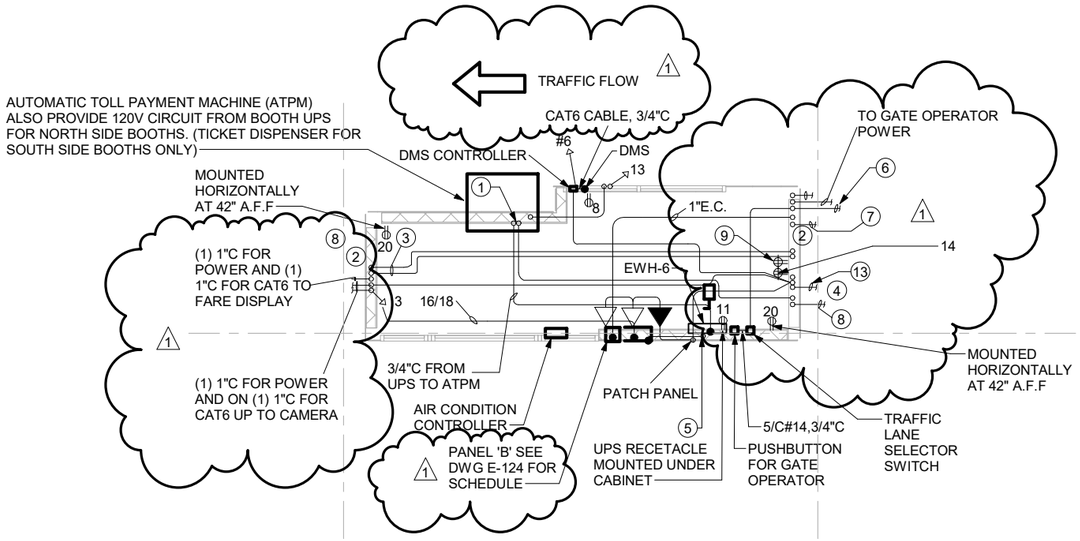

ELECTRICAL PLAN AT BOOTH (TYP.)

1 / E111

3/16" = 1'-0"

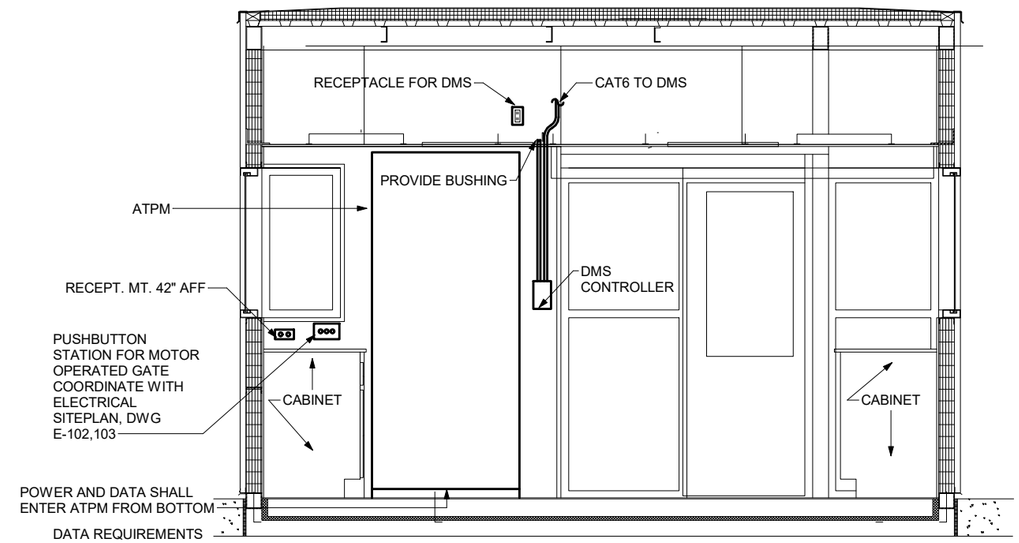

BOOTH ELEVATION #1

2 / E111

SCALE: N.T.S.

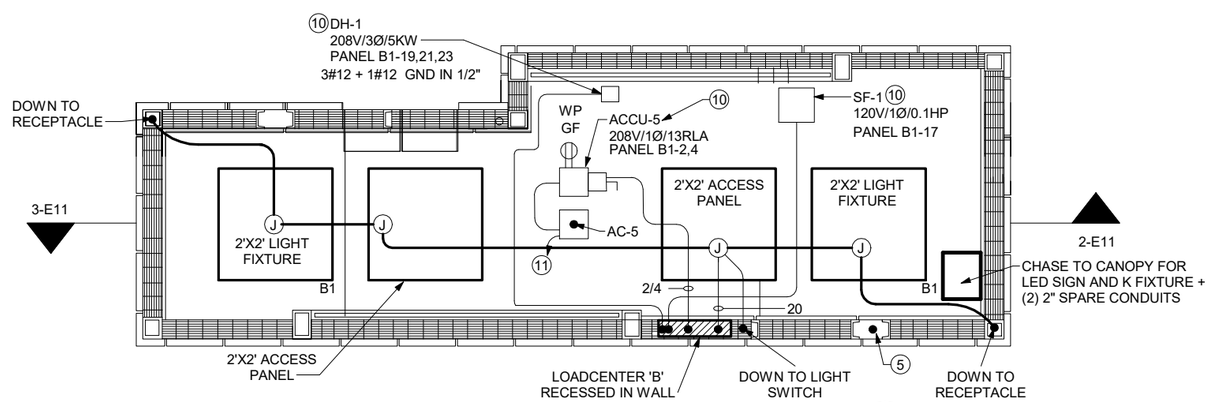

PLAN ABOVE CEILING

4 / E111

SCALE: N.T.S.

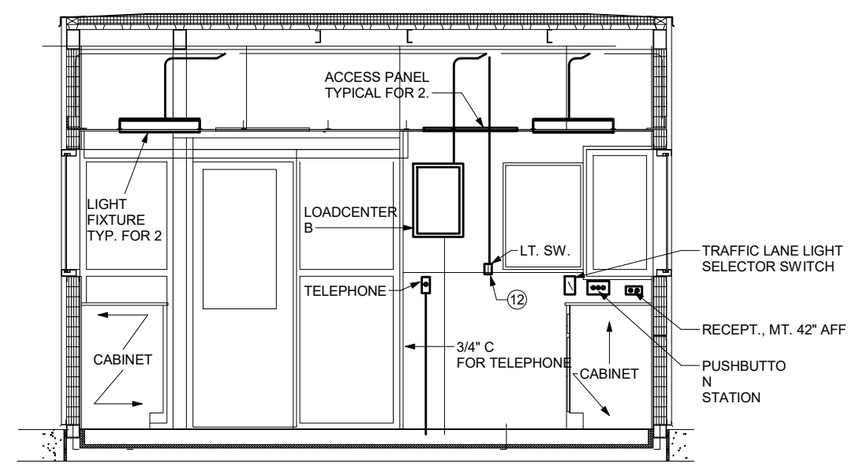

BOOTH ELEVATION #2

3 / E111

SCALE: N.T.S

KEY NOTES:

1. SPACE ALL CONDUITS AS CLOSE AS POSSIBLE IN BASE PLATE OF AUTOMATIC TOLL PAYMENT MACHINE (ATPM) OPENING.
2. ALL CONDUITS MUST RISE WITHIN 4" OF THE END WALL OF THE BOOTH, AND 1" CLEAR OF THE END WALL.
3. PROVIDE (2) 2 1/2 " CONDUIT FROM ONE END OF THE BOOTH TO THE OTHER END.
4. EACH STUB-UP CONDUIT SHALL BE RUN TO A PULLBOX ABOVE IT.
5. 3/4" R.G.S. CONDUIT WITH 3#12 & 1 #12 GND-RUN CONDUIT CONCLEAED IN DUCT DROP ENCLOSURE TO CANOPY FOR POWER TO TYPE 'B1' FIXTURES.
6. 3#12 & 1#12 GND IN 3/4"C - CONTROL WIRING FROM GATE OPERATOR TO PUSHBUTTON STATION IN TOLLBOOTH.
7. INTERLOCK GATE OPERATOR WITH TRAFFIC LANE LIGHTS.
8. PROVIDE (1) 4" SCHED. 80 PVC CONDUIT ROUTED TO PULLBOX.
9. MOUNTED 15" A.F.F. ON OUTSIDE WALL OF BOTH INSIDE LPU CABINET. PROVIDE (1) ONE SWITCHED BROWN RECEPTACLE WITH SWITCH MOUNTED ON FRONT OF CABINET AND (3) THREE UNSWITCHED IVORY DUPLEX RECEPTACLES. SEE ARCHITECTURAL DRAWINGS FOR MOUNTING DETAILS.
10. ACCU-5, SF-1 & DH-1 TO BE MOUNTED ON THE ROOF. REFER TO DRAWING M-108.
11. 1-STP#22, 3/4"C DOWN TO AIR CONDITIONING CONTROLLER.
12. PROVIDE TWO-GANG BOX FOR BOOTH LIGHT SWITCH AND BLANK COVER FOR FUTURE ROTARY SWITCH.
13. 3#12 & 1#12 GROUND IN 3/4"C CONDUIT FROM PL FIXTURE TO LOAD CENTER.

DESIGN AGENCY
PRIME AE
540 White Pond Drive, Ste. E
Akron, Ohio 44320
(330)-864-7755

NO.	REVISIONS	BY	DATE
1	ADDENDUM No.2	CK	5/12/20

DESIGNED RNS | CHECKED CEK | DRAWN RNS | IN CHARGE CEK

TOLLBOOTH

LUCAS COUNTY

TOLL PLAZA 49

PROJECT 58-20-01

DATE: 04/22/2020

E111

OHIO TURNPIKE AND INFRASTRUCTURE COMMISSION

5/12/2020 2:28:53 PM

Project Name

GENERAL NOTES

1. FOR NOTES AND DETAIL SEE SHEET E115
2. INSTALL AIR TERMINAL FOR ANY ROOFTOP EXHAUST AN OR VENTILATOR THAT IS NOT WITHIN A ZONE OF PROTECTION AND BOND TO NEAREST LIGHTNING PROTECTION CABLE PER DETAIL 2 OF SHEET E115.

1

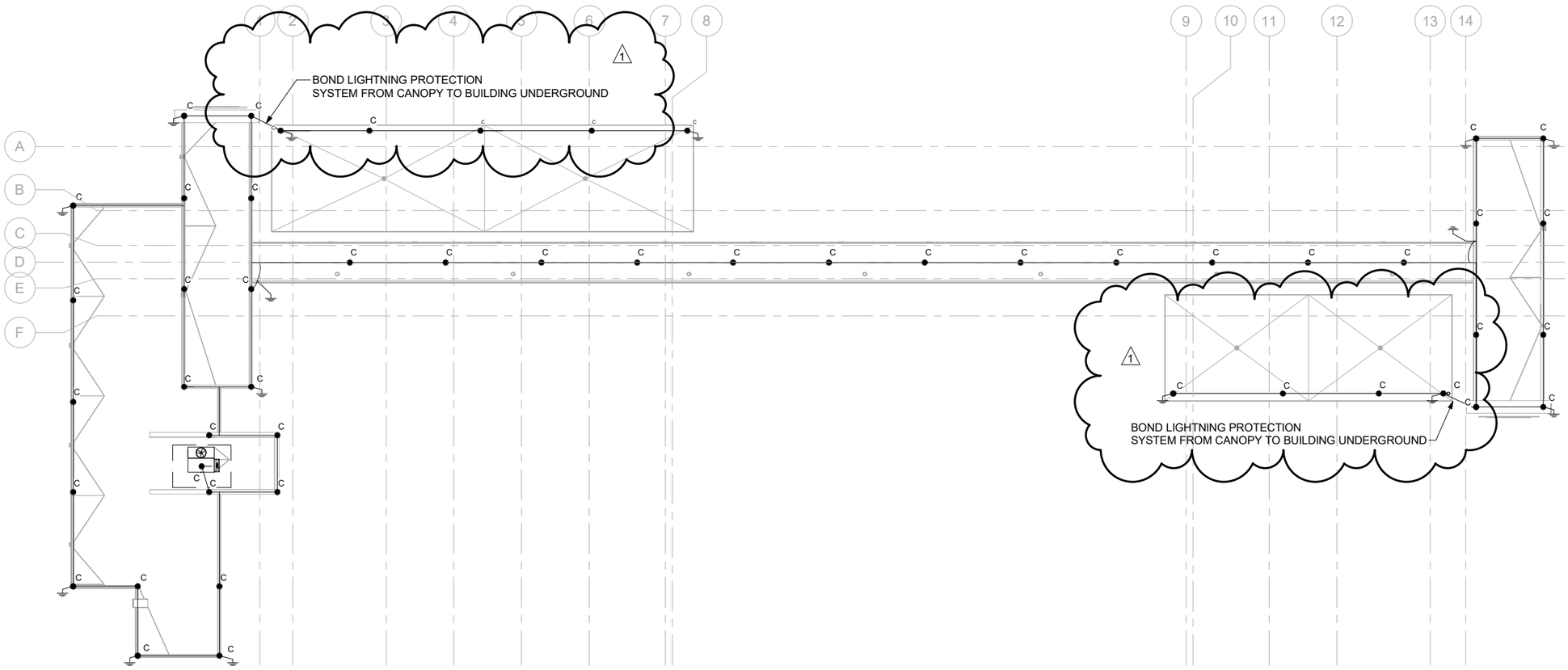

LIGHTNING PROTECTION ROOF PLAN

1/32" = 1'-0"

1 / E114

0 16' 32' 64'

SCALE: 3/16" = 1'-0"

DESIGN AGENCY

PRIME AE

540 White Pond Drive, Ste. E
Akron, Ohio 44320
(330)-864-7755

NO.	REVISIONS	BY	DATE
1	ADDENDUM No.2	CK	5/12/20

DESIGNED RNS
CHECKED CEK
DRAWN RNS
IN CHARGE CEK

LIGHTNING PROTECTION ROOF PLAN

TOLL PLAZA 49

LUCAS COUNTY

PROJECT 58-20-01
DATE: 04/22/2020

E114

164 / 202

OHIO TURNPIKE AND INFRASTRUCTURE COMMISSION

OHIO TURNPIKE

5/12/2020 3:54:49 PM

Project Name

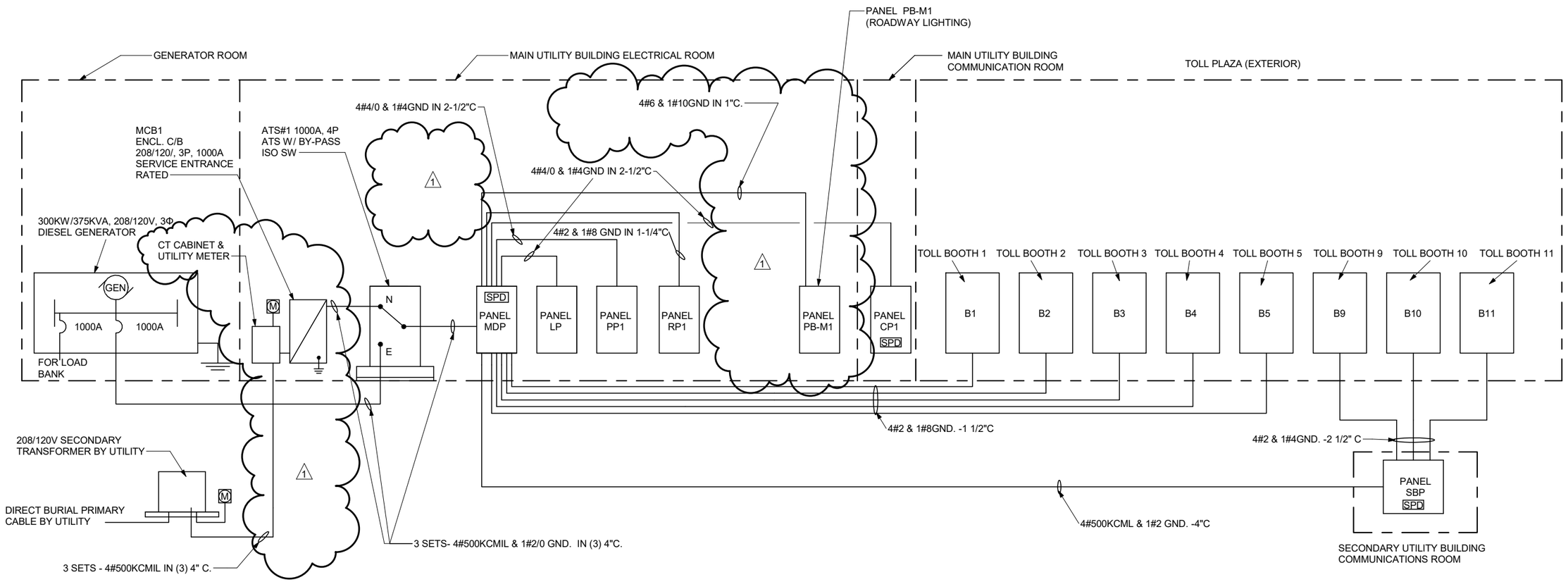

POWER RISER DIAGRAM

1 / E116

SCALE: N.T.S

NO.	REVISIONS	BY	DATE
1	ADDENDUM No.2	CK	5/12/20

DESIGNED RNS | CHECKED CEK
DRAWN RNS | IN CHARGE CEK

DESIGN AGENCY
PRIME AE
540 White Pond Drive, Ste. E
Akron, Ohio 44320
(330)-864-7755

OHIO TURNPIKE

OHIO TURNPIKE AND INFRASTRUCTURE COMMISSION

POWER RISER DIAGRAM

LUCAS COUNTY

TOLL PLAZA 49

PROJECT 58-20-01
DATE: 04/22/2020

E116

5/12/2020 2:30:27 PM

Project Name

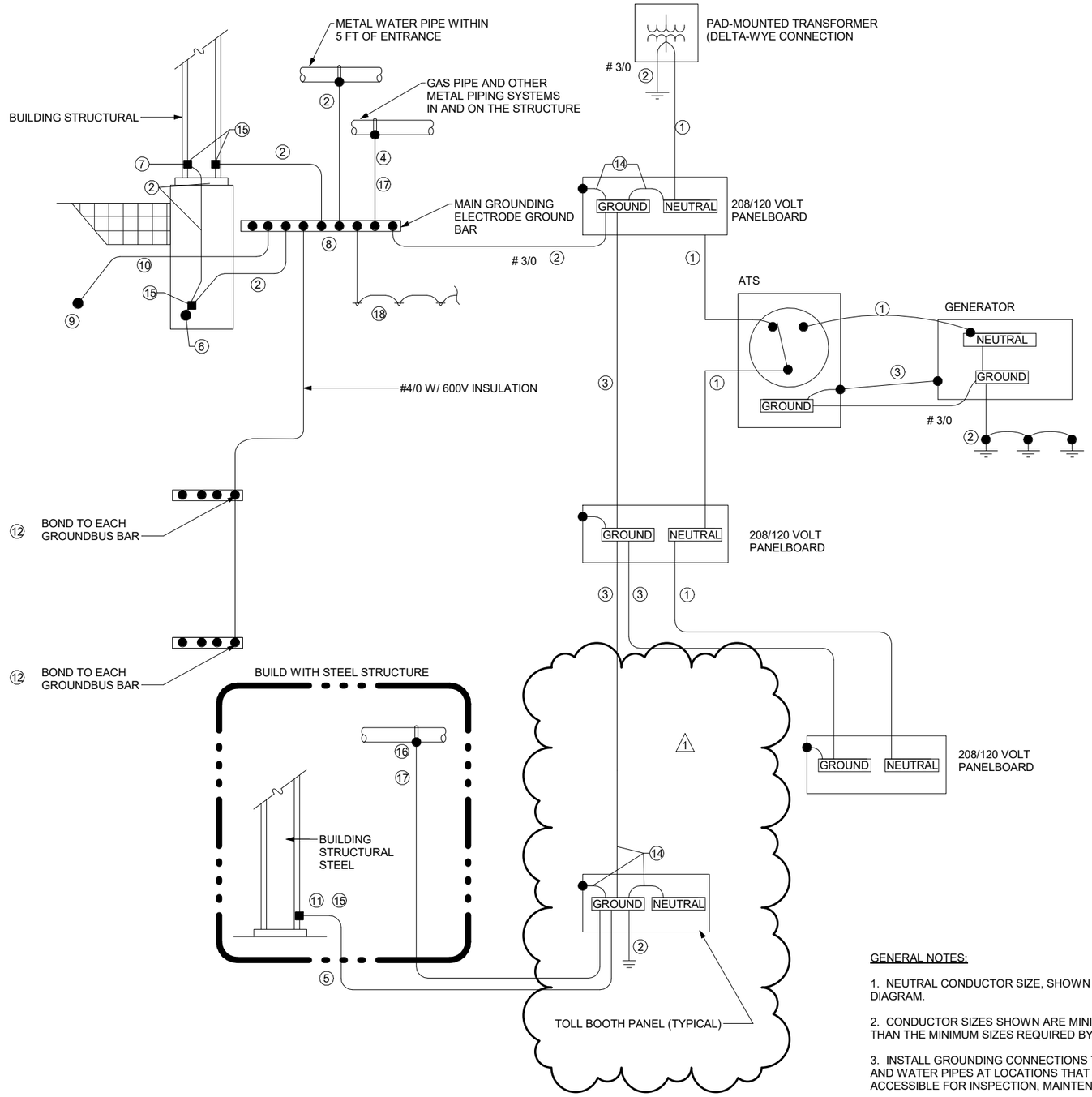

GROUNDING SYSTEM DETAIL

1 E117

SCALE: N.T.S

GENERAL NOTES:

1. NEUTRAL CONDUCTOR SIZE, SHOWN ON POWER RISER DIAGRAM.

2. CONDUCTOR SIZES SHOWN ARE MINIMUM AND MAY BE LARGER THAN THE MINIMUM SIZES REQUIRED BY NEC.

3. INSTALL GROUNDING CONNECTIONS TO BUILDING STRUCTURE AND WATER PIPES AT LOCATIONS THAT ARE VISIBLE AND ACCESSIBLE FOR INSPECTION, MAINTENANCE, AND TESTING.

4. INSTALL AN INSULATED THROAT GROUNDING BUSHING ON EACH METALLIC SERVICE ENTRANCE CONDUIT. BOND TO GROUND BUS USING CONDUCTOR THAT IS SIZED BASED ON NEC TABLE 250.66 USING THE SERVICE PHASE CONDUCTOR SIZE.

5. INSTALL AN INSULATED THROAT GROUNDING BUSHING ON EACH METALLIC FEEDER CONDUIT. BOND TO GROUND BUS USING CONDUCTOR THAT IS SIZED BASED ON NEC TABLE 250.122 USING THE FEEDER CIRCUIT OVERCURRENT DEVICE SIZE OR THE SEPARATELY DERIVED SYSTEM OVERCURRENT DEVICE SIZE.

6. BOND HOT AND COLD WATER PIPING SYSTEMS.

KEY NOTES:

1. INSTALL GROUNDED (NEUTRAL) CONDUCTOR SAME SIZE AS THE LARGEST PHASE CONDUCTOR IF THE LINE-TO-NEUTRAL LOAD EXCEEDS 5% OF THE CONNECTED LOAD. IF NEUTRAL LOAD IS SMALLER, INSTALL THE NEC MINIMUM GROUNDED CONDUCTOR.

2. INSTALL GROUNDING ELECTRODE CONDUCTOR, SIZED BASED ON NEC TABLE 250.66 USING THE SERVICE PHASE CONDUCTOR SIZE, BUT NOT SMALLER THAN 4 AWG.

3. INSTALL EQUIPMENT GROUNDING CONDUCTOR SIZED BASED ON NEC TABLE 250.122 USING THE FEEDER OVERCURRENT DEVICE SIZE.

4. TABLE 250.122 USING THE FEEDER OVERCURRENT DEVICE SIZE.

5. INSTALL GROUNDING ELECTRODE CONDUCTOR THAT IS SIZED BASED ON NEC TABLE 250.66 USING THE SEPARATELY DERIVED SYSTEM PHASE CONDUCTOR SIZE.

6. INSTALL A CONCRETE-ENCASED MAIN GROUNDING ELECTRODE IN THE BUILDING FOUNDATION AROUND THE ENTIRE PERIMETER OF THE BUILDING. LOCATE ELECTRODE IN THE BOTTOM ONE-THIRD OF THE FOUNDATION WITH AT LEAST 3 INCHES OF CONCRETE COVER. USE EITHER OF THE FOLLOWING MATERIALS FOR THE ELECTRODE: EITHER OF THE FOLLOWING MATERIALS FOR THE ELECTRODE: BARE COPPER CABLE NOT SMALLER THAN THE GROUNDING ELECTRODE CONDUCTOR REQUIRED BY THE NEC AND NOT SMALLER THAN 4 AWG.

BARE OR GALVANIZED REBARS THAT ARE MADE ELECTRICALLY CONTINUOUS USING COPPER JUMPERS NOT SMALLER THAN THE NEC REQUIRED GROUNDING ELECTRODE CONDUCTOR AND NOT SMALLER THAN 4 AWG. USE REINFORCING BARS NOT SMALLER THAN THE FOLLOWING BASED ON THE TOTAL LENGTH OF THE INTERCONNECTED AND PARALLELED REBARS:

TOTAL LENGTH	MINIMUM REBAR SIZE
112 FT	1 3/8" (#11 BAR)
150 FT	1" (#8 BAR)
192 FT	3/4" (#6 BAR)
223 FT	5/8" (#5 BAR)
268 FT	1/2" (#4 BAR)

7. BOND EACH PERIMETER STRUCTURAL STEEL COLUMN TO THE CONCRETE-ENCASED MAIN GROUNDING ELECTRODE. USE COMPRESSION CONNECTORS THAT MEET IEEE 837 REQUIREMENTS OR USE EXOTHERMIC WELDS.

8. INSTALL A "MAIN GROUND ELECTRODE GROUND BAR" FOR SINGLE POINT GROUNDING. LOCATE AT AN ACCESSIBLE AND VISIBLE POINT NEAR THE SERVICE ENTRANCE EQUIPMENT. MAKE CONNECTIONS TO THE GROUND BAR USING TWO-HOLE COMPRESSION SPADE LUGS THAT MEET IEEE 837 REQUIREMENTS. LABEL EACH CONNECTION TO THE GROUND BAR.

9. LIGHTNING PROTECTION GROUNDING COUNTERPOISE - 4/0 AWG COPPER.

10. BOND THE LIGHTNING PROTECTION SYSTEM GROUNDING COUNTERPOISE TO THE MAIN GROUND ELECTRODE GROUND BAR. USE 4/0 AWG COPPER CABLE WITH 600 VOLT INSULATION. AT THE UNDERGROUND CONNECTION USE A COMPRESSION CONNECTOR THAT MEETS IEEE 837 REQUIREMENTS OR USE AN EXOTHERMIC WELD.

11. USE THE "MAIN GROUNDING ELECTRODE GROUND BAR" INSTEAD OF BUILDING STRUCTURAL STEEL IF THE FIRST OVERCURRENT DEVICE FOR THE SEPARATELY DERIVED SYSTEM IS WITHIN 50 FEET OF THE "MAIN GROUNDING ELECTRODE GROUND BAR".

12. INSTALL A COPPER GROUNDING BAR IN TELECOMMUNICATIONS ROOM. CONNECT TO THE "MAIN GROUNDING ELECTRODE GROUND BAR" USING 600V INSULATED 4/0 AWG COPPER CABLE AND COMPRESSION SPADE LUGS.

13. INSTALL GROUNDED (NEUTRAL) CONDUCTOR THAT IS NOT LESS THAN THE PHASE CONDUCTOR AMPACITY. IF HIGH-HARMONICS ARE PRESENT MAKE NEUTRAL AMPACITY 200% OF THE PHASE CONDUCTOR.

14. INSTALL BONDING CONDUCTOR THAT IS SIZED BASED ON NEC TABLE 250.122 USING THE GROUNDING OF EQUIPMENT CONDUCTOR SIZE.

15. INSTALL IRREVERSIBLE COMPRESSION CONNECTOR WITH TAMPER-PROOF HARDWARE OR INSTALL EXOTHERMIC WELD.

16. BOND TO METAL PIPING SYSTEMS IN THE AREA SERVED BY THE SEPARATELY DERIVED SYSTEM.

17. INSTALL BONDING JUMPER THAT IS SIZED BASED ON NEC TABLE 250.66 USING THE LARGEST SERVICE OR SEPARATELY DERIVED SYSTEM PHASE CONDUCTOR.

18. INSTALL BONDING JUMPER THAT IS SIZED BASED ON NEC SECTION 250 TO GROUNDING POINTS.

DESIGN AGENCY
PRIME AE
540 White Pond Drive, Ste. E
Akron, Ohio 44320
(330)-864-7755

NO.	REVISIONS	BY	DATE
1	ADDENDUM No.2	CK	5/12/20

DESIGNED RNS | DRAWN RNS | CHECKED CEK | IN CHARGE CEK

GROUNDING DETAIL

TOLL PLAZA 49

LUCAS COUNTY

PROJECT 58-20-01

DATE: 04/22/2020

E117

OHIO TURNPIKE AND INFRASTRUCTURE COMMISSION

5/12/2020 2:31:05 PM

Project Name

PANEL: CP1

Location: Space 316
Supply From: MDP
Mounting: SURFACE
Enclosure: NEMA -1

Volts: 120/208 Wye
Phases: 3
Wires: 4

Mains Type: MCB
Bus Rating: 225 A

MCB SIZE: 225A
A.I.C. Rating: 10KA

CKT	Circuit Description	Trip	Poles	A		B		C		Poles	Trip	Circuit Description	CKT
1	FIRE ALARM PANEL	20 A	1	1000 VA	400 VA					1	20 A	1-6 RM RECEP #1	2
3	1-6 RM RECEP #2	20 A	1			400 VA	2000 VA			2	30 A	RECEP 6-30 SERVER CABS 1	4
5	ACCESS CONTROL PANEL	20 A	1					1000 VA	2000 VA	--	--	--	6
7	LANE CONTROL LIGHTS (1-3)	20 A	1	600 VA	2000 VA					2	30 A	RECEP 6-30 SERVER CABS 2	8
9	LANE CONTROL LIGHTS (4-5)	20 A	1			400 VA	2000 VA			--	--	--	10
11	COM ENCLOSURE	20 A	1					500 VA	2000 VA	2	30 A	RECEP 6-30 SERVER CABS 3	12
13	SPARE	20 A	1	0 VA	2000 VA					--	--	--	14
15	SPARE	20 A	1			0 VA	0 VA			3	30 A	SPD	16
17	SPARE	20 A	1					0 VA	0 VA	--	--	--	18
19	SPARE	20 A	1	0 VA	0 VA					--	--	--	20
21	SPARE	20 A	1			0 VA	2000 VA			2	30 A	RECEP 6-30 SERVER CABS 4	22
23	SPARE	20 A	1					0 VA	2000 VA	--	--	--	24
25	SPARE	20 A	1	0 VA	0 VA					1	20 A	SPARE	26
27	SPARE	20 A	1			0 VA	0 VA			1	20 A	SPARE	28
29	SPARE	20 A	1					0 VA	0 VA	1	20 A	SPARE	30
31	SPARE	20 A	1	0 VA	0 VA					1	20 A	SPARE	32
33	SPARE	20 A	1			0 VA	0 VA			1	20 A	SPARE	34
35	SPARE	20 A	1					0 VA	0 VA	1	20 A	SPARE	36
37	SPARE	20 A	1	0 VA	0 VA					1	20 A	SPARE	38
39	SPARE	20 A	1			0 VA	0 VA			1	20 A	SPARE	40
41	SPARE	20 A	1					0 VA	0 VA	1	20 A	SPARE	42
			Total Load:	6000 VA		6800 VA		7500 VA					

Notes:

Panel Totals

Total Connected Load:	19300 VA	**Total Connected Current:**	54 A
Total Estimated Demand:	16150 VA	**Total Estimated Design Current:**	45 A

1

1

5/12/2020 2:31:44 PM

Project Name

DESIGN AGENCY
PRIME AE
540 White Pond Drive, Ste. E
Akron, Ohio 44320
(330)-864-7755

NO.	REVISIONS	BY	DATE
1	ADDENDUM No.2	CK	5/12/20

CHECKED CEK
IN CHARGE CEK
DESIGNED RNS
DRAWN RNS

PANEL SCHEDULE CP1
TOLL PLAZA 49
LUCAS COUNTY

PROJECT 58-20-01
DATE: 04/22/2020

E122

172
202

OHIO TURNPIKE AND INFRASTRUCTURE COMMISSION

PANEL: SBP

Location: Space 221
Supply From: MDP
Mounting: SURFACE
Enclosure: NEMA-1

Volts: 120/208 Wye
Phases: 3
Wires: 4

Mains Type: MCB
Bus Rating: 400 A

MCB SIZE: 400A
A.I.C. Rating: 10KA

CKT	Circuit Description	Trip	Poles	A		B		C		Poles	Trip	Circuit Description	CKT
1	OUTSIDE LIGHTS & PC,LC	20 A	1	546 VA	291 VA					1	20 A	EF-2, 2-1, 2-4 RM LIGHTS	2
3	2-3, 2-7, 2-8, 2-9 RM LIGHTS	20 A	1			564 VA	160 VA			1	20 A	ELEV 2-2 RM LIGHTS	4
5	2-3, OUTSIDE RECEP	20 A	1					400 VA	2000 VA	1	20 A	OUTSIDE, 2-1, 2-2, 2-4 RECEP	6
7	2-8, 2-9 RECEP	20 A	1	400 VA	2080 VA					2	30 A	ACCU-3 / AC-3	8
9	ACCU-4 / AC-4	20 A	2			1768 VA	2080 VA			--	--	--	10
11	--	--	--					1768 VA	373 VA	1	20 A	ESP-1	12
13	EWH-3	20 A	2	1500 VA	1500 VA					2	20 A	EWH-4, EWH-5	14
15	--	--	--			1500 VA	1500 VA			--	--	--	16
17	2-7 RM RECEP	20 A	1					400 VA	600 VA	1	20 A	2-10 RECEP	18
19	ELEVATOR CAB LIGHT 2-7 RM	20 A	1	800 VA	2000 VA					2	30 A	RECEP 6-30 SERVER CABS	20
21	2-8 RECEP	20 A	1			600 VA	2000 VA			--	--	--	22
23	ELEVATOR 2-2	100 A	3					6934 VA	1000 VA	1	20 A	ACCESS CONTROL PANEL	24
25	--	--	--	6934 VA	400 VA					1	20 A	ELEVATOR PIT RECEP	26
27	--	--	--			6934 VA	600 VA			1	20 A	GANTRY (9-12)	28
29	BOOTH B9	100 A	3					4979 VA	5179 VA	3	100 A	BOOTH B10	30
31	--	--	--	4769 VA	4769 VA					--	--	--	32
33	--	--	--			5094 VA	5094 VA			--	--	--	34
35	BOOTH B11	100 A	3					5179 VA	0 VA	1	20 A	SPARE	36
37	--	--	--	4769 VA	0 VA					3	30 A	SPD	38
39	--	--	--			5094 VA	0 VA			--	--	--	40
41	COM ENCLOSURE	20 A	1					500 VA	0 VA	--	--	--	42
43	GATE G-3	20 A	1	373 VA	373 VA					1	20 A	GATE G-4	44
45	SPARE	20 A	1			0 VA	1000 VA			1	20 A	FIRE ALARM	46
47	SPARE	20 A	1					0 VA	2000 VA	2	30 A	RECEP 6-30 SERVER CABS	48
49	SPARE	20 A	1	0 VA	2000 VA					--	--	--	50
51	SPARE	20 A	1			0 VA	0 VA			2	20 A	CIRCUIT ROADWAY LIGHTING	52
53	SPACE	--	--					0 VA	0 VA	--	--	--	54
55	SPACE	--	--	0 VA	0 VA					2	20 A	CIRCUIT ROADWAY LIGHTING	56
57	SPACE	--	--			0 VA	0 VA			--	--	--	58
59	SPACE	--	--					0 VA	0 VA	2	20 A	CIRCUIT ROADWAY LIGHTING	60
61	SPACE	--	--	0 VA	0 VA					--	--	--	62
63	SPACE	--	--			0 VA	0 VA			1	20 A	SPARE	64
65	SPACE	--	--					0 VA	0 VA	1	20 A	SPARE	66
67	SPACE	--	--	0 VA	0 VA					--	--	SPACE	68
69	SPACE	--	--			0 VA	0 VA			--	--	SPACE	70
71	SPACE	--	--					0 VA	0 VA	--	--	SPACE	72
73	SPACE	--	--	0 VA	0 VA					--	--	SPACE	74
75	SPACE	--	--			0 VA	0 VA			--	--	SPACE	76
77	SPACE	--	--					0 VA	0 VA	--	--	SPACE	78
79	SPACE	--	--	0 VA	0 VA					--	--	SPACE	80
81	SPACE	--	--			0 VA	0 VA			--	--	SPACE	82
83	SPACE	--	--					0 VA	0 VA	--	--	Space	84
			Total Load:	33503 VA		33987 VA		31312 VA					

1

Notes:

Panel Totals

Total Connected Load:	87252 VA	**Total Connected Current:**	242 A
Total Estimated Demand:	86069 VA	**Total Estimated Design Current:**	239 A

DESIGN AGENCY
PRIME AE
540 White Pond Drive, Ste. E
Akron, Ohio 44320
(330)-864-7755

NO.	REVISIONS	BY	DATE
1	ADDENDUM No.2	CK	5/12/20

DESIGNED RNS
DRAWN RNS
CHECKED CEK
IN CHARGE CEK

PANEL SCHEDULE SBP
TOLL PLAZA 49
LUCAS COUNTY

PROJECT 58-20-01
DATE: 04/22/2020

E123

173
202

OHIO TURNPIKE AND INFRASTRUCTURE COMMISSION

5/12/2020 2:32:04 PM

Project Name

TYPICAL PANEL: BOOTH B1

Location: Space 270
Supply From: MDP
Mounting: SURFACE
Enclosure: NEMA -1

Volts: 120/208 Wye
Phases: 3
Wires: 4

Mains Type: MCB
Bus Rating: 100 A

MCB SIZE: 100A
A.I.C. Rating: 10KA

CKT	Circuit Description	Trip	Poles	A		B		C		Poles	Trip	Circuit Description	CKT
1	K FIXTURE CANOPY BOOTH	20 A	1	60 VA	1352 VA					1	20 A	ACCU-5/AC-5	2
3	CAMERA	20 A	1			800 VA	1352 VA			1	20 A	--	4
5	GATE OPERATOR	20 A	1					800 VA	800 VA	1	20 A	DMS CONTROLLER	6
7	DMS	20 A	1	800 VA	100 VA					1	20 A	LIGHT FIXTURE	8
9	SPARE	20 A	1			0 VA	0 VA			1	20 A	SPARE	10
11	SPARE	20 A	1					0 VA	1000 VA	1	20 A	ATPM	12
13	UPS RECEP	20 A	1	1000 VA	0 VA					1	20 A	SPARE	14
15	SPARE	20 A	1			0 VA	750 VA			2	20 A	EWH-6	16
17	SF-1	20 A	1					77 VA	750 VA	--	--	--	18
19	DH-1	20 A	3	1667 VA	0 VA					1	20 A	SPARE	20
21	--	--	--			1667 VA	0 VA			1	20 A	SPARE	22
23	--	--	--					1667 VA	0 VA	1	20 A	SPARE	24
			Total Load:	4979 VA		4569 VA		5094 VA					

Notes:

Panel Totals

Total Connected Load:	9641 VA	**Total Connected Current:**	27 A
Total Estimated Demand:	9641 VA	**Total Estimated Design Current:**	27 A

1

DESIGN AGENCY
PRIME AE
540 White Pond Drive, Ste. E
Akron, Ohio 44320
(330)-864-7755

NO.	REVISIONS	BY	DATE
1	ADDENDUM No.2	CK	5/12/20

DESIGNED RNS
DRAWN RNS
CHECKED CEK
IN CHARGE CEK

TYPICAL PANEL SCHEDULE BOOTH

LUCAS COUNTY

TOLL PLAZA 49

PROJECT 58-20-01
DATE: 04/22/2020

E124

174
202

OHIO TURNPIKE AND INFRASTRUCTURE COMMISSION

Project Name 5/12/2020 2:32:30 PM

PANEL: PB-M1

Location: Space 129
Supply From: MDP
Mounting: SURFACE
Enclosure: NEMA-1

Volts: 120/208 Wye
Phases: 3
Wires: 4

1

Mains Type: MCB
Bus Rating: 60 A

MCB SIZE: 60A
A.I.C. Rating: 10K

CKT	Circuit Description	Trip	Poles	A		B		C		Poles	Trip	Circuit Description	CKT
1	ROADWAY LIGHTING (FUTURE)	20 A	2	0 VA	0 VA					2	20 A	ROADWAY LIGHTING (FUTURE)	2
3	--	--	--			0 VA	0 VA			--	--	--	4
5	ROADWAY LIGHTING (FUTURE)	20 A	2					0 VA	0 VA	2	20 A	ROADWAY LTG (FUTURE)	6
7	--	--	--	0 VA	0 VA					--	--	--	8
9	ROADWAY LIGHTING (FUTURE)	20 A	2			0 VA	0 VA			2	20 A	ROADWAY LIGHTING (FUTURE)	10
11	--	--	--					0 VA	0 VA	--	--	--	12
13	ROADWAY LIGHTING (FUTURE)	20 A	2	0 VA	0 VA					2	20 A	ROADWAY LIGHTING (FUTURE)	14
15	--	--	--			0 VA	0 VA			--	--	--	16
17	ROADWAY LIGHTING (FUTURE)	20 A	2					0 VA	0 VA	2	20 A	ROADWAY LIGHTING (FUTURE)	18
19	--	--	--	0 VA	0 VA					--	--	--	20
21	SPACE	--	--			0 VA	0 VA			--	--	SPACE	22
23	SPACE	--	--					0 VA	0 VA	--	--	SPACE	24
25	SPACE	--	--	0 VA	0 VA					--	--	SPACE	26
27	SPACE	--	--			0 VA	0 VA			--	--	SPACE	28
29	SPACE	--	--					0 VA	0 VA	--	--	SPACE	30
31	SPACE	--	--	0 VA	0 VA					--	--	SPACE	32
33	SPACE	--	--			0 VA	0 VA			--	--	SPACE	34
35	SPACE	--	--					0 VA	0 VA	--	--	SPACE	36
37	SPACE	--	--	0 VA	0 VA					--	--	SPACE	38
39	SPACE	--	--			0 VA	0 VA			--	--	SPACE	40
41	SPACE	--	--					0 VA	0 VA	--	--	SPACE	42
			Total Load:	0 VA		0 VA		0 VA					

Notes:

Panel Totals

Total Connected Load:	0 VA	**Total Connected Current:**	0 A
Total Estimated Demand:	0 VA	**Total Estimated Design Current:**	0 A

5/12/2020 2:32:52 PM

Project Name

DESIGN AGENCY
PRIME AE
540 White Pond Drive, Ste. E
Akron, Ohio 44320
(330)-864-7755

NO.	REVISIONS	BY	DATE
1	ADDENDUM No.2	CK	5/12/20

DESIGNED Designer
DRAWN Author
CHECKED Checker
IN CHARGE Approver

PANEL SCHEDULE PB-M1

LUCAS COUNTY

TOLL PLAZA 49

PROJECT 58-20-01
DATE: 04/22/2020

E125

OHIO TURNPIKE AND INFRASTRUCTURE COMMISSION

LIGHTING FIXTURE SCHEDULE

TYPE	DESCRIPTION	MOUNTING	LAMPS NO.	LAMPS WATTS	LAMPS TYPE	MANUFACTURE & CATALOG NO.
A	HANGING 48"X3.4" LED STRIP FIXTURE. ROLLED STEEL BODY WITH ACRYLIC LENS.	SUSPENDED @ 9'-0" AFF	1	25	LED	LITHONIA CLX L48 4000LM RDL MVOLT EZ1 40K ZACH (OR EQUAL)
B	2'X2' LED FIXTURE WITH ALUMINUM AND/OR STEEL FULL BODY CONSTRUCTION, WHITE ENAMEL POLYESTER FINISH, FULL 2'X2' SATIN WHITE LENS.	RECESSED	1	36	LED	LITHONIA 2GTL 2 F33L SWL EZ1 LP840
B1	2'X2' LED FIXTURE WITH FLANGE TRIM (TOLLBOOTHS). ALUMINUM AND/OR STEEL FULL BODY CONSTRUCTION, WHITE ENAMEL POLYESTER FINISH, FULL 2'X2' SATIN WHITE LENS.	RECESSED	1	36	LED	LITHONIA 2GTL 2 33L SWL EZ1 LP840 (OR EQUAL)
C	6" RECESSED LED DOWNLIGHT WITH CLEAR SEMI-SPECULAR APERTURE AND TRIM, 3500K CCT, 2500 LUMENS, 0-10 DIMMING	RECESSED	1	27	LED	LITHONIA LIGHTING: LDN6 35/25 LO6AR LSS MVOLT EZ10
C1	6" RECESSED LED DOWNLIGHT WITH CLEAR SEMI-SPECULAR APERTURE AND TRIM, 3500K CCT, 2500 LUMENS, 0-10 DIMMING WITH WET LOCATION OPTION	RECESSED	1	27	LED	LITHONIA LIGHTING: LDN6 35/25 LO6AR LSS MVOLT EZ10 WL
D	EMERGENCY LITHIUM ION PHOSPATE BATTERY TYPE LIGHTING FIXTURE, 1100 LUMENS	WALL-MOUNTED @ 7'-6"AFF	1	10.6	LED	LITHONIA LIGHTING: ELM6L UVOLT LTP
FE	4' WRAPAROUND LED WRAPAROUND EMERGENCY LIGHT FIXTURE, 3500K CCT, 4000 LUMENS, 0-10 DIMMING	WALL-MOUNTED @ 7'-6"AFF	1	35	LED	LITHONIA LIGHTING: BLWP4 40L ADP GZ10 LP835
G	4' LED LINEAR LIGHT FIXTURE WITH POLYCARBONATE HOUSING AND GASKETED LENDS, 4000K CCT, 5000 LUMENS, UL LABELED FOR WET LOCATION	WALL-MOUNTED	1	49	LED	LITHONIA LIGHTING: XVML L48 5000LM MVOLT 40K
H	ARCHITECTURAL WALL SCONCE , 4000K CCT, 3000 LUMENS, UL LABELED FOR WET LOCATION	WALL-MOUNTED @ 8'-0"AFF	1	30	LED	LITHONIA LIGHTING: WST LED P2 40K VF MVOLT DBLXD
HE	ARCHITECTURAL WALL SCONCE , 4000K CCT, 3000 LUMENS, UL LABELED FOR WET LOCATION WITH EMERGENCY BATTERY PACK	WALL-MOUNTED @ 8'-0"AFF	1	30	LED	LITHONIA LIGHTING: WST LED P2 40K VF MVOLT E20WC DBLXD
J	RECESSED LED CANOPY FIXTURE WITH ALUMINUM HOUSING, EPDM GASKETING, ALL NECESSARY MTG. HARDWARE AND U.L. WET LOCATION LABEL	RECESSED IN CANOPY	1	80	LED	RAB LIGHTING MASI16-80-W-/D10
K	LED LANE CONTROL SIGNAL 20 X 20 X 4.25	CANOPY SEE ARCH DRAWINGS	1	RED X: 16, GREEN ARROW: 18	(2) TRAFFIC SIGNAL LAMPS - LED	FURNISHED BY OTHERS AND CONTRACTOR INSTALLED
PL	PYLON FLASHING YELLOW TRAFFIC LIGHT WITH AMBER LENS AND CUT AWAY VISOR	ON TOP OF PYLON	1	14	(1) TRAFFIC SIGNAL LAMPS - LED	GE 8" LED SIGNAL MODULE DR4-YTFB-20A & ECONOLITE 8" POLYCARBONATE YELLOW SIGNAL HOUSING EPE1VNNA11N122 (OR EQUAL)
X	EXIT SIGN	WALL MOUNTED	1	.8	LED	E-CONOLIGHT E.XPL2RBW(OR EQUAL)
X1	EXIT SIGN	CEILING MOUNTED	1	.8	LED	E-CONOLIGHT E.XPL2RBW(OR EQUAL)

NOTES:

1. ALL LIGHTING FIXTURES SHALL BE 120V UNLESS OTHERWISE NOTED.
2. CONTRACTOR SHALL PROVIDE LAMPS IN ALL LIGHTING FIXTURES.
3. ALL LIGHTING FIXTURES ARE SPECIFIED AS INDICATED ON SCHEDULE OR APPROVED EQUAL.
4. ALL OUTDOOR LIGHTING FIXTURES SHALL BE U.L. LISTED FOR WET LOCATIONS, UNLESS OTHERWISE NOTED.

OCCUPANCY SENSOR SCHEDULE

MOTION SENSOR TYPE	CATALOG NUMBER	MANUFACTURER	VOLTAGE	MOUNTING	REMARKS
OS2	LOS-CDT-XXXX-WH	LUTRON OR EQUAL	120V	MOUNT ON CEILING	SEE NOTES 2 & 3
OS1	LOS-CDT-XXXX-WH	LUTRON OR EQUAL	120V	MOUNT ON CEILING LOWER THAN OBSTRUCTIONS	SEE NOTES 2 & 3
$	NTGRX-IS-WH	LUTRON OR EQUAL	120V	MOUNT ON WALL 42" A.F.F.	SEE NOTES 2

NOTES:

1. ALL SENSORS ARE DUAL TECHNOLOGY (PASSIVE INFRARED AND ULTRASONIC)
2. WIRE TO LUTRON PACK MODEL* PP-DV-M (OR EQUAL) MOUNTED TO JUNCTION BOX WITH MANUAL INPUT VIA 24V DC CLASS 2 LOW VOLTAGE WIRING.
3. COVERAGE RANGE AND ANGLE SHALL MEET THE REQUIREMENTS OF THE SENSOR. SPACING ON THE PLANS. MODEL NUMBER SHALL REFLECT COVERAGE RANGE AND ANGLE.

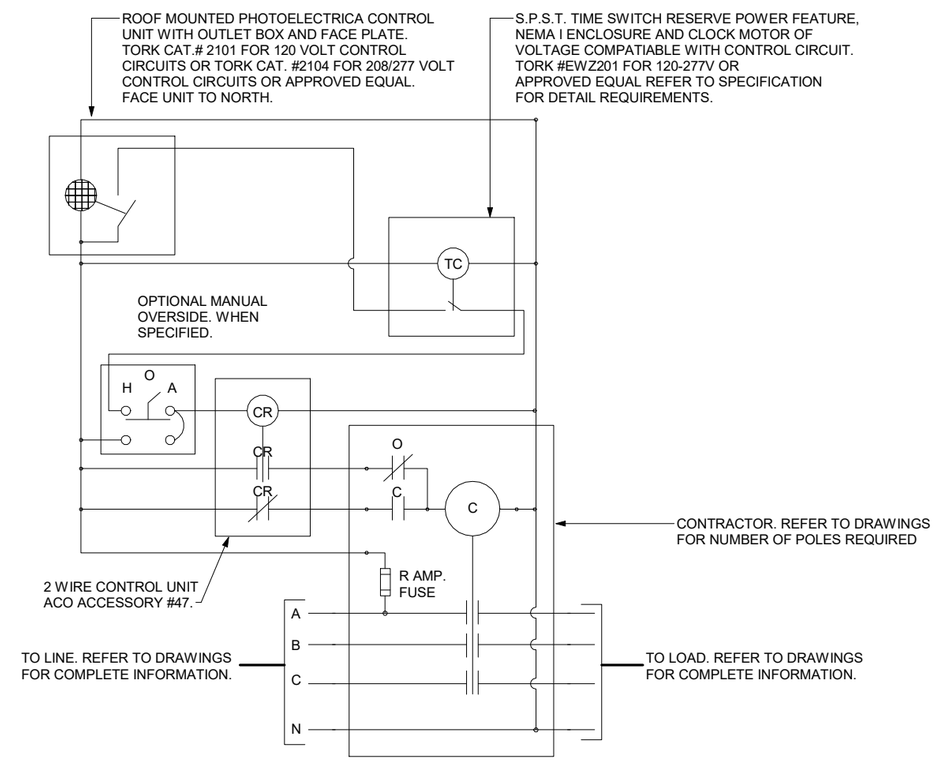

PHOTO-CELL AND TIME SWITCH CONTROL DETAIL

2 E126

SCALE: N.T.S.

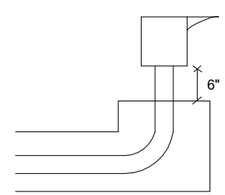

PYLON FLASHING LIGHT

3 E126

SCALE: N.T.S.

DESIGN AGENCY
PRIME AE
540 White Pond Drive, Ste. E
Akron, Ohio 44320
(330)-864-7755

NO.	REVISIONS	BY	DATE
1	ADDENDUM No.2	CK	5/12/20

DESIGNED RNS
DRAWN RNS
CHECKED CEK
IN CHARGE CEK

LIGHT FIXTURE SCHEDULE

TOLL PLAZA 49

LUCAS COUNTY

PROJECT 58-20-01
DATE: 04/22/2020

E126

176
202

OHIO TURNPIKE AND INFRASTRUCTURE COMMISSION

5/12/2020 2:34:27 PM

Project Name

NOTES:

1. THE READER CABINET SHALL BE PROVIDED BY THE INTEGRATOR AND INSTALLED BY THE 58-20-01 CONTRACTOR.
2. BALLARDS SHALL BE 4" DIA GALVANIZED PIPE 5' OUT OF THE GROUND AND 42" IN THE GROUND EMBEDDED IN CONCRETE (12" DIA) 1

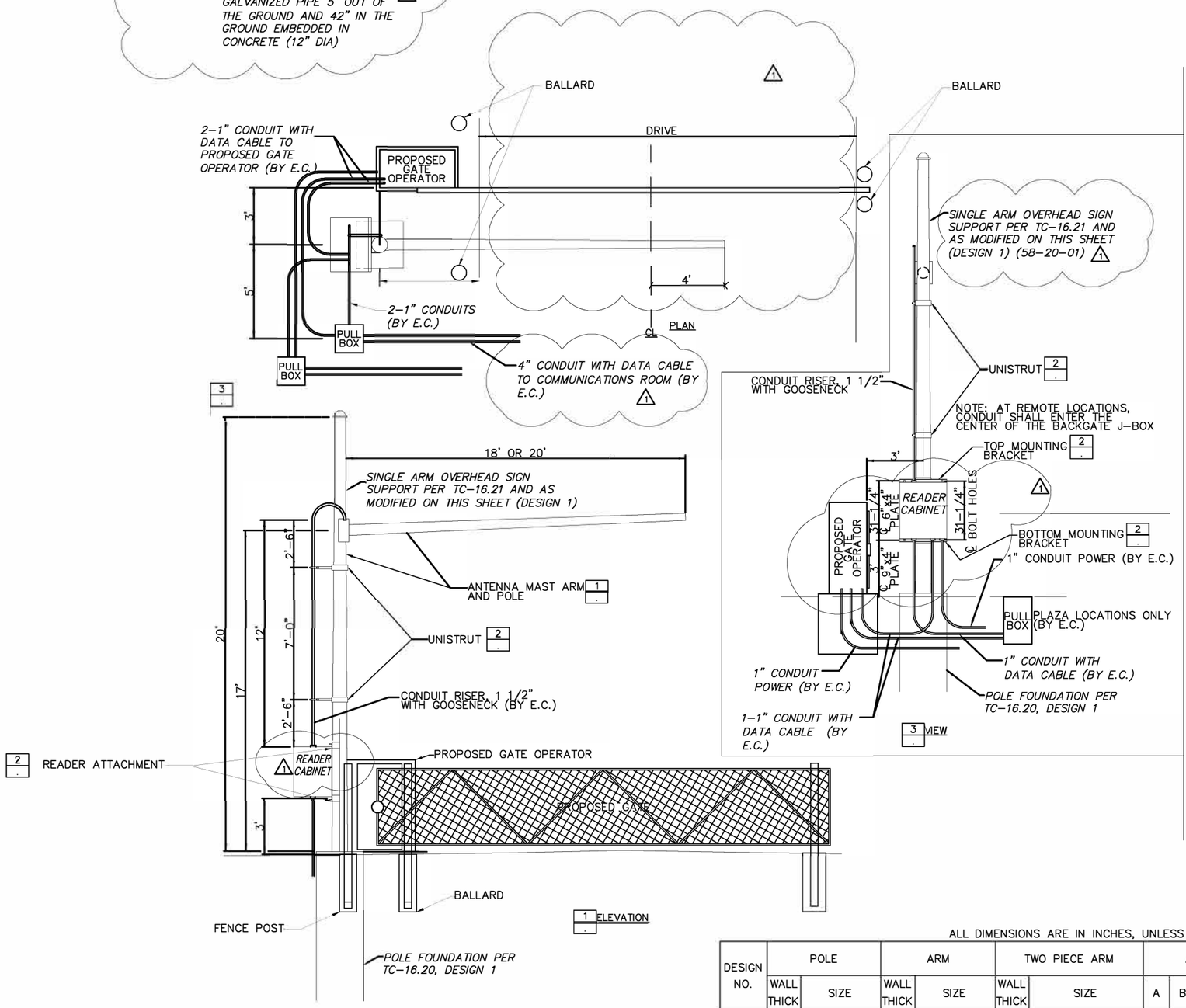

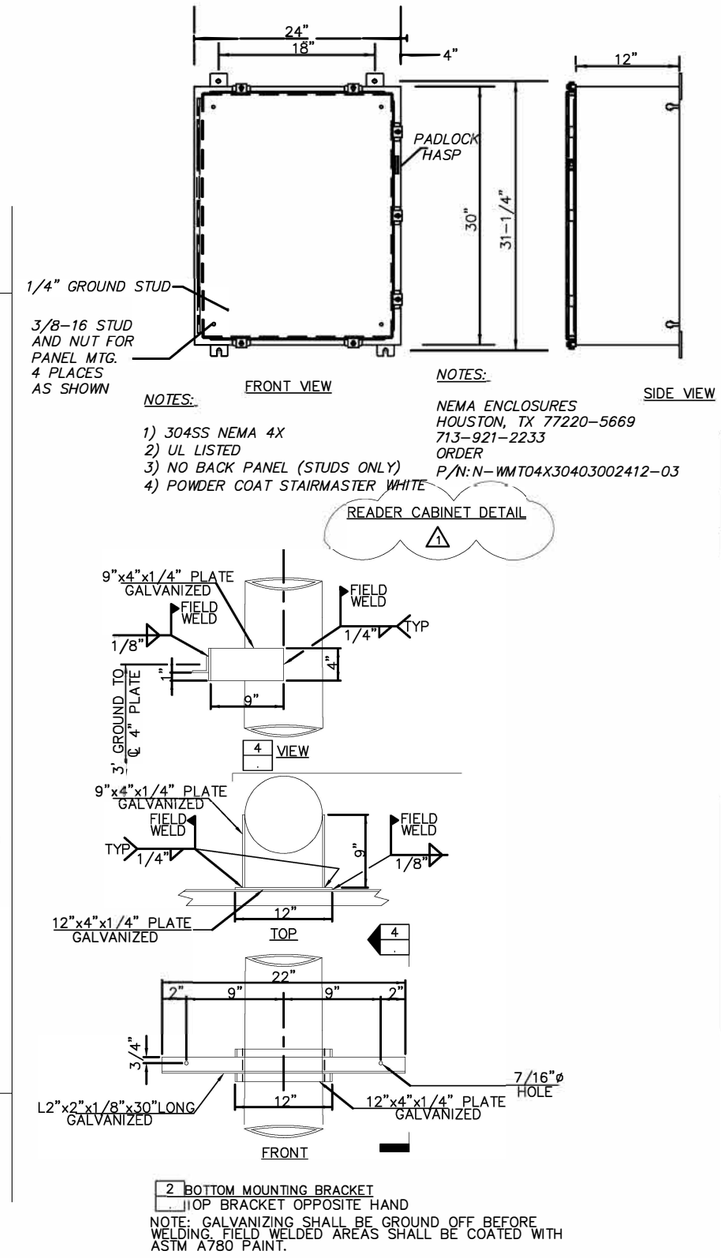

2 BOTTOM MOUNTING BRACKET
TOP BRACKET OPPOSITE HAND

NOTE: GALVANIZING SHALL BE GROUND OFF BEFORE WELDING, FIELD WELDED AREAS SHALL BE COATED WITH ASTM A780 PAINT.

ALL DIMENSIONS ARE IN INCHES, UNLESS OTHERWISE NOTED.

DESIGN NO.	POLE		ARM		TWO PIECE ARM		ARM ATTACHMENT							ANCHOR BASE					ANCHOR BOLT	
	WALL THICK	SIZE	WALL THICK	SIZE	WALL THICK	SIZE	A	B	C	D	E	F	G	BOLT CIRCLE	S	J	T	H	DIA.	L
1	.179	10X7.20X20'	.179	7X4.76X16'			14-1/2	12	10-1/2	8	1-1/4	1-1/4	1-1/4	13-1/2	14-1/8	9-9/16	1-1/2	1-3/4	1-1/2	54

READER CABINET SUPPORT POLE DETAILS

1 / E129 GATE DETAIL
SCALE: N.T.S.

DESIGN AGENCY
PRIME AE
540 White Pond Drive, Ste. E
Akron, Ohio 44320
(330)-864-7755

NO.	REVISIONS	BY	DATE
1	ADDENDUM No. 2	CK	5/1/20

DESIGNED RNS | CHECKED CEK
DRAWN RNS | IN CHARGE CEK

GATE DETAIL

LUCAS COUNTY
TOLL PLAZA 49

PROJECT 58-20-01
DATE: 04/22/2020

E131

181 / 202

OHIO TURNPIKE AND INFRASTRUCTURE COMMISSION

GENERAL NOTES

1. SEE ELECTRICAL, STRUCTURAL, MECHANICAL, CIVIL, AND ARCHITECTURAL DRAWINGS FOR ADDITIONAL INFORMATION.
2. THE CONTACT DRAWINGS INDICATE THE GENERAL ARRANGEMENT FOR THE COMMUNICATIONS AND SECURITY SYSTEMS.
3. DRAWINGS ARE DIAGRAMMATIC AND DO NOT INDICATE NECESSARY OFFSETS, OBSTRUCTIONS, OR STRUCTURAL CONDITIONS.
4. ALL WORKING SHALL CONFORM TO REQUIREMENTS OF THE SPECIFICATIONS, CONTRACT DRAWINGS, LATEST EDITION OF THE NFPA, THE NATIONAL ELECTRICAL SAFETY CODE (NESC) AND THE REGULATIONS OF OTHER AUTHORITIES HAVING JURISDICTION.
5. CONDUITS, JUNCTION BOXES AND OTHER EQUIPMENT INSTALLED SHALL NOT INTERFERE WITH THE OPERATION OF WINDOWS, DOOR, ETC.
6. CAREFULLY CHECK SPACE REQUIREMENTS, INCLUDING SERVICING SPACE REQUIREMENTS, TO ENSURE THAT ALL EQUIPMENT AND MATERIALS CAN BE INSTALLED IN SPACES ALLOTTED THERETO, AND MEETS N.E.C. REQUIREMENTS FOR WORKING CLEARANCE.
7. COMMUNICATION AND SECURITY CABLES SHALL BE INSTALLED IN CONFORMANCE WITH SPECIFICATIONS.
8. GROUNDED SYSTEM FOR COMMUNICATION AND SECURITY ENCLOSURES , CABINETS, EQUIPMENT, JUNCTION BOXES AND ANY OTHER EQUIPMENT OR APPARATUS SHALL COMPLY WITH THE REQUIREMENTS OF THE SPECIFICATIONS.
9. PROVIDED ALL CORE DRILLS NECESSARY FOR COMMUNICATION AND POWER CONDUIT ROUTING, PROPERLY SEAL ALL PENETRATIONS. INSTALL FIRE STOPPING FOR CORE DRILLS WHERE REQUIRED BY CODE.
10. CABLES CONNECTING IP DEVICES TO THE SWITCHES ARE NOT TO EXCEED 328 FEET IN LENGTH, INCLUDING ALL PATCH/JUMPER CABLES.
11. INSTALL ETHERNET SURGE SUPPRESSOR ON CAT6 CABLE AT EACH END FOR EACH EXTERIOR DEVICE, GROUND ALL SURGE SUPPRESSORS.
12. ALL EXTERIOR DEVICES SHALL UTILIZE OUTSIDE PLANT RATED SHIELDED CATEGORY 6A-GEL FILLED CABLE WITH WATER BLOCKING UNLESS OTHERWISE SPECIFIED.
13. PROVIDE A GREEN INSULATED EQUIPMENT GROUNDING CONDUCTOR TO EACH PIECE OF COMMUNICATIONS AND SECURITY EQUIPMENT. PROVIDE A GROUND BAR ON EACH RACK, EACH RACK IS TO BE BE GROUNDED TO EARTH. RACK EQUIPMENT IS TO BE GROUNDED TO RACK. COMBINING GROUNDING CONDUCTORS, OR THE USE OF CONDUIT AS AN EQUIPMENT, COMBINING GROUNDING CONDUCTORS, OR THE USE OF CONDUIT AS AN EQUIPMENT GROUND, SHALL NOT BE PERMITTED.
14. ALL METALLIC CONDUITS AND RACEWAYS SHALL BE ELECTRICALLY CONTINUOUS AND GROUNDED.
15. CONTRACTOR TO PROVIDE ALL WIRING DEVICES REQUIRED BY N.E.C. INCLUDING, BUT NOT LIMITED TO DISCONNECT SWITCHES, ETC.
16. ALL DEVICES SHALL BE NETWORKED AND POE POWERED UNLESS OTHERWISE SPECIFIED. IP CAMERAS SHALL COMPLY TO IEEE 802.3AF. INCLUDE A HARDENED POE POWER BOOSTER TO ACHIEVE REQUIRED POWER , OR POWER THE CAMERA FROM A SEPARATE CAMERA POWER SUPPLY (PROVIDED THERE IS SUFFICIENT SPACE FOR POWER SUPPLY INSTALLATION).
17. 8'H X 4'W X 3/4 T GRADE ACX PAINTED PLYWOOD SHALL BE PLACED ON DESIGNATED WALL OF THE COMMUNICATIONS ROOM. PLYWOOD SHALL BE PAINTED TWO COATS OF FIRE RETARDANT WHITE PAINT.
18. INSTALL CABLE TRAY WITH MINIMAL 12" CLEARANCE ABOVE AND ON ONE SIDE OF TRAY. TRAY SHALL HAVE A MINIMAL 3" CLEARANCE BELOW WHEN PLACED ABOVE LIGHTING FIXTURES OR ABOVE ACCESSIBLE CEILING SPACE.
19. BACK BOXES INSTALLED FOR COMMUNICATIONS DATA AND VOICE WIRING TERMINATION SHALL BE SINGLE GANG OUTLET BOXES TO ALLOW FOR THE REQUIRED WORKING CLEARANCE OF THE CAT6 CABLE. THESE BOXES SHALL BE SEPARATE FROM ELECTRICAL JUNCTION BOXES AND BE EXCLUSIVELY FOR DATA AND VOICE COMMUNICATIONS.
20. THE NUMBER OF HORIZONTAL CABLES PLACED IN A CABLE SUPPORT OR PATHWAY SHALL BE LIMITED TO A NUMBER OF CABLES THAT WILL NOT CAUSE THE GEOMETRIC SHAPE OF THE CABLES TO BE ALTERED UNDER NO CIRCUMSTANCES SHALL CABLES IN THE HORIZONTAL PATHWAY BE BUNDLED. THIS IS TO MINIMIZE "ALIEN" CROSS-TALK.
21. CONDUITS SHALL HAVE CONNECTORS, PROTECTIVE BUSHINGS, PULL STRINGS, AND SHALL BE GROUNDED.
22. ELECTRICAL CONTRACTOR SHALL ADHERE TO COMMERCIAL BUILDING STANDARD FOR TELECOMMUNICATIONS PATHWAYS SET FOURTH IN ANSI-TIA-569-C STANDARD.

ITS ABBREVIATIONS

AFC	ABOVE FINISHED CEILING	ITC	VOIP INTERCOM
AFF	ABOVE FINISHED FLOOR	NEC	NATIONAL ELECTRIC CODE
AFG	ABOVE FINISHED GRADE	PBX	PRIVATE BRANCH EXCHANGE
CAT6	CATEGORY 6 CABLE	POE	POWER OVER ETHERNET
CCTV	CLOSED CIRCUIT TELEVISION	PSIM	PHYSICAL SECURITY INFORMATION MANAGEMENT
CKT	CIRCUIT	SFP	SMALL FORM-FACTOR PLUGGABLE
CL	CENTERLINE	VOIP	VOICE OVER INTERNET PROTOCOL
DWG	DRAWING		
EACS	ELECTRONIC ACCESS CONTROL SYSTEM		

ITS LEGEND

SYMBOL	DESCRIPTION	MOUNTING HEIGHT
	TELECOMMUNICATIONS QUAD JACK FACEPLATE OUTLET	18"
	VOIP INTERCOM	4'-0" TO CL
	WALL MOUNTED TELEPHONE OUTLET	48" (1)
D	DOME FIXED IP CAMERA ## - CAMERA NUMBER	7'-6" TO TOP
	FIXED IP CAMERA ## - CAMERA NUMBER	SEE DETAIL ON I111
P	PAN/TILT/ZOOM IP CAMERA ## - CAMERA NUMBER	60' TO TOP
	180 DEGREE VIEW IP CAMERA ## - CAMERA NUMBER	7'-6" TO TOP
	PANELBOARD-SURAFCE MOUNTED	
	TELEPHONE EQUIPMENT BACKBOARD	2'-0" TO CL
	CONDUIT IN OR ABOVE CEILING OR WALL (NO. OF TICKS INDICATE NO. OF CONDUCT 2#12+1#12 GRD.-3/4" CONDUIT UNLESS OTHERWISE NOTED	
	HOMERUN TO PANEL, ARROW INDICATES NO. OF CIRCUITS (NO. OF TICKS INDICATE NO. OF CONDUCT 2#12+1#12 GRD.-3/4" CONDUIT UNLESS OTHERWISE NOTED	
	FLEXIBLE METAL CONDUIT CONCEALED IN CEILING OR WALL	
	CONDUIT IN OR BELOW FLOOR	
—T—	UNDERGROUND TELEPHONE CONDUIT/DUCTBANK	
J	JUNCTION BOX	
2	SEE DRAWING NOTE OF SAME NUMBER	
SP1 00	SECURE DIRECTION OF TRAVEL DOOR STYLE DOOR NUMBER	

DESIGN AGENCY
PRIME AE
540 White Pond Drive, Ste. E
Akron, Ohio 44320
(330)-864-7755

NO.	REVISIONS	BY	DATE
1	ADDENDUM No.2	CK	5/12/20

DESIGNED RNS | DRAWN RNS | CHECKED CEK | IN CHARGE CEK

ITS LEGEND. ABBREVIATIONS AND NOTES.
TOLL PLAZA 49 LUCAS COUNTY

PROJECT 58-20-01
DATE: 04/22/2020

I101

182
202

OHIO TURNPIKE AND INFRASTRUCTURE COMMISSION

5/12/2020 12:16:45 PM

Project Name

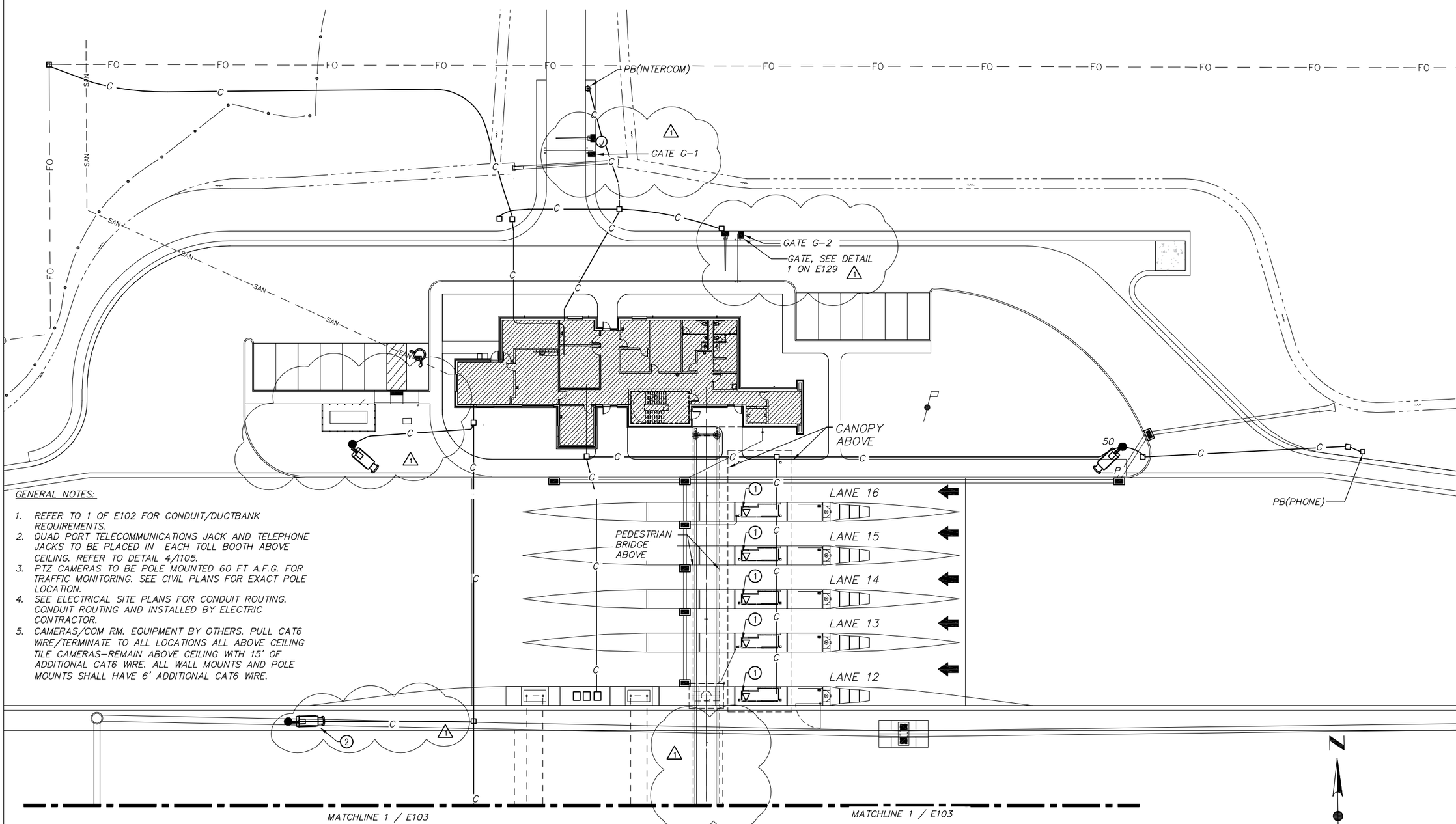

GENERAL NOTES:

1. REFER TO 1 OF E102 FOR CONDUIT/DUCTBANK REQUIREMENTS.
2. QUAD PORT TELECOMMUNICATIONS JACK AND TELEPHONE JACKS TO BE PLACED IN EACH TOLL BOOTH ABOVE CEILING. REFER TO DETAIL 4/I105.
3. PTZ CAMERAS TO BE POLE MOUNTED 60 FT A.F.G. FOR TRAFFIC MONITORING. SEE CIVIL PLANS FOR EXACT POLE LOCATION.
4. SEE ELECTRICAL SITE PLANS FOR CONDUIT ROUTING. CONDUIT ROUTING AND INSTALLED BY ELECTRIC CONTRACTOR.
5. CAMERAS/COM RM. EQUIPMENT BY OTHERS. PULL CAT6 WIRE/TERMINATE TO ALL LOCATIONS ALL ABOVE CEILING TILE CAMERAS–REMAIN ABOVE CEILING WITH 15' OF ADDITIONAL CAT6 WIRE. ALL WALL MOUNTS AND POLE MOUNTS SHALL HAVE 6' ADDITIONAL CAT6 WIRE.

KEY NOTES:

1. PROVIDE 4 CAT6 DROPS WITH A JACK.
2. PROVIDE CABLE TO DVAS CAMERA WITH 20' OF SLACK FOR TERMINATION BY 39–20–02 CONTRACTOR. THE POLE FOUNDATION, POLE, AND CONDUIT SHALL BE PROVIDED BY 39–20–02.

1 / I102 ITS OVERALL SITE PLAN
SCALE: 1' = 40'–0"

DESIGN AGENCY
PRIME AE
540 White Pond Drive, Ste. E
Akron, Ohio 44320
(330)-864-7755

NO.	REVISIONS	BY	DATE
1	ADDENDUM No. 2	CK	5/12/20
–	–	–	–

DESIGNED RNS
CHECKED CEK
DRAWN RNS
IN CHARGE CEK

LUCAS COUNTY

ITS SITE PLAN

TOLL PLAZA 49

PROJECT 58-20-01
DATE: 04/22/2020

I102

183
202

OHIO TURNPIKE AND INFRASTRUCTURE COMMISSION

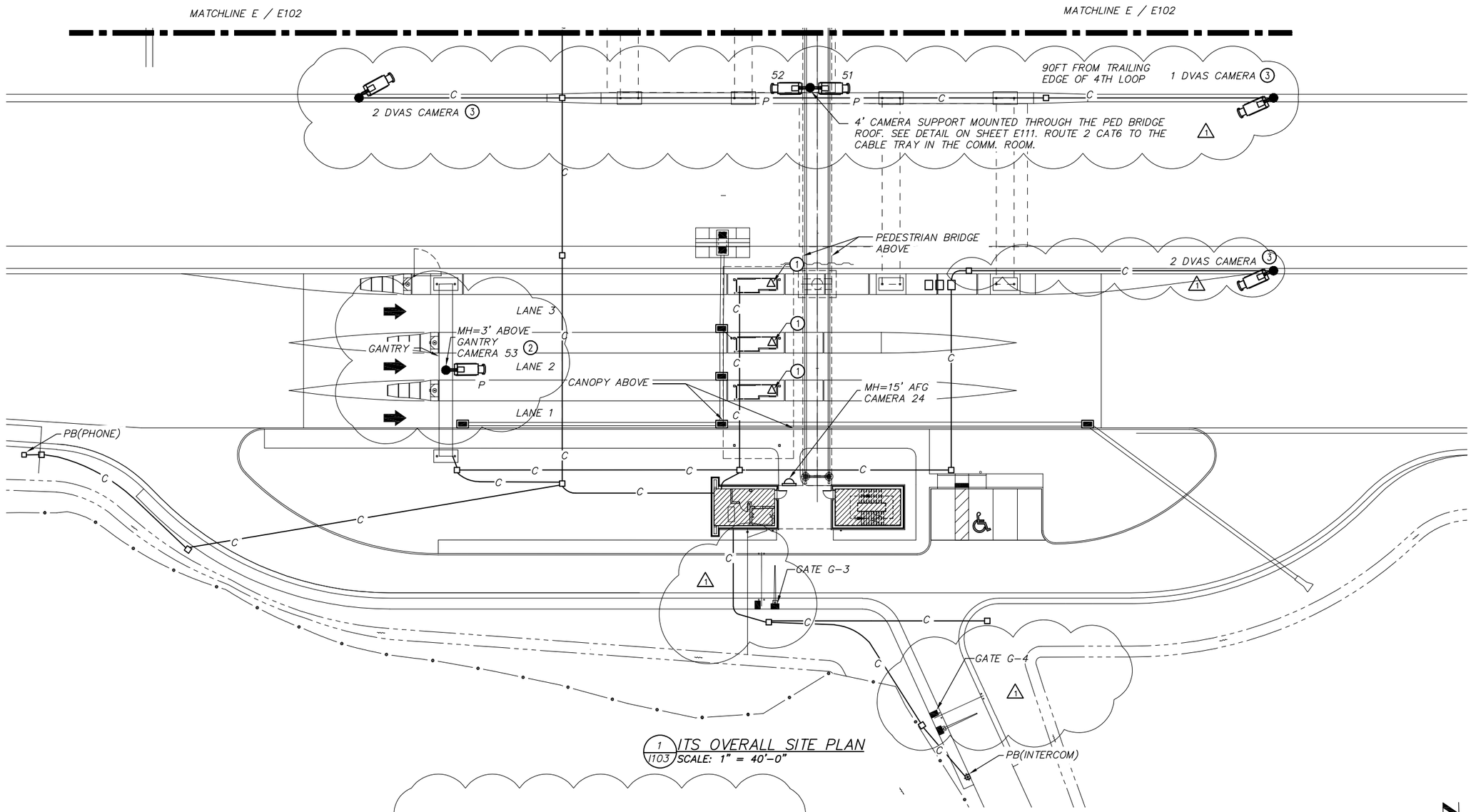

1 / 1103 ITS OVERALL SITE PLAN
SCALE: 1" = 40'-0"

GENERAL NOTES:

1. REFER TO 1 OF E103 FOR CONDUIT/DUCTBANK REQUIREMENTS.
2. QUAD PORT TELECOMMUNICATIONS JACK AND TELEPHONE JACKS TO BE PLACED IN EACH TOLL BOOTH ABOVE CEILING. REFER TO DETAIL 4/1105.
3. PTZ CAMERAS TO BE POLE MOUNTED 60 FT A.F.G. FOR TRAFFIC MONITORING. SEE CIVIL PLANS FOR EXACT POLE LOCATION.
4. SEE ELECTRICAL SITE PLANS FOR CONDUIT ROUTING. CONDUIT ROUTING AND INSTALLED BY ELECTRIC CONTRACTOR.
5. CAMERAS/COM RM. EQUIPMENT BY OTHERS. PULL CAT6 WIRE/TERMINATE TO ALL LOCATIONS ALL ABOVE CEILING TILE CAMERAS–REMAIN ABOVE CEILING WITH 15' OF ADDITIONAL CAT6 WIRE. ALL WALL MOUNTS AND POLE MOUNTS SHALL HAVE 6' ADDITIONAL CAT6 WIRE.

KEY NOTES:

1. PROVIDE 4 CAT6 DROPS WITH A JACK.
2. PROVIDE 2 PELCO–PN SP–5730 BRACKETS AND A 9'–2"ø GALVANIZED PIPE W/CAPS. ATTACH THE BRACKETS TO THE TOP AND BOTTOM CORD.
3. PROVIDE CABLE TO DVAS CAMERA WITH 20' OF SLACK FOR TERMINATION BY 39–20–02 CONTRACTOR. THE POLE FOUNDATION, POLE, AND CONDUIT SHALL BE PROVIDED BY 39–20–02.

N

0 20 40
HORIZONTAL SCALE IN FEET

DESIGN AGENCY
PRIME AE
540 White Pond Drive, Ste. E
Akron, Ohio 44320
(330)-864-7755

NO.	REVISIONS	BY	DATE
1	ADDENDUM No. 2	CK	5/12/20

DESIGNED RNS
CHECKED CEK
DRAWN RNS
IN CHARGE CEK

LUCAS COUNTY
ITS OVERALL SITE PLAN
TOLL PLAZA 49

PROJECT 58-20-01
DATE: 04/22/2020

I103

184
202

OHIO TURNPIKE AND INFRASTRUCTURE COMMISSION

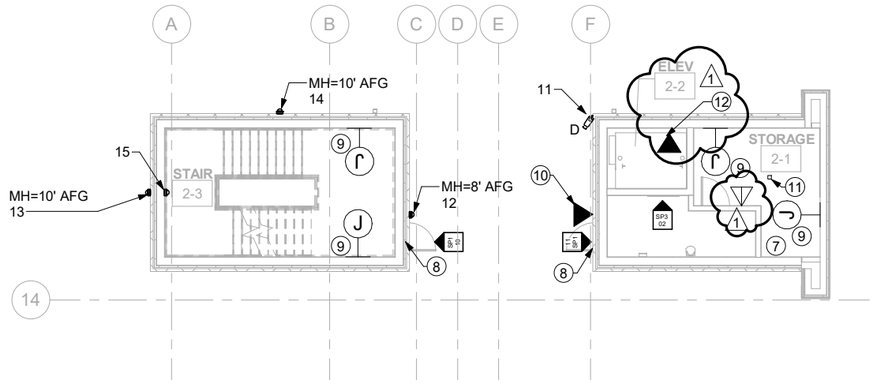

SECONDARY BUILDING FIRST FLOOR - ITS

1 / I104

0 1/16' 8' = 1'-0" 16' 32'

SCALE: 1/16" = 1'-0"

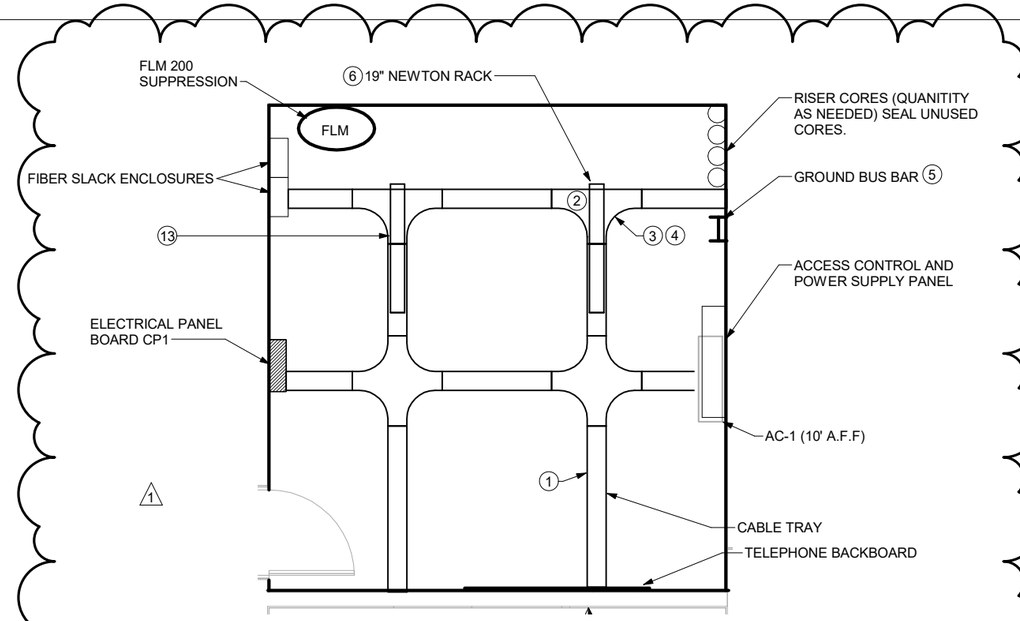

COMMUNICATION ROOM

3 / I104

3/16" = 1'-0"

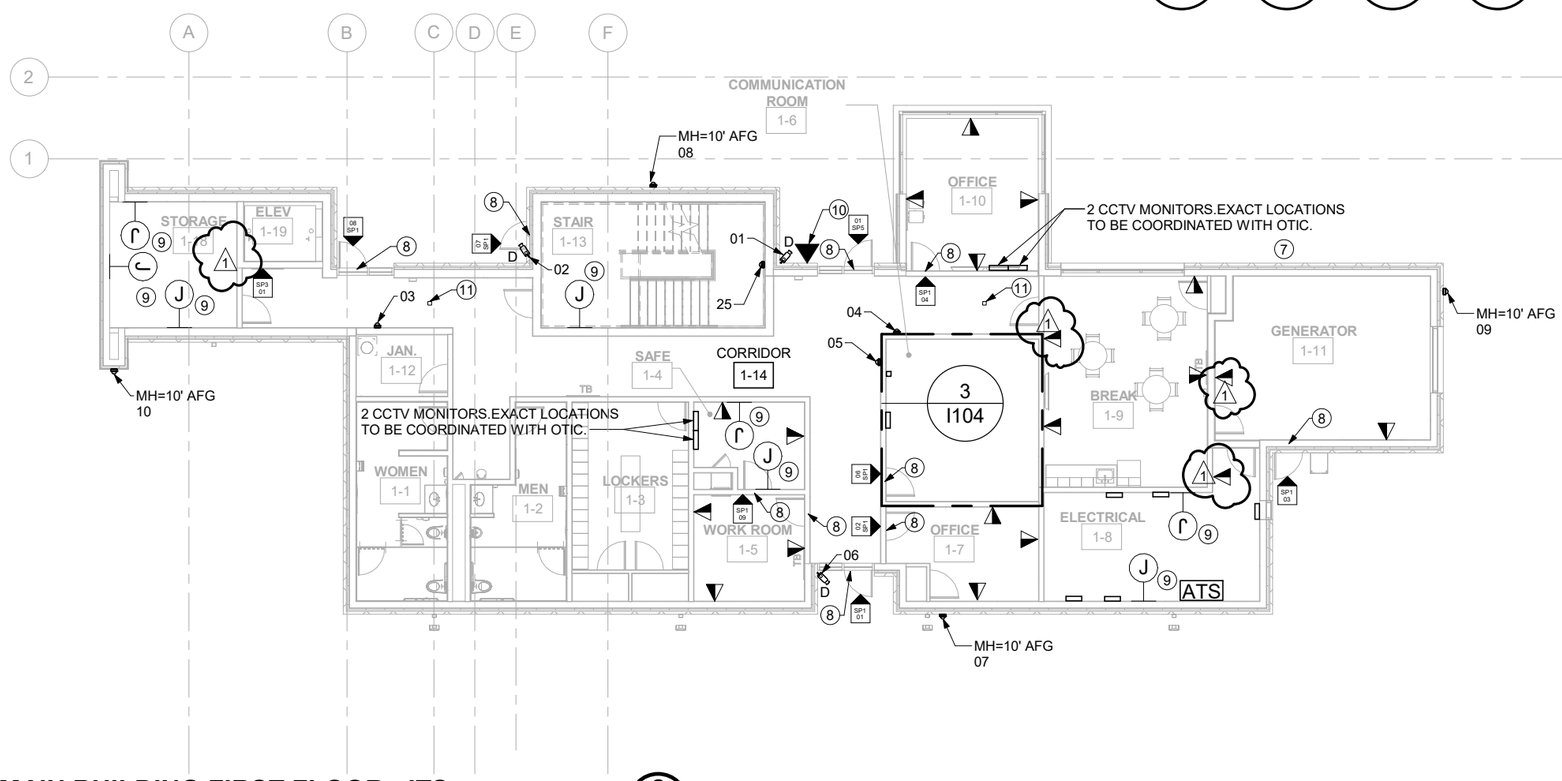

MAIN BUILDING FIRST FLOOR - ITS

2 / I104

1/16" = 1'-0"

0 8' 16' 32'

SCALE: 1/16" = 1'-0"

GENERAL NOTES:

1. CAMERAS/COM RM. EQUIPMENT BY OTHERS. PULL CAT6 WIRE/TERMINATE TO ALL LOCATIONS ALL ABOVE CEILING TILE CAMERAS-REMAIN ABOVE CEILING WITH 15' OF ADDITIONAL CAT6 WIRE. ALL WALL MOUNTS AND POLE MOUNTS SHALL HAVE 6' ADDITIONAL CAT6 WIRE.

KEY NOTES:

1 CABLE TRAY TO BE CEILING MOUNTED IN COMMUNICATIONS ROOM. PROVIDE WATERFALL SECTIONS TO TRANSITION CABLES TO CABINETS.

2 PROVIDE VERTICAL AND HORIZONTAL CABLE MANAGEMENT TO NEATLY DRESS IN ALL CABLES.

3 BOND CABLE TRAY TO GROUND BUSBAR WITH GREEN #6 AWG COPPER GROUND WIRE.

4 BOND EACH SECTION OF THE CABLE TRAY TOGETHER WITH #6 AWG COPPER GROUND WIRE.

5 COPPER GROUND BUSBAR, 1/4" X 4" X 12" WITH INSULATED WALL MOUNTED STANDOFFS.

6 NEWTON METAL PAINTED GRAY 19" RACKS.

7 SM 12 PAIR FIBER AND 50 PAIR CAT3 TO BE CONNECTED FROM COMM ROOM TO COMM.

8 PROVIDE S2 ACCESS CONTROL DOOR BUNDLE.

9 PROVIDE SINGLE GANG BOX AND 1-INCH CONDUIT STUB INTO DROP CEILING.

10 CEECO DOOR PHONE (6 PAIRS.)

11 PROVIDE SINGLE CABLE ACCESS POINT.

12 SINGLE CAT6 DROP FOR CONNECTION TO ELEVATOR. ELEVATOR CONTROLLER SHALL DIAL OUT TO CONTROL CENTER IN BEREA.

13 TWO 19" RACKS PROVIDED BY THE INTEGRATOR AND INSTALLED BY THE 58-20-01 CONTRACTOR.

N

DESIGN AGENCY
PRIME AE
540 White Pond Drive, Ste. E
Akron, Ohio 44320
(330)-864-7755

NO.	REVISIONS	BY	DATE
1	ADDENDUM No.2	CK	5/12/20

CHECKED CEK
IN CHARGE CEK
DESIGNED RNS
DRAWN RNS

ITS UTILITY BUILDING FIRST FLOOR PLAN
LUCAS COUNTY
TOLL PLAZA 49

PROJECT 58-20-01
DATE: 04/22/2020

I104

185 / 202

OHIO TURNPIKE AND INFRASTRUCTURE COMMISSION

5/12/2020 12:50:38 PM

Project Name

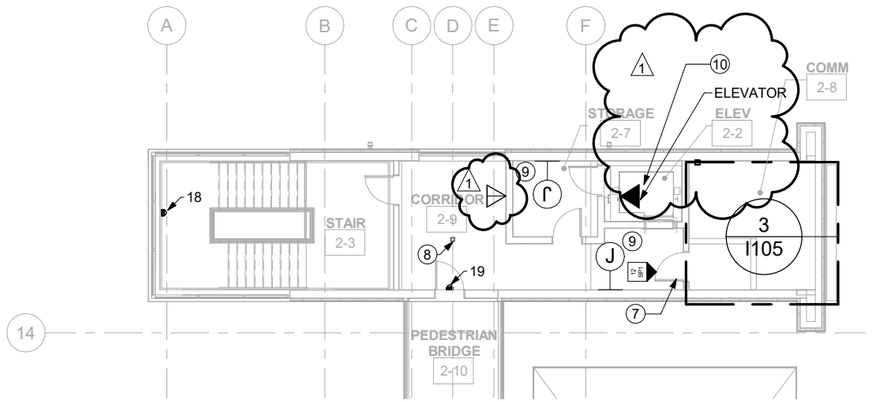

SECONDARY BUILDING - SECOND FLOOR - ITS

1 / I105

1/16" = 1'-0"

0 8' 16' 32'

SCALE: 1/16" = 1'-0"

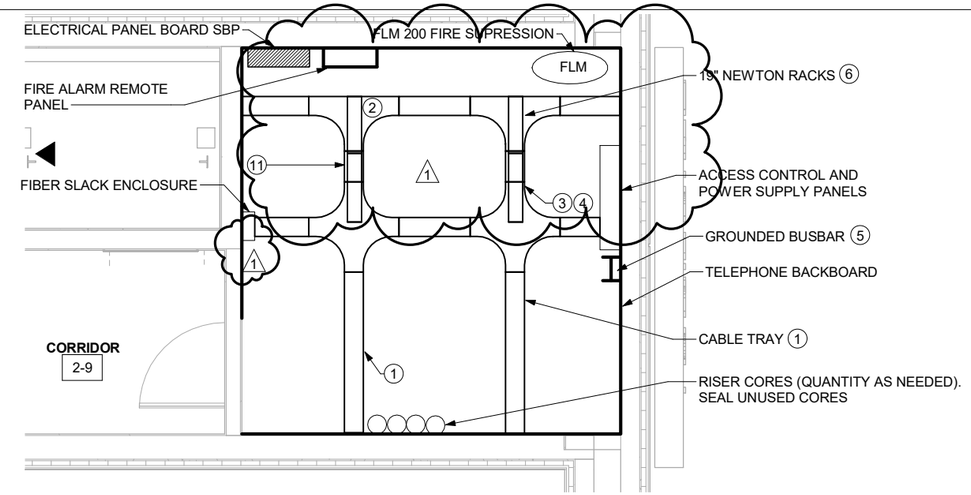

SECONDARY UTILITY BUILDING COMM. ROOM

3 / I105

3/16" = 1'-0"

GENERAL NOTES:

1. CAMERAS/COM RM. EQUIPMENT BY OTHERS. PULL CAT6 WIRE/TERMINATE TO ALL LOCATIONS ALL ABOVE CEILING TILE CAMERAS-REMAIN ABOVE CEILING WITH 15' OF ADDITIONAL CAT6 WIRE. ALL WALL MOUNTS AND POLE MOUNTS SHALL HAVE 6' ADDITIONAL CAT6 WIRE.

KEY NOTES:

1 CABLE TRAY TO BE CEILING MOUNTED IN COMMUNICATIONS ROOM. PROVIDE WATERFALL SECTIONS TO TRANSITION CABLES TO CABINETS.

2 PROVIDE VERTICAL AND HORIZONTAL CABLE MANAGEMENT TO NEATLY DRESS IN ALL CABLES.

3 BOND CABLE TRAY TO GROUND BUSBAR WITH GREEN #6 AWG COPPER GROUND WIRE.

4 BOND EACH SECTION OF THE CABLE TRAY TOGETHER WITH #6 AWG COPPER GROUND WIRE.

5 COPPER GROUND BUSBAR 1/4" X 4" X 12" WITH INSULATED WALL MOUNTED STANDOFFS.

6 NEWTON METAL PAINTED GRAY 19" RACKS.

7 PROVIDE S2 ACCESS CONTROL DOOR BUNDLE.

8 PROVIDE SINGLE CABLE ACCESS POINT.

9 PROVIDE SINGLE GANG BOX AND 1-INCH CONDUIT STUB INTO DROP CEILING.

10 SINGLE DROP CAT6A FOR CONNECTION TO ELEVATOR. ELEVATOR CONTROL SHALL DIAL OUT TO CONTROL CENTER AT BEREA.

11 TWO 19" RACKS PROVIDED BY THE INTEGRATOR AND INSTALLED BY THE 58-20-01 CONTRACTOR.

12 PROVIDE (4) CAT6 CABLE TO EACH BOOTH FROM COMMUNICATIONS ROOM.

1

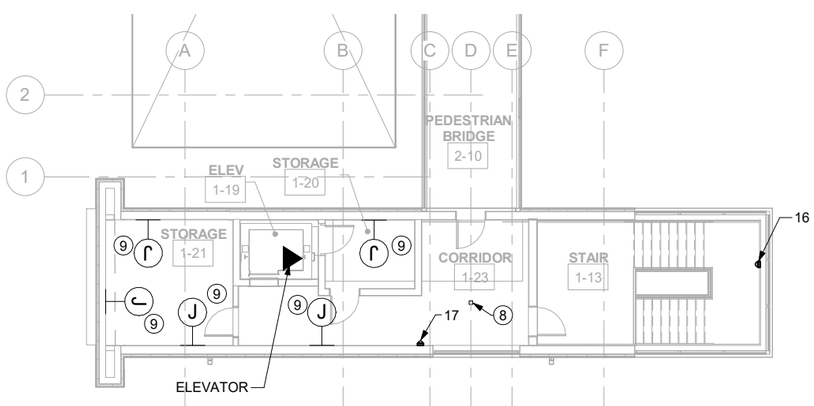

MAIN BUILDING - SECOND FLOOR - ITS

2 / I105

1/16" = 1'-0"

0 8' 16' 32'

SCALE: 1/16" = 1'-0"

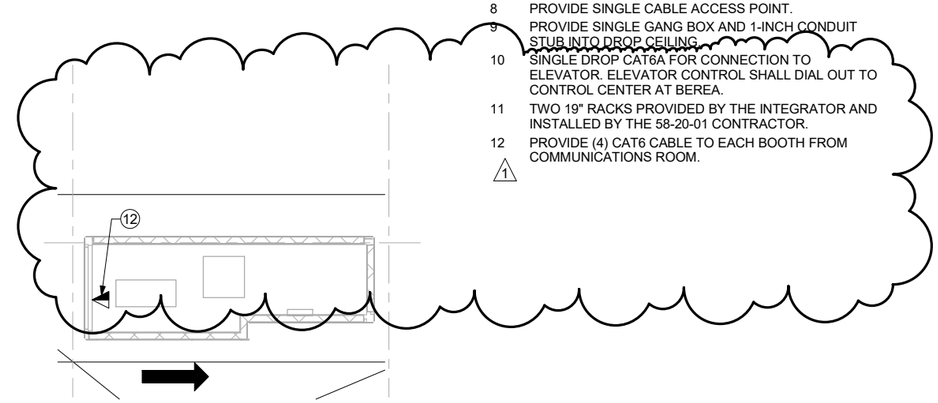

TYPICAL TOLL BOOTH FLOOR PLAN

4 / I105

1/8" = 1'-0"

0 4' 8' 16'

SCALE: 1/8" = 1'-0"

N

5/12/2020 12:50:58 PM

Project Name

DESIGN AGENCY
PRIME AE
540 White Pond Drive, Ste. E
Akron, Ohio 44320
(330)-864-7755

NO.	REVISIONS	BY	DATE
1	ADDENDUM No.2	CK	5/12/20

DESIGNED RNS | DRAWN RNS | CHECKED CEK | IN CHARGE CEK

ITS UTILITY BUILDING SECOND FLOOR PLAN

TOLL PLAZA 49 — LUCAS COUNTY

PROJECT 58-20-01
DATE: 04/22/2020

I105

186 / 202

OHIO TURNPIKE AND INFRASTRUCTURE COMMISSION

GENERAL NOTES

A. TERMINATIONS AT INDIVIDUAL DEVICES AND BOXES SHALL BE PERFORMED BY INTEGRATOR. CONNECTIONS SHOWN ON THIS DIAGRAM ARE DIAGRAMMATIC ONLY AND ARE NOT INTENDED TO IMPLY CONNECTIONS OR TERMINATIONS BY THE ELECTRICAL CONTRACTOR.

1

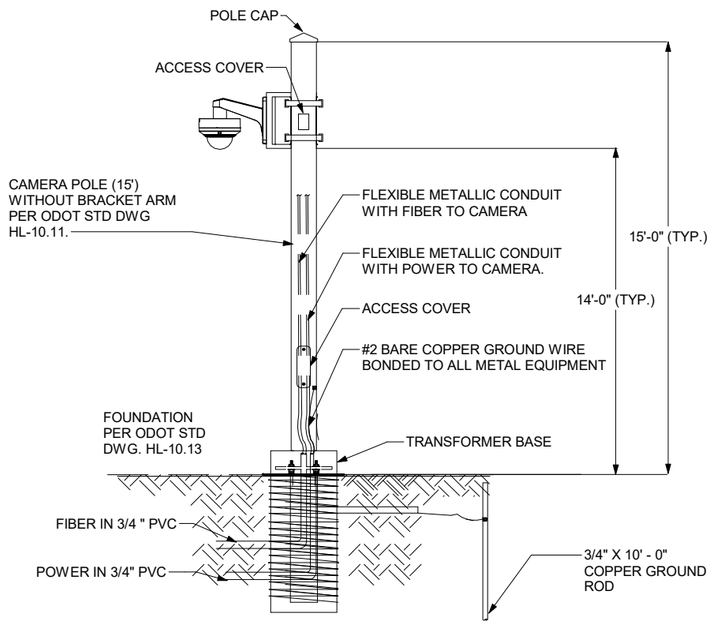

CAMERA POLE 1 DETAIL

SCALE: N.T.S.

1 / I106

5/12/2020 12:51:26 PM

Project Name

DESIGN AGENCY
PRIME AE
540 White Pond Drive, Ste. E
Akron, Ohio 44320
(330)-864-7755

NO.	REVISIONS	BY	DATE
1	ADDENDUM No.2	CK	5/12/20

DESIGNED RNS
CHECKED CEK
DRAWN RNS
IN CHARGE CEK

ITS GATES CONNECTIVITY DETAILS
TOLL PLAZA 49
LUCAS COUNTY

PROJECT 58-20-01
DATE: 04/22/2020

I106

187 / 202

OHIO TURNPIKE AND INFRASTRUCTURE COMMISSION

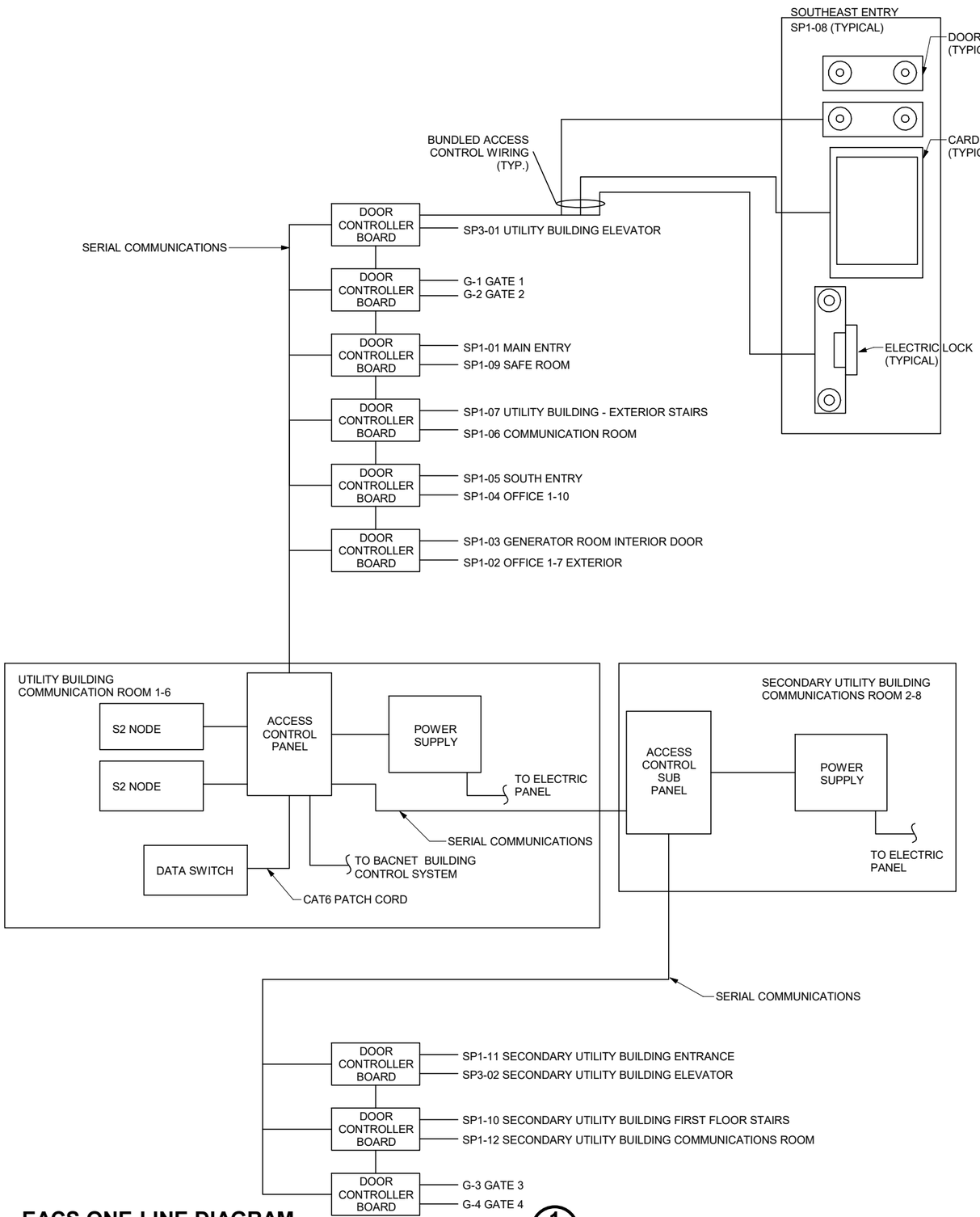

EACS ONE-LINE DIAGRAM

SCALE: N.T.S.

1 / I107

GENERAL NOTES:

1. CAMERAS/COM RM. EQUIPMENT BY OTHERS. PULL CAT6 WIRE/TERMINATE/TEST TO ALL LOCATIONS ALL ABOVE CEILING TILE CAMERAS-REMAIN ABOVE CEILING WITH 15' OF ADDITIONAL CAT6 WIRE. ALL WALL MOUNTS AND POLE MOUNTS SHALL HAVE 6' ADDITIONAL CAT6 WIRE.

1

DOOR NUMBER	DOOR NUMBER	ELECTRONIC MORTISE INTERGRATED REX	MAGENTIC DOOR CONTACT	LATCH GUARD	DOOR CLOSER	TACTILE WARNING	ASSOCIATED CAMERAS	SHEET NO.	KEY SCHEDULE
SP1-01	MAIN ENTRY	X	X	X	X	-	1	I104	1
SP1-02	OFFICE 1-7	X	X	-	X	-	-	I104	1
SP1-03	GENERATOR RM EXTERIOR DOOR	X	X	X	X	X	-	I104	1
SP1-04	OFFICE 1-10	X	X	-	X	-	-	I104	1
SP1-05	SOUTH ENTRY	X	X	X	X	-	6	I104	1
SP1-06	COMMUNICATION ROOM	X	X	-	X	-	-	I104	2
SP1-07	UTILITY BLDG EXTERIOR STAIRS	X	X	X	X	-	2	I104	1
SP1-08	UTILITY BLDG SOUTHEAST ENTRY	X	X	X	X	-	7	I104	1
SP1-09	SAFE ROOM	X	X	X	X	-	-	I104	1
SP1-10	SECONDARY UTILITY BLDG STAIRS	X	X	X	X	-	10	I105	1
SP1-11	SECONDARY UTILITY BLDG ENTANCE	X	X	X	X	-	9	I105	1
SP1-12	SECONDARY UTILITY BLDG COMM. ROOM	X	X	-	X	-	-	I105	2
SP3-01	UTILITY BUILDING ELEVATOR	-	-	-	-	-	-	I104	3
SP3-02	SECONDARY UTILITY BLDG ELEVATOR	-	-	-	-	-	-	I105	3
G-1	GATE 1	-	-	-	-	-	12	I102	4
G-2	GATE 2	-	-	-	-	-	13	I102	4
G-3	GATE 3	-	-	-	-	-	14	I103	4
G-4	GATE 4	-	-	-	-	-	15	I103	4

EACS SCHEDULE

SCALE: N.T.S.

2 / I107

DESIGN AGENCY
PRIME AE
540 White Pond Drive, Ste. E
Akron, Ohio 44320
(330)-864-7755

NO.	REVISIONS	BY	DATE
1	ADDENDUM No.2	CK	5/12/20

DESIGNED RNS | DRAWN RNS | CHECKED CEK | IN CHARGE CEK

EACS ONE-LINE DIAGRAM AND SCHEDULE

TOLL PLAZA 49 — LUCAS COUNTY

PROJECT 58-20-01
DATE: 04/22/2020

I107

188 / 202

OHIO TURNPIKE AND INFRASTRUCTURE COMMISSION

Project Name 5/12/2020 12:51:54 PM

GENERAL NOTES:

1. CAMERAS/COM RM. EQUIPMENT. PULL CAT6 WIRE/TERMINATE/TEST TO ALL LOCATIONS ALL ABOVE CEILING TILE CAMERAS-REMAIN ABOVE CEILING WITH 15' OF ADDITIONAL CAT6 WIRE. ALL WALL MOUNTS AND POLE MOUNTS SHALL HAVE 6' ADDITIONAL CAT6 WIRE.

KEYNOTES:

1) CONNECT CAMERA TO PATCH PANEL VIA SURGE SUPPRESSOR. CONNECT SURGE SUPPRESSOR TO PATCH PANEL WITH CAT 6 PATCH CABLES. CONNECT SURGE SUPPRESSOR TO GROUND.

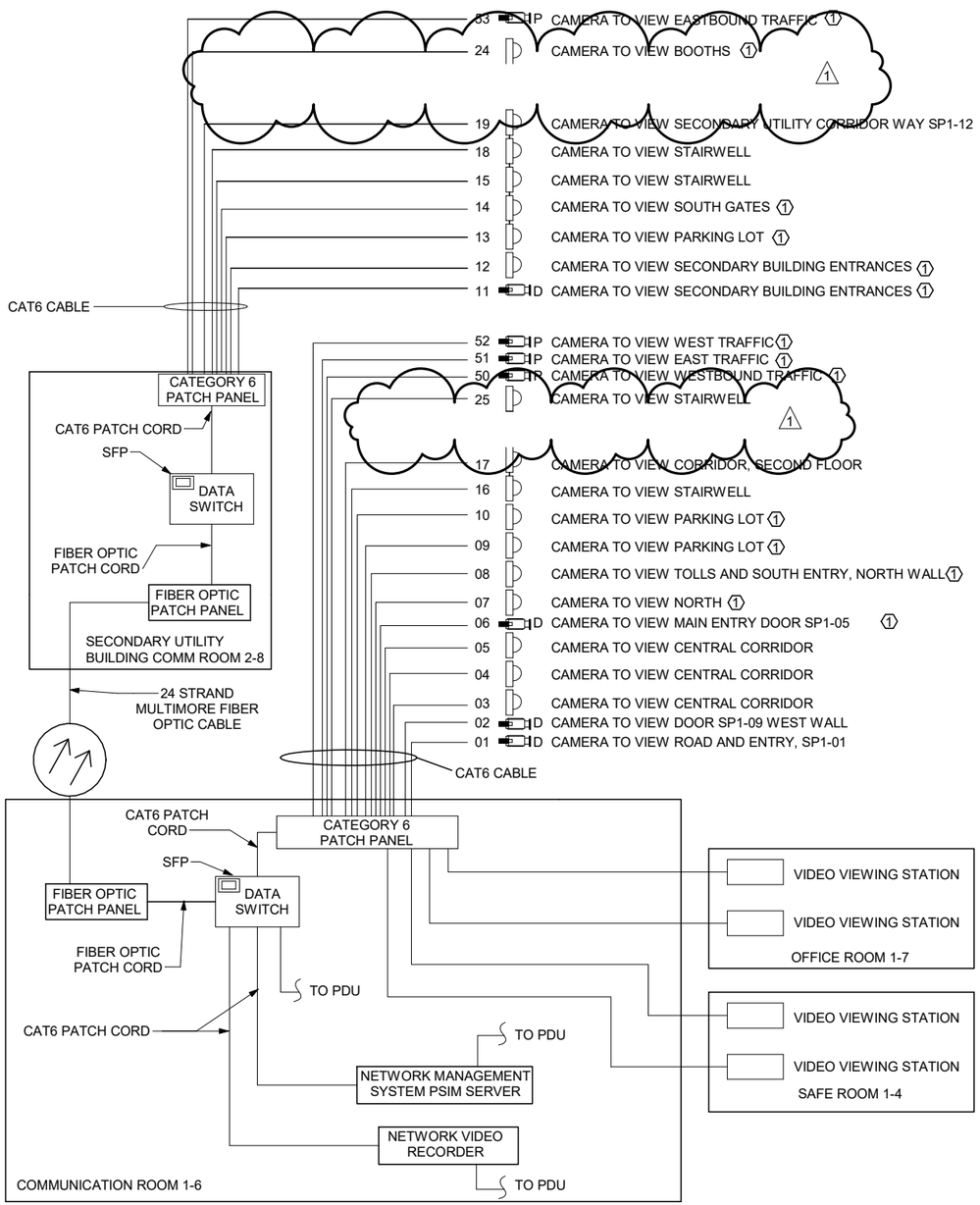

CCTV ONE LINE DIAGRAM

SCALE: N.T.S.

1 / I108

CAMERA #	CAMERA TYPE	MOUNT TYPE	SHEET NO,
01	DOME	WALL	I104
02	DOME	WALL	I104
03	180	WALL	I104
04	180	WALL	I104
05	180	WALL	I104
06	DOME	WALL	I104
07	180	WALL	I104
08	180	WALL	I104
09	180	WALL	I104
10	180	WALL	I104
11	DOME	WALL	I104
12	180	WALL	I104
13	180	WALL	I104
14	180	WALL	I104
15	180	WALL	I104
16	180	WALL	I105
17	180	WALL	I105
18	180	WALL	I105
19	180	WALL	I105
	OMITTED		
	OMITTED		
	OMITTED		
	OMITTED		
24	180	WALL	I103
25	180	WALL	I104
50	PTZ	POLE	I102
51	PTZ	POLE	I102
52	PTZ	POLE	I102
53	PTZ	POLE	I103

CCTV SCHEDULE

SCALE: N.T.S.

2 / I108

DESIGN AGENCY
PRIME AE
540 White Pond Drive, Ste. E
Akron, Ohio 44320
(330)-864-7755

NO.	REVISIONS	BY	DATE
1	ADDENDUM No.2	CK	5/12/20

DESIGNED RNS | DRAWN RNS | CHECKED CEK | IN CHARGE CEK

CCTV ONE-LINE DIAGRAM AND SCHEDULE

LUCAS COUNTY

TOLL PLAZA 49

PROJECT 58-20-01

DATE: 04/22/2020

I108

189 / 202

OHIO TURNPIKE AND INFRASTRUCTURE COMMISSION

5/12/2020 12:53:55 PM

Project Name

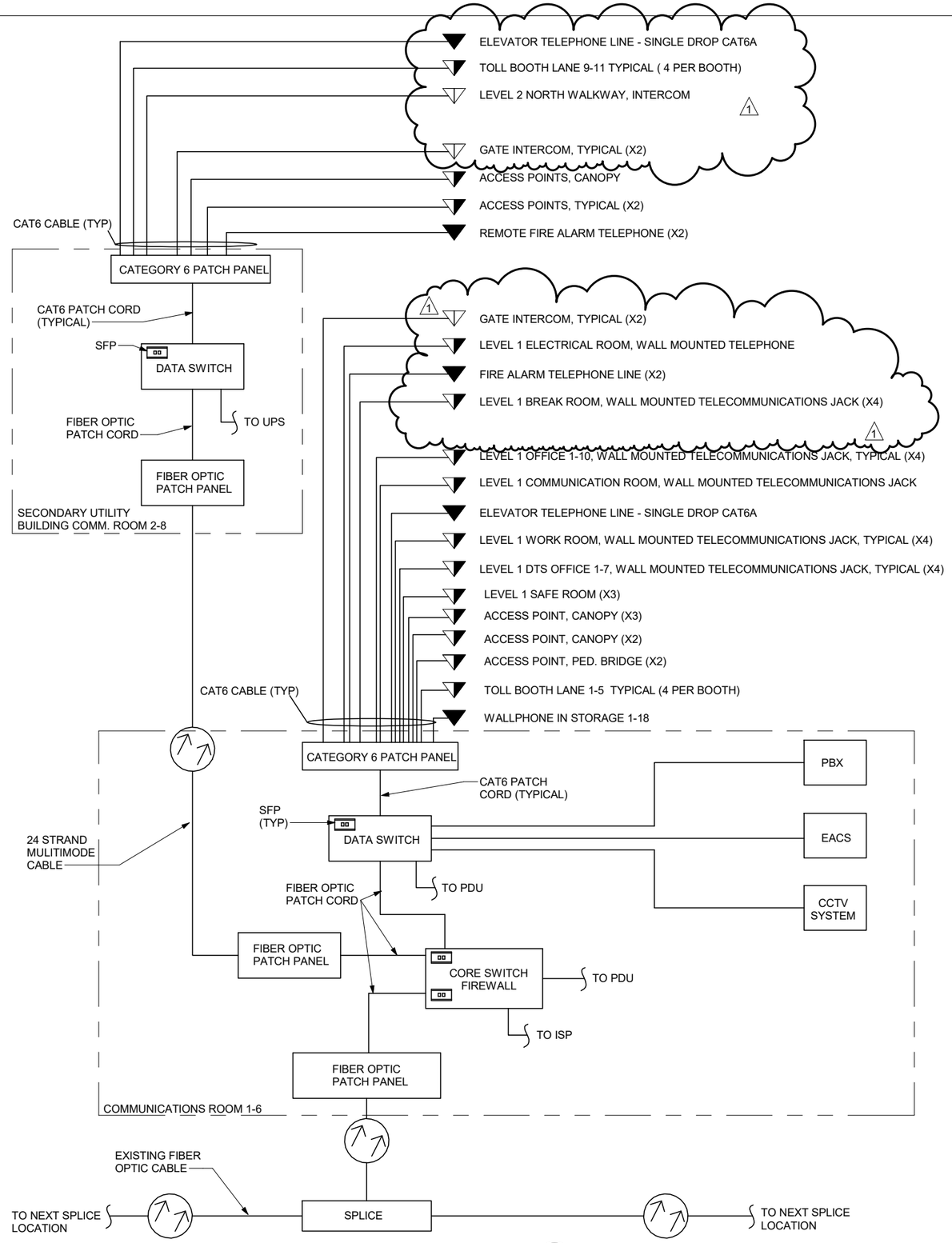

TELECOMMUNICATIONS ONE LINE DIAGRAM

1 / I109

SCALE: N.T.S.

GENERAL NOTES:

1. CAMERAS/COM RM. EQUIPMENT. PULL CAT6 WIRE/TERMINATE/TEST TO ALL LOCATIONS ALL ABOVE CEILING TILE CAMERAS-REMAIN ABOVE CEILING WITH 15' OF ADDITIONAL CAT6 WIRE. ALL WALL MOUNTS AND POLE MOUNTS SHALL HAVE 6' ADDITIONAL CAT6 WIRE.

1

TELEPHONE SCHEDULE	
ROOM	TELEPHONE TYPE
WORK ROOM 1-5	WALL MOUNT
SAFE ROOM 1-4	WALL MOUNT
OFFICE 1-7	DESK MOUNT
OFFICE 1-10	DESK MOUNT
BREAK RM 1-9	WALL MOUNT
GENERATOR RM 1-11	WALL MOUNT
ELECTRICAL RM 1-8	WALL MOUNT
SECONDARY UTILITY BUILDING RM 2-8	NONE
SECOND FLOOR NORTH WALKWAY	INTERCOM
GATE 1	INTERCOM
GATE 2	INTERCOM
GATE 3	INTERCOM
GATE 4	INTERCOM
STORAGE RM 1-18	WALL MOUNT
ELEV RM 2-2	WALL MOUNT
ELEV RM 2-19	WALL MOUNT

TELEPHONE SCHEDULE

2 / I109

SCALE: N.T.S.

DESIGN AGENCY
PRIME AE
540 White Pond Drive, Ste. E
Akron, Ohio 44320
(330)-864-7755

NO.	REVISIONS	BY	DATE
1	ADDENDUM No.2	CK	5/12/20

DESIGNED RNS
DRAWN RNS
CHECKED CEK
IN CHARGE CEK

TELECOM ONE-LINE DIAGRAM AND SCHEDULE
TOLL PLAZA 49
LUCAS COUNTY

PROJECT 58-20-01
DATE: 04/22/2020

I109

190 / 202

OHIO TURNPIKE AND INFRASTRUCTURE COMMISSION

Project Name

5/12/2020 1:00:01 PM

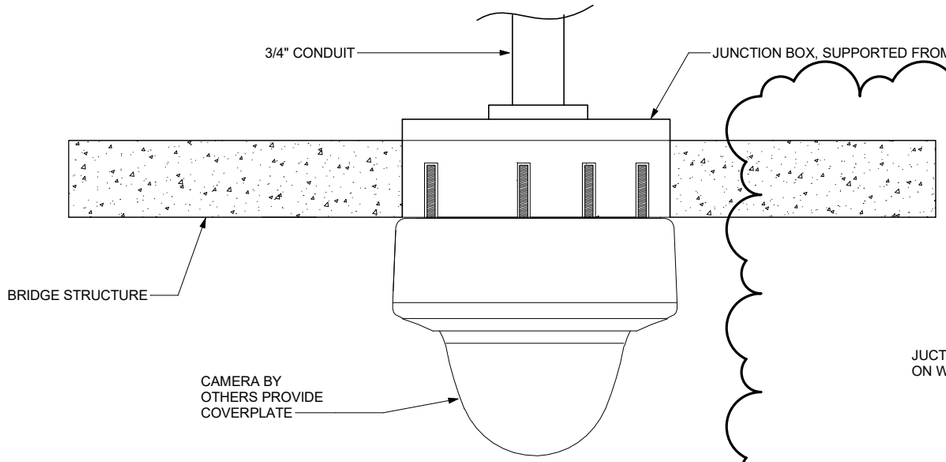

CEILING MOUNTED CCTV CAMERA MOUNTING DETAIL

1 / I111

SCALE: N.T.S.

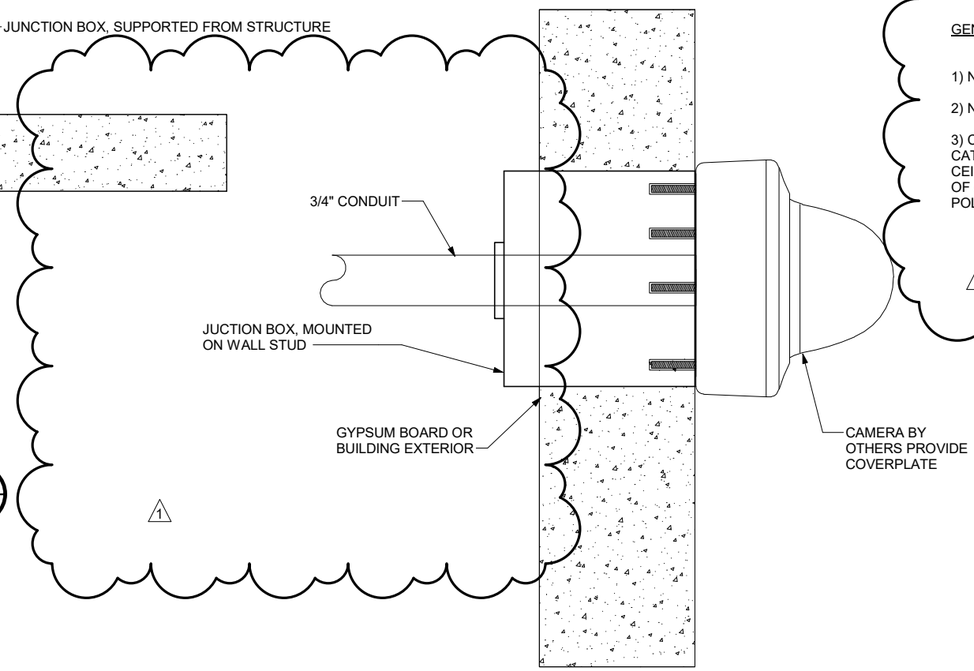

WALL MOUNTED CCTV CAMERA DETAIL

2 / I111

SCALE: N.T.S.

GENERAL NOTES:

1) NOT USED.

2) NOT USED.

3) CAMERAS/COM RM. EQUIPMENT BY OTHERS. PULL CAT6 WIRE/TERMINATE TO ALL LOCATIONS ALL ABOVE CEILING TILE CAMERAS-REMAIN ABOVE CEILING WITH 15' OF ADDITIONAL CAT6 WIRE. ALL WALL MOUNTS AND POLE MOUNTS SHALL HAVE 6' ADDITIONAL CAT6 WIRE.

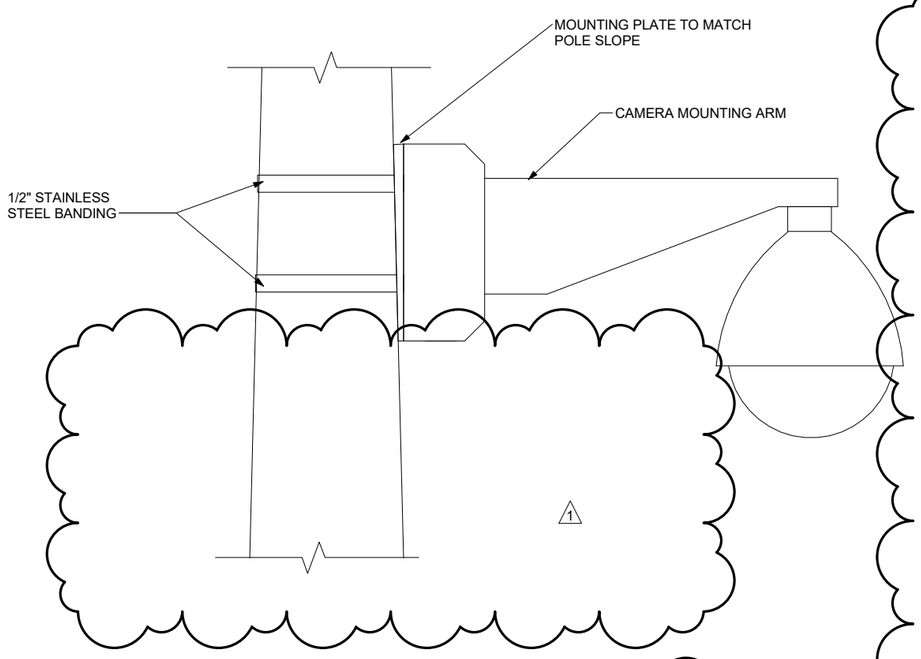

POLE MOUNTED CCTV CAMERA DETAIL

3 / I111

SCALE: N.T.S. (PROVIDE BY INTEGRATOR)

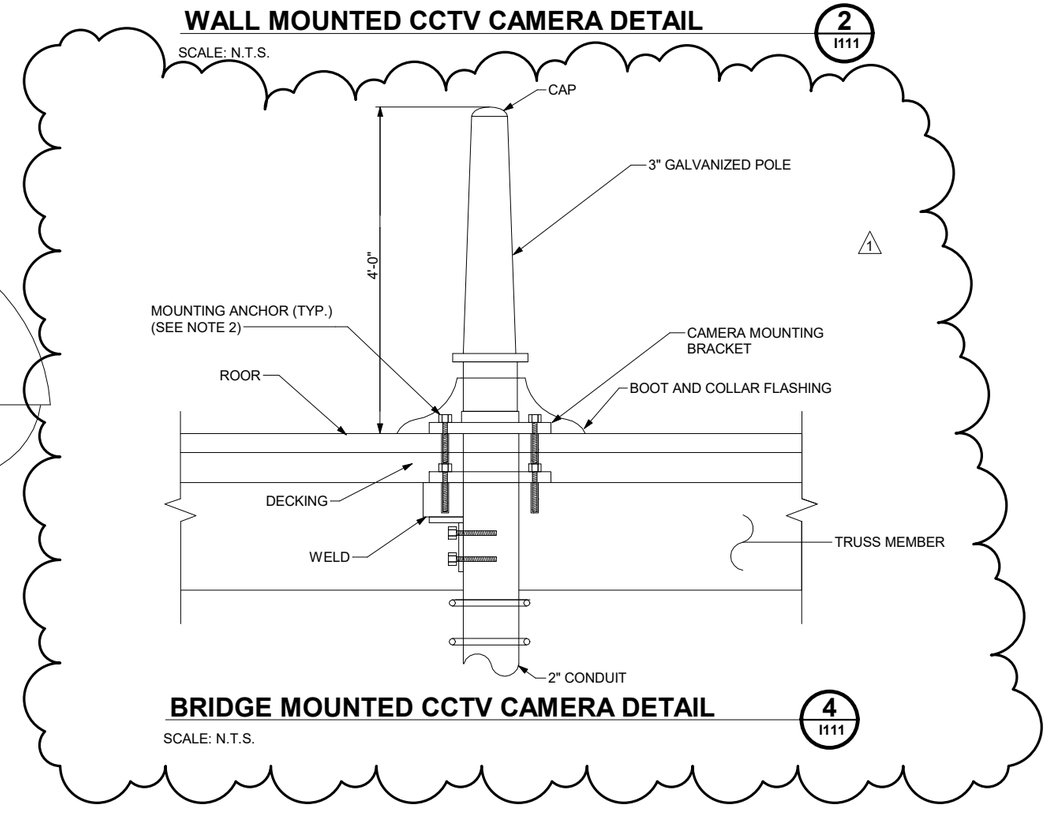

BRIDGE MOUNTED CCTV CAMERA DETAIL

4 / I111

SCALE: N.T.S.

DESIGN AGENCY
PRIME AE
540 White Pond Drive, Ste. E
Akron, Ohio 44320
(330)-864-7755

NO.	REVISIONS	BY	DATE
1	ADDENDUM No.2	CK	5/12/20

DESIGNED RNS
CHECKED CEK
DRAWN RNS
IN CHARGE CEK

OHIO TURNPIKE

OHIO TURNPIKE AND INFRASTRUCTURE COMMISSION

CCTV CAMERA DETAILS

LUCAS COUNTY

TOLL PLAZA 49

PROJECT 58-20-01
DATE: 04/22/2020

I111

192 / 202

5/12/2020 1:00:37 PM

Project Name

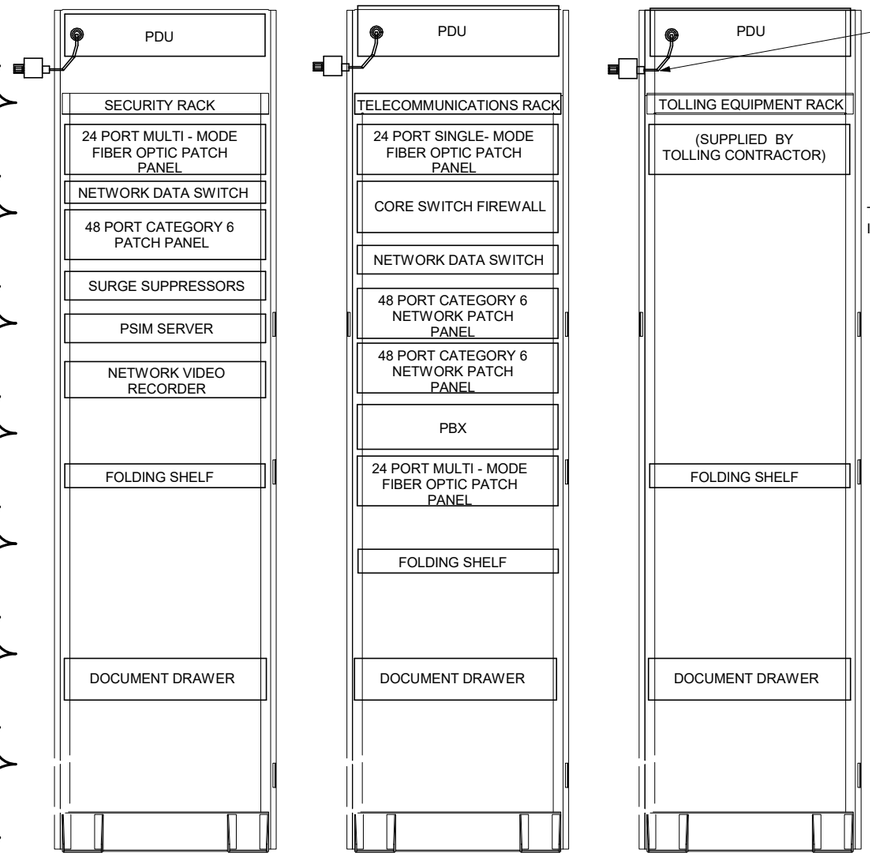

TO TWIST LOCK RECEPTACLE IN COMM. ROOM (TYP.)

TO TWIST LOCK RECEPTACLE IN COMM. ROOM

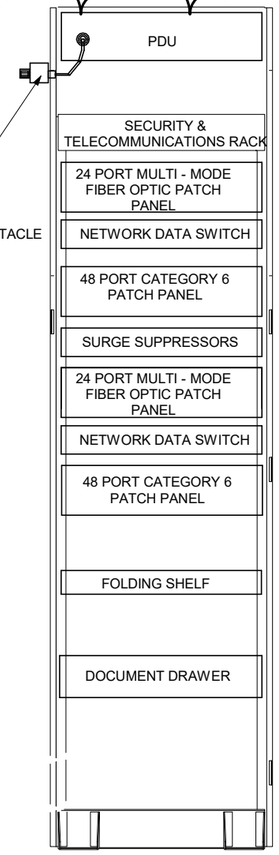

1

UTILITY BUILDING COMM. ROOM RACK ELEVATION

SCALE: N.T.S.

1 / I112

SECONDARY UTILITY BUILDING COMM. ROOM RACK ELEVATION

SCALE: N.T.S.

2 / I112

GENERAL NOTES: 1

1. PROVIDE 19" NEWTON RACK.
2. SECURE RACKS TO COMMUNICATIONS ROOM FLOOR PER MANUFACTURER'S RECOMMENDATION.
3. NO DOORS, POWER DISTRIBUTIONS UNITS AND CABLE MANAGEMENT NOT SHOWN FOR CLARITY.
4. PROVIDE TWO POWER DISTRIBUTION UNITS PER CABINET, EACH WITH DEDICATED 20 AMP CIRCUIT FROM THE UPS.
5. POWER EACH UPS FROM DEDICATED 20 AMP CIRCUIT IN THE COMMUNICATION ROOM ELECTRICAL PANEL.
6. CONNECT ALL EQUIPMENT TO GROUND BAR IN COMMUNICATIONS ROOM.
7. EQUIPMENT PLACEMENT IS SYMBOLIC. FIELD VERIFY AND SUBMIT LOCATIONS TO THE ENGINEER FOR APPROVAL.
8. CAMERAS/COM RM. EQUIPMENT BY OTHERS. PULL CAT6 WIRE/TERMINATE TO ALL LOCATIONS ALL ABOVE CEILING TILE CAMERAS-REMAIN ABOVE CEILING WITH 15' OF ADDITIONAL CAT6 WIRE. ALL WALL MOUNTS AND POLE MOUNTS SHALL HAVE 6' ADDITIONAL CAT6 WIRE.

DESIGN AGENCY
PRIME AE
540 White Pond Drive, Ste. E
Akron, Ohio 44320
(330)-864-7755

NO.	REVISIONS	BY	DATE
1	ADDENDUM No.2	CK	5/12/20

DESIGNED RNS
CHECKED CEK
DRAWN RNS
IN CHARGE CEK

ITS CABINET DETAILS

TOLL PLAZA 49

LUCAS COUNTY

PROJECT 58-20-01
DATE: 04/22/2020

I112

OHIO TURNPIKE AND INFRASTRUCTURE COMMISSION

5/12/2020 1:00:57 PM

Project Name

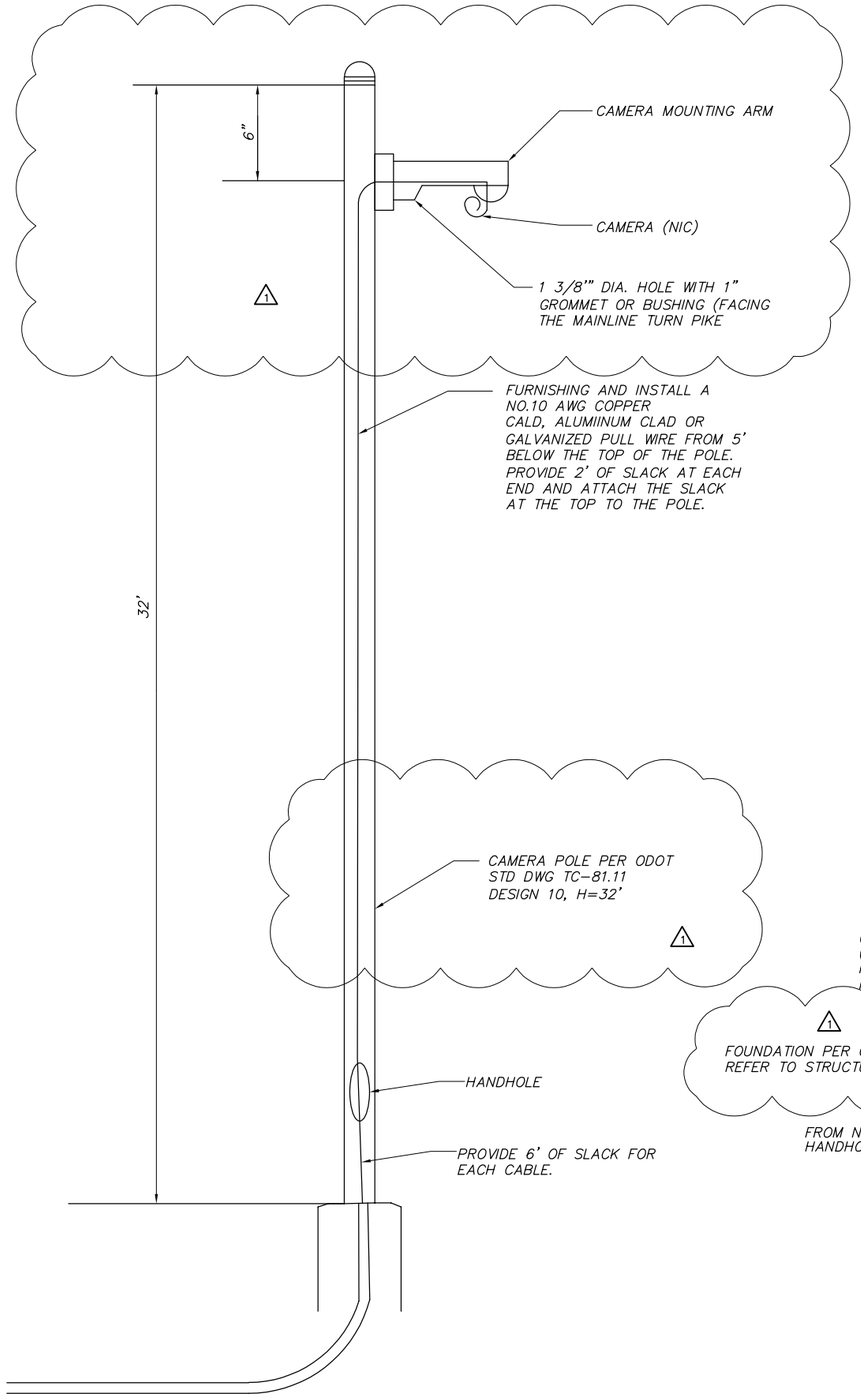

1/1113 CAMERA POLE
SCALE: N.T.S.

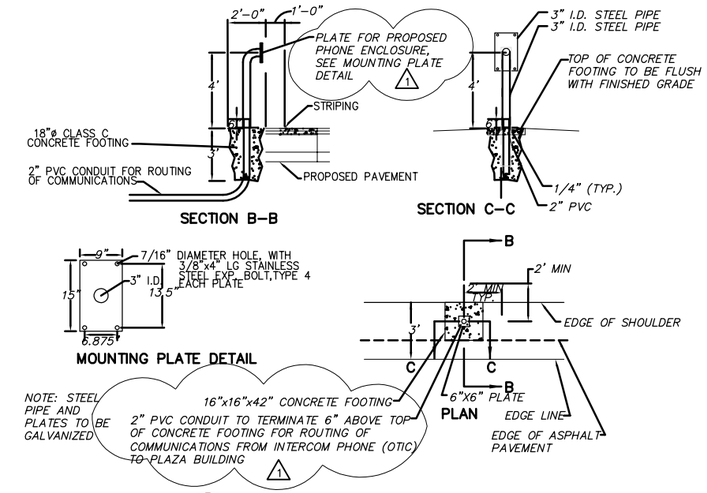

2/1113 PHONE + SUPPORT DETAIL
SCALE: N.T.S.

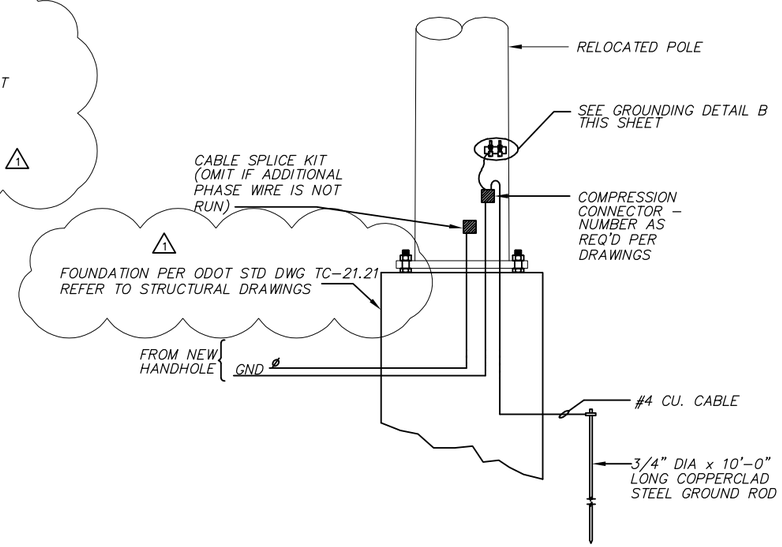

3/1113 TYPICAL POLE WIRING DIAGRAM
SCALE: N.T.S.

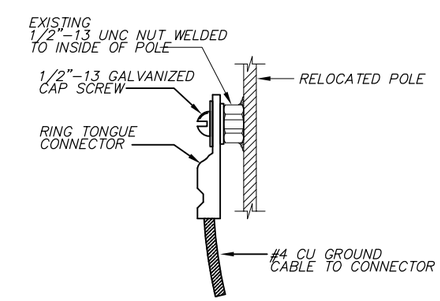

4/1113 POLE GROUNDING DETAIL
SCALE: N.T.S.

DESIGN AGENCY
PRIME AE
540 White Pond Drive, Ste. E
Akron, Ohio 44320
(330)-864-7755

NO.	REVISIONS	BY	DATE
1	ADDENDUM No. 2	CK	5/12/20

DESIGNED	CHECKED	DRAWN	IN CHARGE
RNS	CEK	RNS	CEK

CAMERA POLE & PHONE DETAILS
TOLL PLAZA 49
LUCAS COUNTY

PROJECT 58-20-01
DATE: 04/22/2020

I113

194/202

OHIO TURNPIKE AND INFRASTRUCTURE COMMISSION

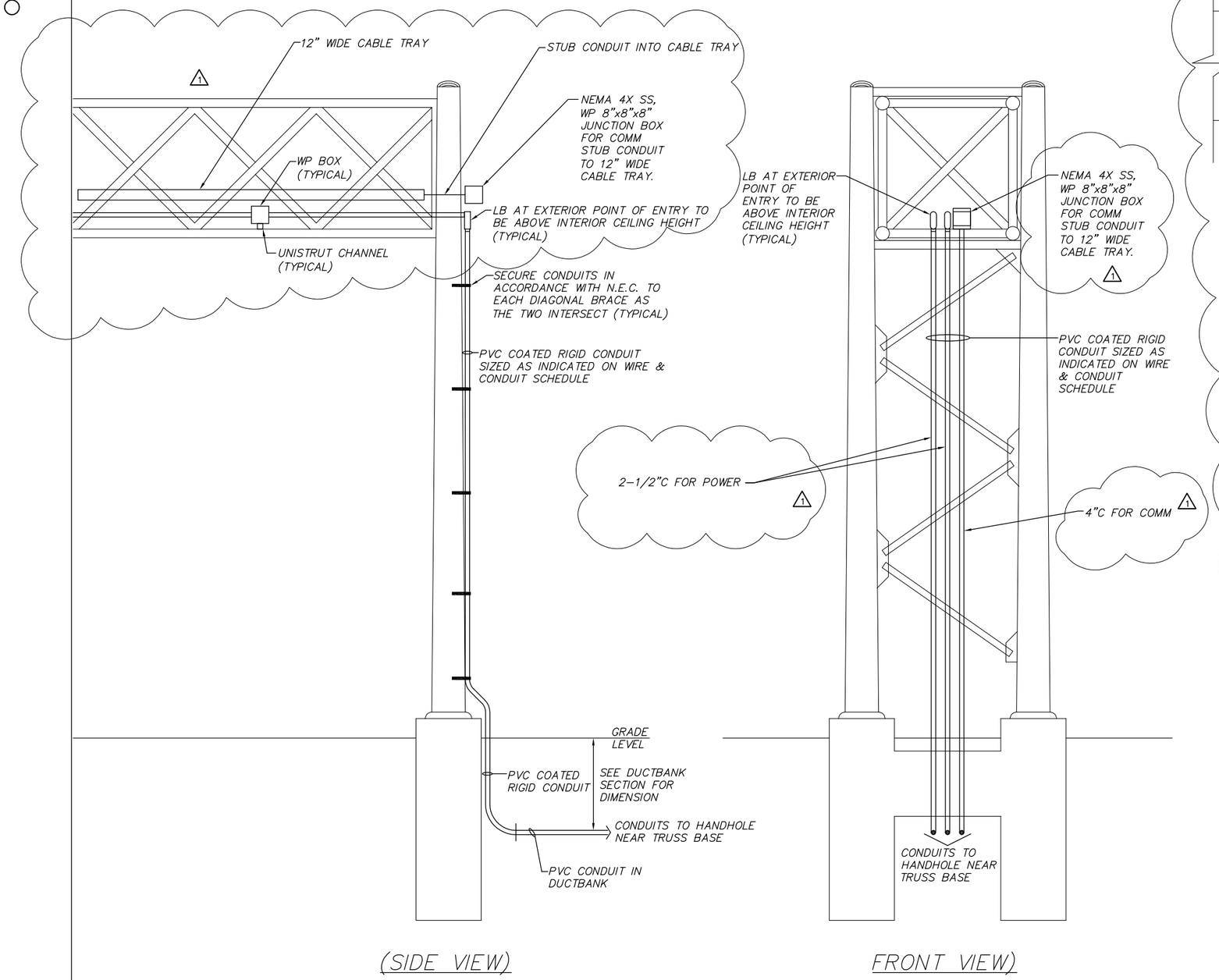

1 / I114 TRUSS ELEVATION DETAIL
SCALE: N.T.S.

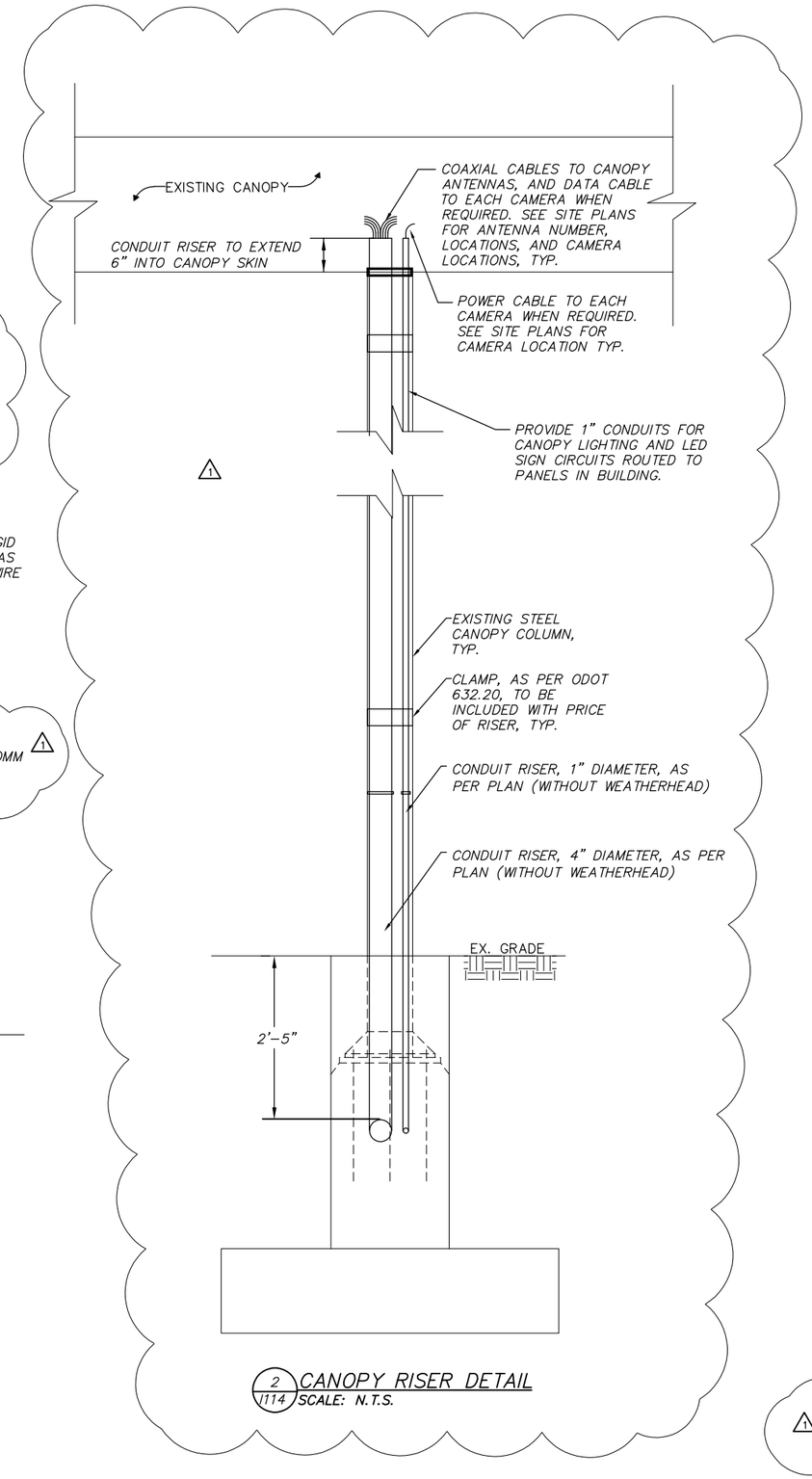

2 / I114 CANOPY RISER DETAIL
SCALE: N.T.S.

DESIGN AGENCY
PRIME AE
540 White Pond Drive, Ste. E
Akron, Ohio 44320
(330)-864-7755

NO.	REVISIONS	BY	DATE
1	ADDENDUM No. 2	CK	5/1/20
-	-	-	-

DESIGNED RNS
CHECKED CEK
DRAWN RNS
IN CHARGE CEK

TRUSS ELEVATION DETAIL
LUCAS COUNTY
TOLL PLAZA 49

PROJECT 58-20-01
DATE: 04/22/2020

OHIO TURNPIKE AND INFRASTRUCTURE COMMISSION

I114

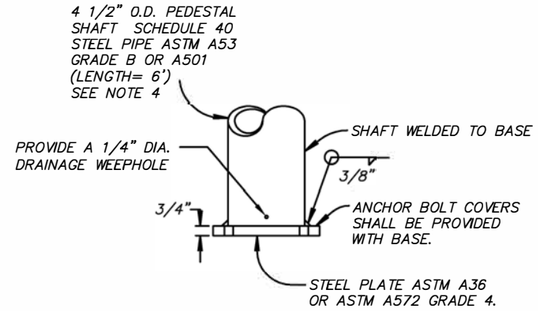

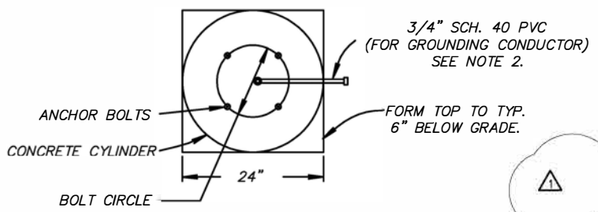

PLAN

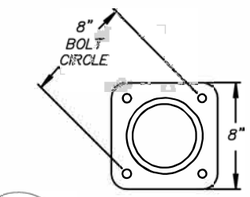

3 PLATE PEDESTAL BASE

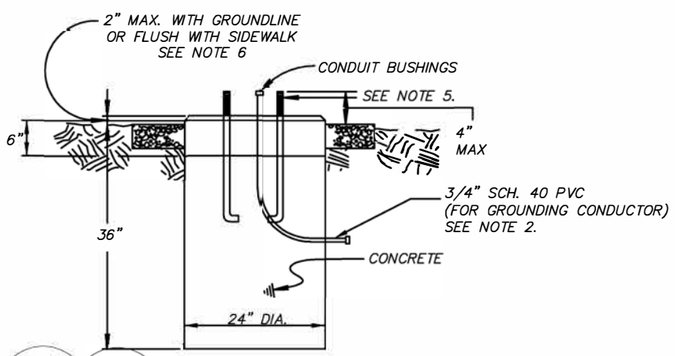

2 PEDESTAL FOUNDATION

FOUNDATION CONCRETE	WORK PAD
0.42 C.Y.	0.96 S.Y.

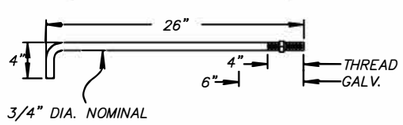

PEDESTAL ANCHOR BOLT

ASTM A307 STEEL

1 READER PEDESTAL DETAIL

NOTES

1. INCH PREFORMED JOINT FILLER AS PER 705.03 SHALL BE USED BETWEEN FOUNDATIONS AND ADJACENT PAVED AREAS.
2. A 3/4 INCH SCHEDULE 40 PVC SHALL BE INSTALLED IN EACH FOUNDATION.
3. ALL PEDESTALS SHALL BE PROVIDED WITH A METHOD OF SECURELY ATTACHING A 4 AWG INSULATED COPPER GROUNDING CONDUCTOR TO THE PEDESTAL OR ANCHOR BOLT. NO CABLES OR CONNECTIONS SHALL BE EXTERNAL TO THE PEDESTAL.
4. THE PEDESTAL SHAFT LENGTH AS SHOWN IN THE PLANS INCLUDES THE PEDESTAL BASE HEIGHT FOR EITHER BASE DESIGN.
5. THE PEDESTAL BASE SHALL SET ON THE FOUNDATION TOP WITHOUT GROUTING, PERFORMED FILLERS OR LEVELING NUTS UNDER THE BASE. STEEL SHIMS MAY BE USED UNDER THE BASE FOR LEVELING THE INSTALLATION.
6. THE FOUNDATION AREA OF CONTACT WITH THE PEDESTAL BASE SHALL BE LEVEL. IF ADJACENT PAVED AREAS SLOPE, THE REMAINDER OF THE FOUNDATION TOP SHALL BE BEVELED TO MEET THE ADJACENT ELEVATIONS.
7. ALL METAL MATERIALS SHALL BE HOT DIPPED GALVANIZED IN ACCORDANCE WITH ASTM-A123. THE HOT DIPPED GALVANIZED FINISH SHALL COMPLETELY COVER ALL SURFACES OF THE POLE SHAFT AND BASE PLATE.

1 / I115 READER PEDESTAL DETAIL & PLATE PEDESTAL BASE

SCALE: N.T.S.

DESIGN AGENCY
PRIME EV
540 White Pond Drive, Ste. E
Akron, Ohio 44320
(330)-864-7755

NO.	REVISIONS	BY	DATE
1	ADDENDUM No. 2	CK	5/1/20
-	-	-	-

DESIGNED RNS | CHECKED CEK
DRAWN RNS | IN CHARGE CEK

READER & PLATE PEDESTAL BASE DETAIL

TOLL PLAZA 49 — LUCAS COUNTY

PROJECT 58-20-01
DATE: 04/22/2020

I115

196 / 202

OHIO TURNPIKE AND INFRASTRUCTURE COMMISSION

NOTE: PROVIDED 6' OF SLACK FOR EACH CABLE ENTERING READER BOX. EACH CABLE SHALL BE LOOPED TIED AND STORED IN THE READER BOX.

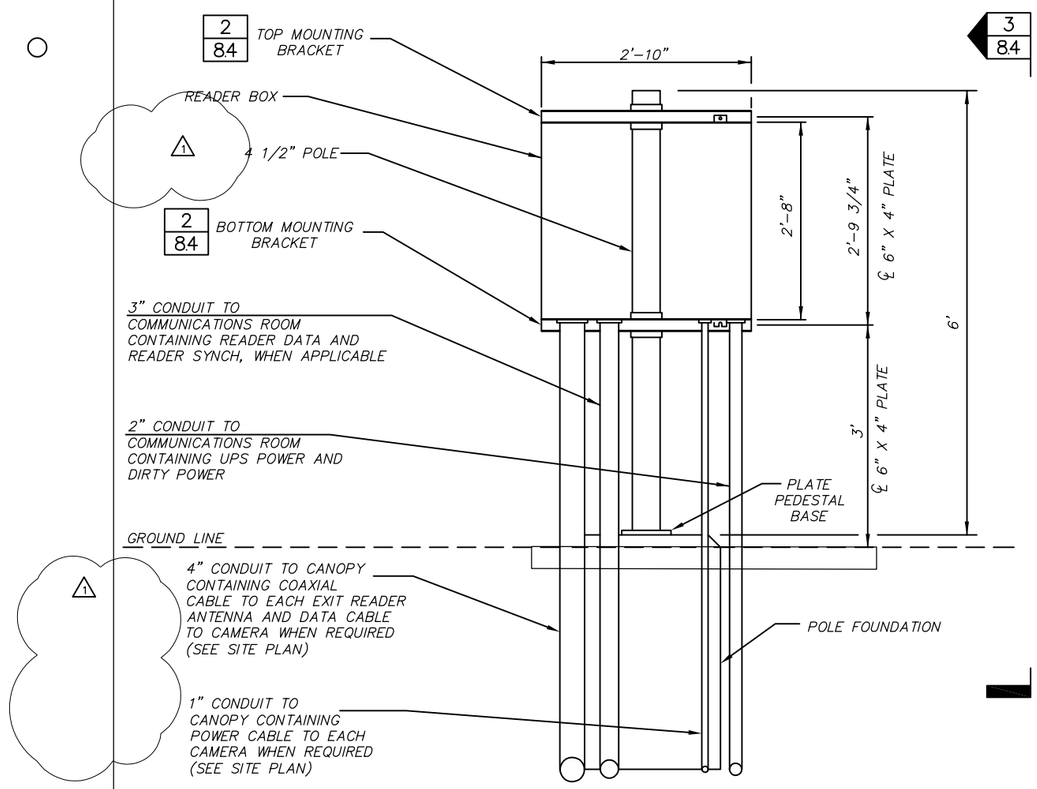

1/84 READER POLE DETAIL

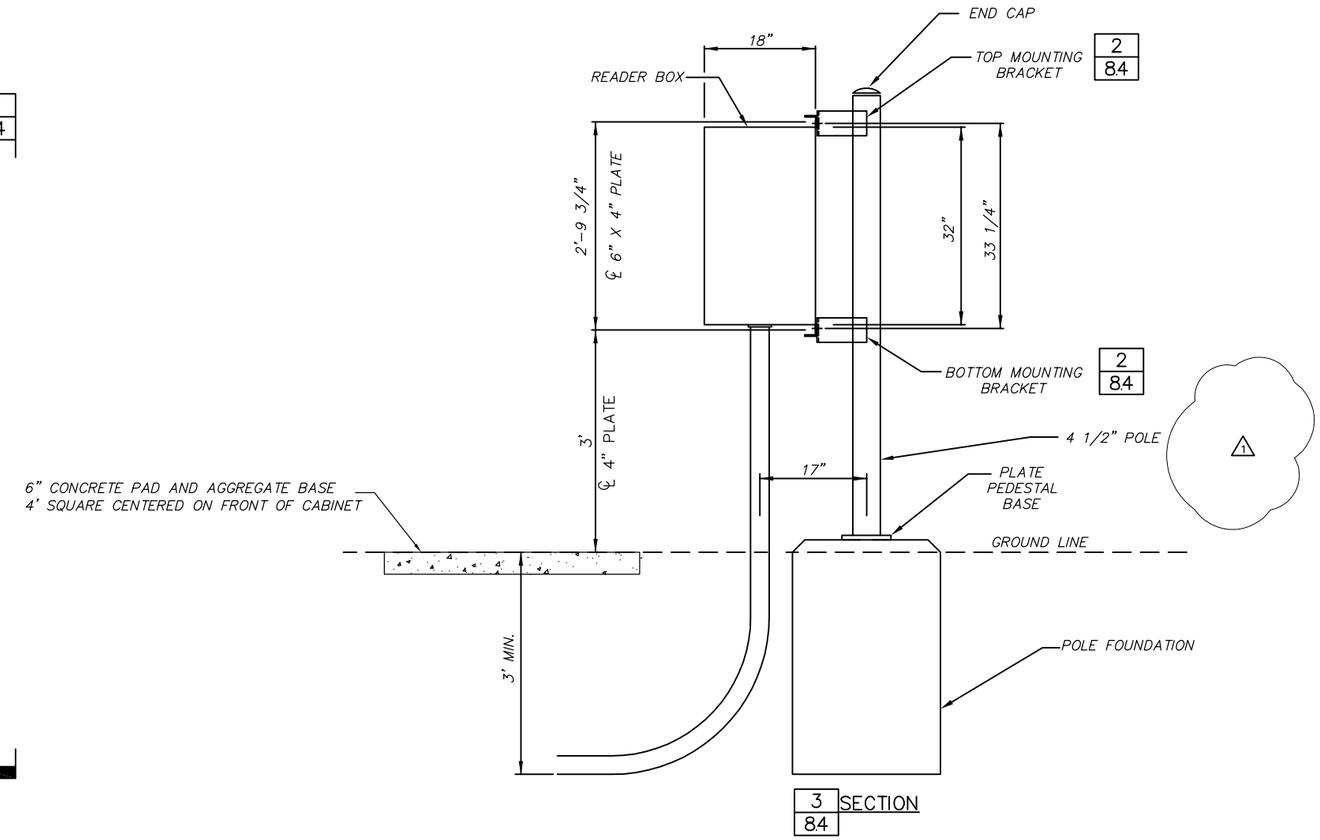

3/8.4 SECTION

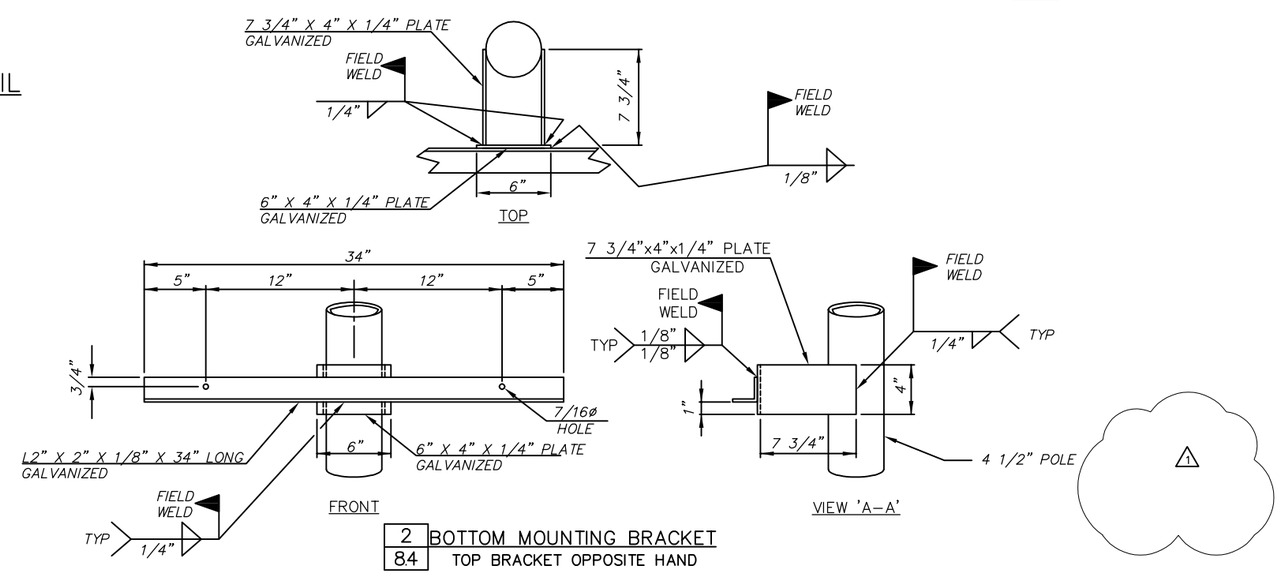

2/84 BOTTOM MOUNTING BRACKET
TOP BRACKET OPPOSITE HAND

NOTE: GALVANIZING SHALL BE GROUND OFF BEFORE WELDING. FIELD WELDED AREAS SHALL BE COATED WITH ASTM A780 PAINT.

1/I116 READER POLE DETAIL
SCALE: N.T.S.

DESIGN AGENCY
PRIME AE
540 White Pond Drive, Ste. E
Akron, Ohio 44320
(330)-864-7755

NO.	REVISIONS	BY	DATE
1	ADDENDUM No. 2	CK	5/12/20
-	-	-	-
-	-	-	-

DESIGNED RNS | CHECKED CEK
DRAWN RNS | IN CHARGE CEK

LUCAS COUNTY
TOLL PLAZA 49

READER POLE DETAIL

PROJECT 58-20-01
DATE: 04/22/2020

I116

197
202

OHIO TURNPIKE AND INFRASTRUCTURE COMMISSION

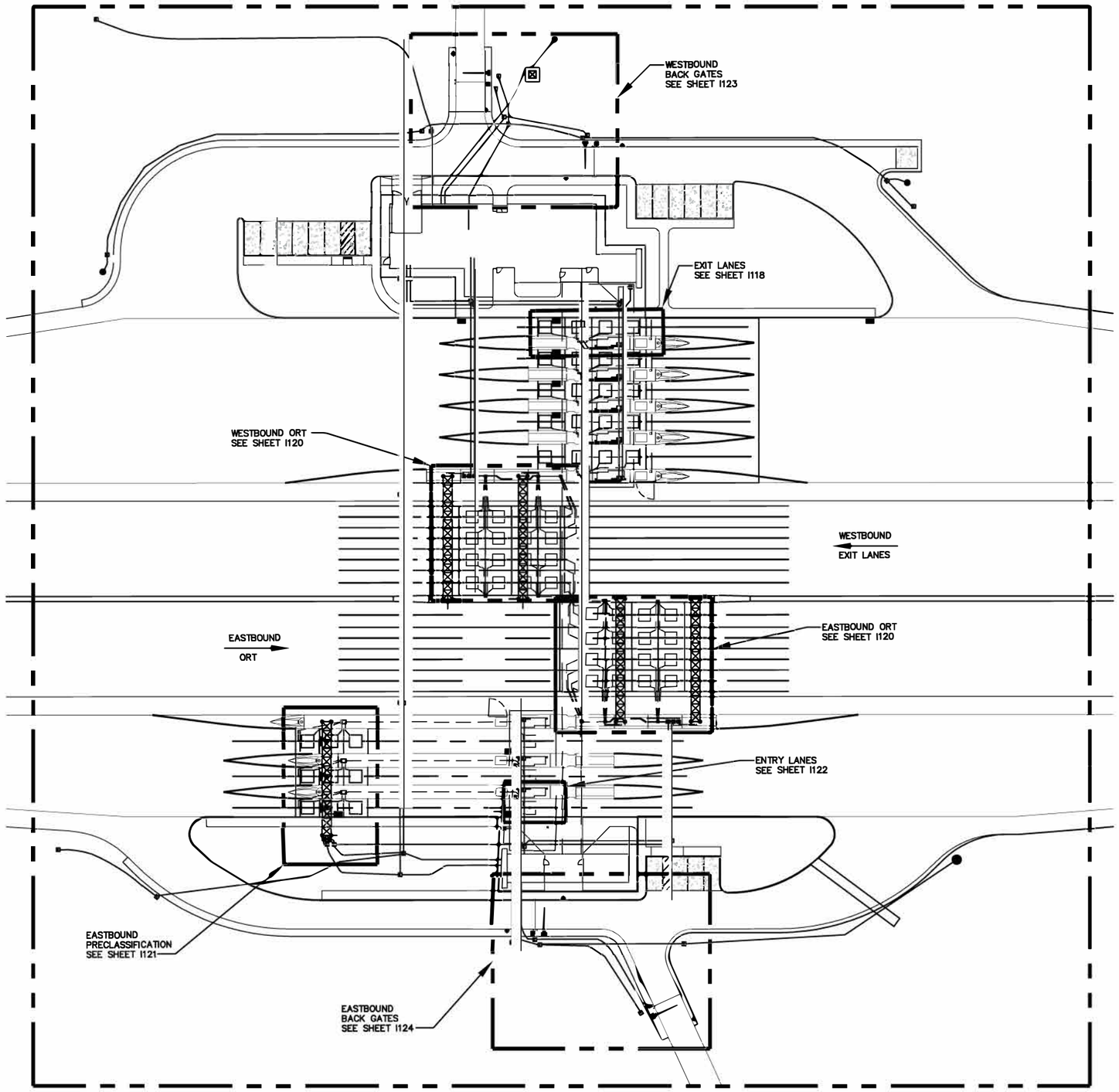

1 ENTIRE SHEET

DESIGN AGENCY
PRIME AE
540 White Pond Drive, Ste. E
Akron, Ohio 44320
(330)-864-7785

NO.	REVISIONS	BY	DATE
1	ADDENDUM No. 2	CK	5/12/20
-	-	-	-

DESIGNED	CHECKED
RNS	CEK
DRAWN	IN CHARGE
RNS	CEK

LUCAS COUNTY

KEY PLAN

TOLL PLAZA 49

PROJECT 58-20-01
DATE: 04/22/2020

I117

198
202

OHIO TURNPIKE AND INFRASTRUCTURE COMMISSION

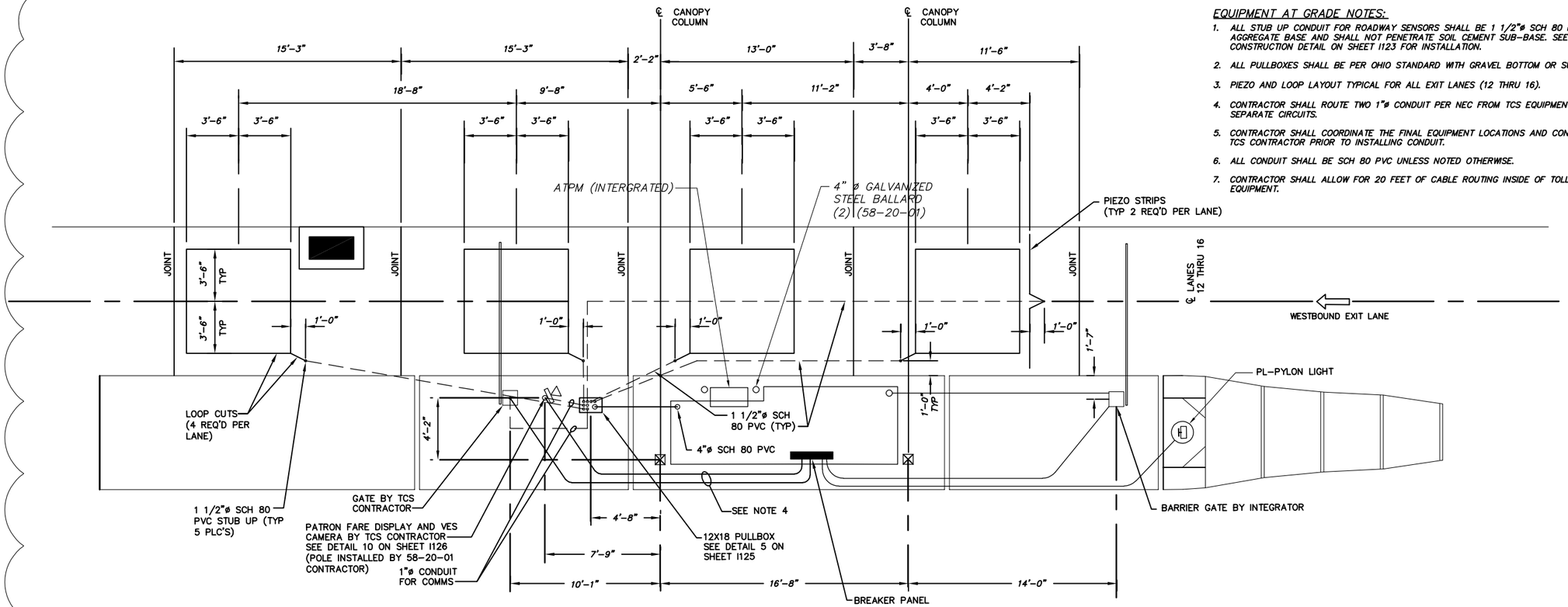

TYPICAL EXIT LANE EQUIPMENT @ GRADE

EQUIPMENT AT GRADE NOTES:

1. ALL STUB UP CONDUIT FOR ROADWAY SENSORS SHALL BE 1 1/2"ø SCH 80 PVC BE ROUTED IN ROADWAY AGGREGATE BASE AND SHALL NOT PENETRATE SOIL CEMENT SUB-BASE. SEE TYPICAL STUB UP CONSTRUCTION DETAIL ON SHEET I123 FOR INSTALLATION.
2. ALL PULLBOXES SHALL BE PER OHIO STANDARD WITH GRAVEL BOTTOM OR SUB SURFACE DRAIN.
3. PIEZO AND LOOP LAYOUT TYPICAL FOR ALL EXIT LANES (12 THRU 16).
4. CONTRACTOR SHALL ROUTE TWO 1"ø CONDUIT PER NEC FROM TCS EQUIPMENT TO BREAKER PANEL ON TWO SEPARATE CIRCUITS.
5. CONTRACTOR SHALL COORDINATE THE FINAL EQUIPMENT LOCATIONS AND CONDUIT PENETRATIONS WITH THE TCS CONTRACTOR PRIOR TO INSTALLING CONDUIT.
6. ALL CONDUIT SHALL BE SCH 80 PVC UNLESS NOTED OTHERWISE.
7. CONTRACTOR SHALL ALLOW FOR 20 FEET OF CABLE ROUTING INSIDE OF TOLL BOOTH TO REACH TCS EQUIPMENT.

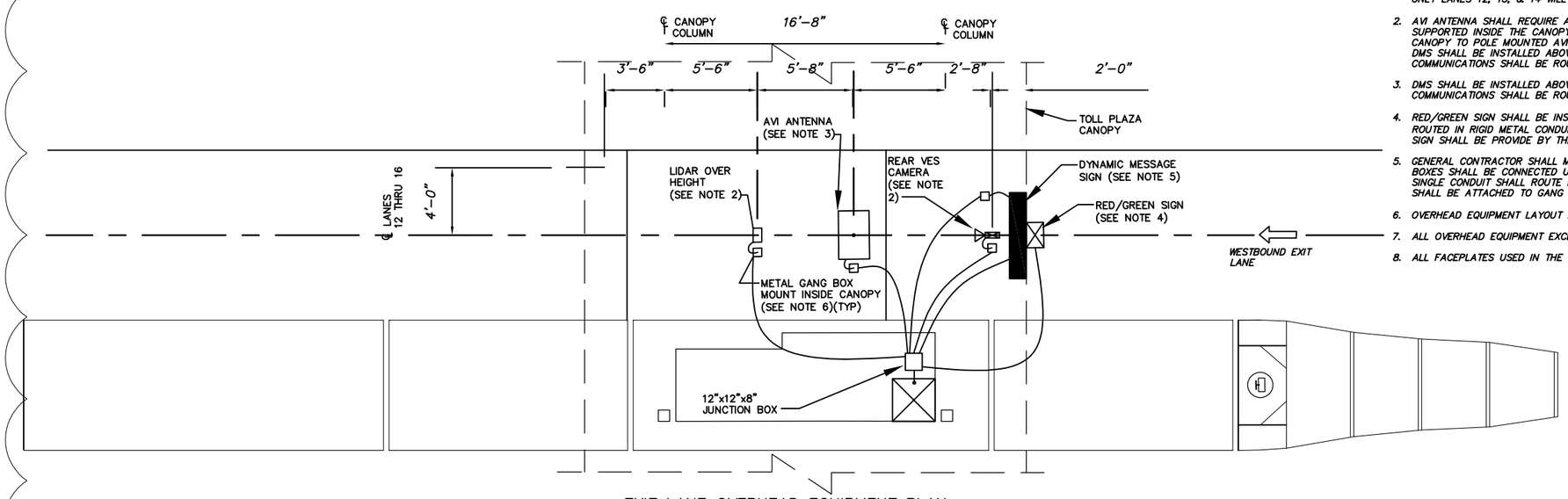

EXIT LANE OVERHEAD EQUIPMENT PLAN

OVERHEAD EQUIPMENT NOTES:

1. LIDAR & REAR VES CAMERA SHALL BE MOUNTED DIRECTLY TO CANOPY METAL FASCIA USING STAINLESS SCREWS BY INTEGRATOR. EQUIPMENT CABLE SHALL ROUTE THROUGH GROMMET HOLE IN GANG BOX COVER. ONLY LANES 12, 13, & 14 WILL HAVE VES CAMERAS.
2. AVI ANTENNA SHALL REQUIRE A 2 1/4"ø HOLE IN METAL FASCIA FOR 2"ø VERTICAL PIPE WHICH WILL BE SUPPORTED INSIDE THE CANOPY WITH SUB-STRUCTURAL STEEL. AVI CABLE SHALL BE ROUTED THROUGH CANOPY TO POLE MOUNTED AVI CABINET NEAR TOLL BUILDING. SEE AVI MOUNT DETAIL ON SHEET I125 DMS SHALL BE INSTALLED ABOVE CANOPY AND TERMINATED BY THE INTEGRATOR. POWER AND COMMUNICATIONS SHALL BE ROUTED IN RIGID METAL CONDUIT OR PLASTIC TO TOLL BOOTH.
3. DMS SHALL BE INSTALLED ABOVE CANOPY AND TERMINATED BY THE INTEGRATOR. POWER AND COMMUNICATIONS SHALL BE ROUTED IN RIGID METAL CONDUIT OR PLASTIC TO TOLL BOOTH.
4. RED/GREEN SIGN SHALL BE INSTALLED AS SHOWN ON THE ARCHITECTURAL DRAWINGS. POWER SHALL BE ROUTED IN RIGID METAL CONDUIT TO THE TOLL BOOTH BY THE 58-20-01 CONTRACTOR. THE RED/GREEN SIGN SHALL BE PROVIDE BY THE INTEGRATOR.
5. GENERAL CONTRACTOR SHALL MOUNT METAL GANG BOX INSIDE CANOPY. ALL LANE EQUIPMENT GANG BOXES SHALL BE CONNECTED USING RIGID METAL CONDUIT TO A SINGLE JUNCTION BOX PER LANE. A SINGLE CONDUIT SHALL ROUTE FROM JUNCTION BOX INTO TOLL BOOTH. COVER PLATES WITH GROMMET SHALL BE ATTACHED TO GANG BOXES FROM OUTSIDE CANOPY.
6. OVERHEAD EQUIPMENT LAYOUT AND CONDUIT ROUTING TYPICAL FOR ALL EXIT LANES (12 THRU 16).
7. ALL OVERHEAD EQUIPMENT EXCEPT AVI ANTENNAS SHALL ROUTE TO TOLL BOOTH THROUGH THE CANOPY.
8. ALL FACEPLATES USED IN THE CANOPY CEILING SHALL BE PAINTED TO MATCH THE CANOPY.

1 ENTIRE SHEET

DESIGN AGENCY
PRIME AE
540 White Pond Drive, Ste. E
Akron, Ohio 44320
(330)864-7755

NO.	REVISIONS	BY	DATE
1	ADDENDUM No. 2	CK	5/12/20
-	-	-	-

DESIGNED	CHECKED
RNS	CEK
DRAWN	IN CHARGE
RNS	CEK

TYPICAL EXIT LANE EQUIPMENT

LUCAS COUNTY

TOLL PLAZA 49

PROJECT 58-20-01

DATE: 04/22/2020

I118

OHIO TURNPIKE AND INFRASTRUCTURE COMMISSION

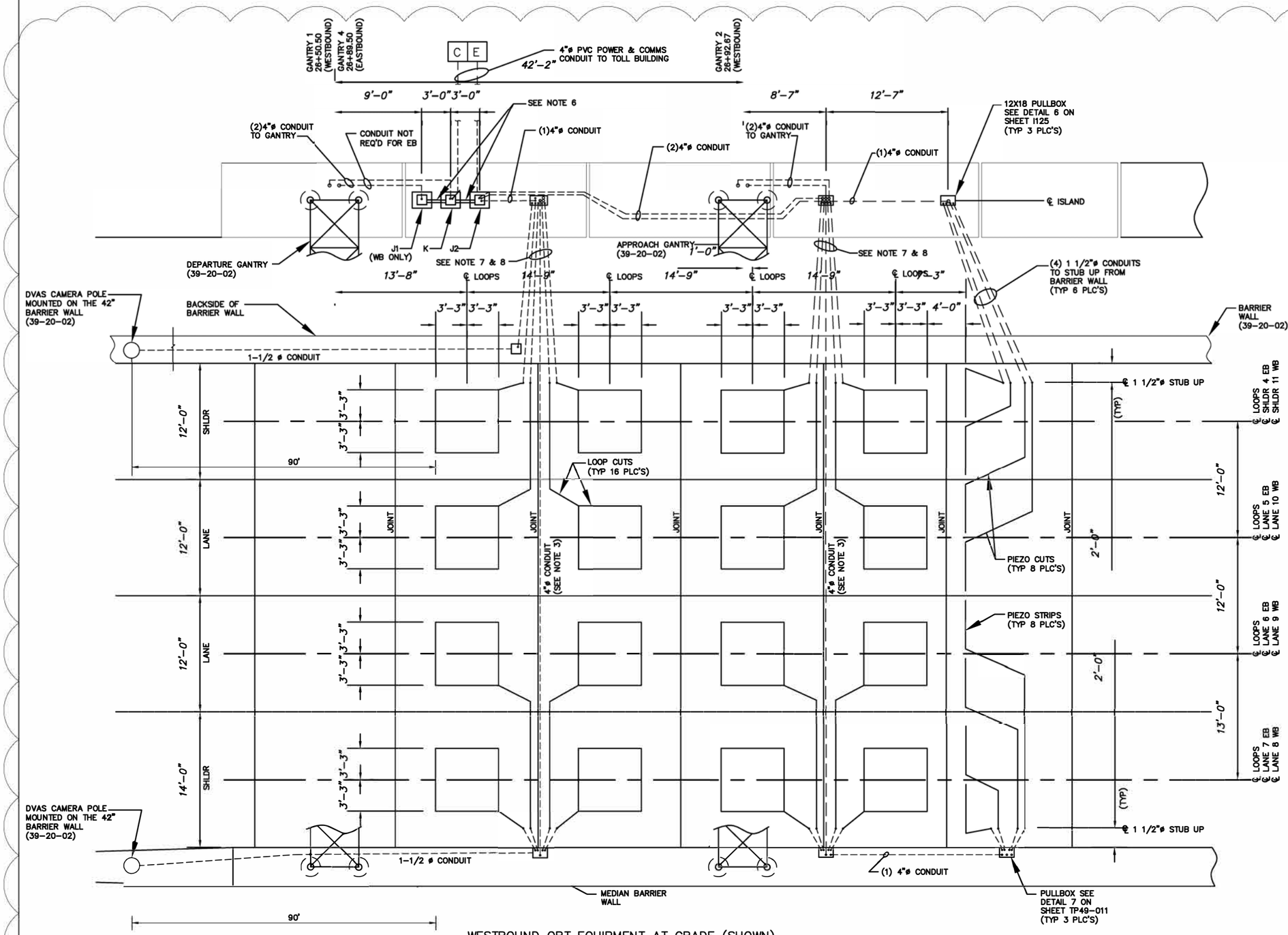

WESTBOUND ORT EQUIPMENT AT GRADE (SHOWN)
EASTBOUND ORT EQUIPMENT AT GRADE (OPP HAND MIRRORED)

ORT EQUIPMENT AT GRADE NOTES:

1. ALL CONDUIT SHALL BE SCH 80 PVC UNLESS NOTED OTHERWISE.
2. ALL STUB UP CONDUIT FOR ROADWAY SENSORS SHALL BE 1 1/2"ø SCH 80 PVC. ALL STUB UP CONDUIT SHALL BE ROUTED IN ROADWAY AGGREGATE BASE AND SHALL NOT PENETRATE SOIL CEMENT SUB-BASE.
3. THE 3" CONDUIT CROSSING ORT ROADWAY SHALL HAVE 30" COVER FROM TOP OF PAVING. EXTEND 30" FROM BARRIER WALL TO JUNCTION BOX.
4. ALL PULLBOXES SHALL BE PER OHIO STANDARD.
5. CABINETS J1, K AND J2 ARE GROUND MOUNTED MCCAIN TRAFFIC CABINETS.
6. GROUND MOUNTED CABINETS SHALL HAVE (2) 4"ø RIGID METAL CONDUIT TO CONNECT TO CABINETS ABOVE GRADE. CONDUIT SHALL BE FOR SEPARATE POWER AND COMMS AND SHALL BE LOCATED AT THE BOTTOM OF THE CABINETS.
7. THE 39-20-02 CONTRACTOR IS INSTALLING THE ORT CONCRETE, AII 4 GANTRIES OVER THE MAINLINE AND ALL UNDER GROUND CONDUIT WILL BE STUBED OUT FROM THE BACKSIDE OF THE BARRIER WALL. EXTEND (4 OR 5) 1 1/2"ø CONDUITS AND (1) 4"ø CONDUIT FROM THE BARRIER WALL TO THE JUNCTION BOXS.
8. THE 58-20-01 CONTRACTOR SHALL PROVIDE THE WIRE PER SHEET I121.
9. THE CONTRACTOR SHALL OMIT THE J1 CABINET AND ASSOCIATED GANTRY CONDUIT FOR THE EASTBOUND ORT ONLY. THE CABINET LOCATIONS AND CONDUIT FOR K AND J2 WILL REMAIN THE SAME.

△1 ENTIRE SHEET

DESIGN AGENCY
PRIME AE
540 White Pond Drive, Ste. E
Akron, Ohio 44320
(330)-864-7755

NO.	REVISIONS	BY	DATE
1	ADDENDUM No. 2	CK	5/12/20
-	-	-	-

DESIGNED	CHECKED	DRAWN	IN CHARGE
RNS	CEK	RNS	CEK

TYPICAL ORT OVERHEAD EQUIPMENT

TOLL PLAZA 49 — LUCAS COUNTY

PROJECT 58-20-01
DATE: 04/22/2020

I119

OHIO TURNPIKE AND INFRASTRUCTURE COMMISSION

ORT OVERHEAD NOTES:

1. COIL 5'-0" OF EQUIPMENT CABLE AT EACH EQUIPMENT LOCATION AND EQUIPMENT ENCLOSURE SHOWN..
2. VERTICAL GANTRY PVC SHALL BE PER GANTRY ELEVATION AND DETAIL DRAWING.
3. ALL EQUIPMENT CABLE SHALL ROUTE IN CABLE TRAY.
4. THE 58-20-01 CONTRACTOR SHALL PROVIDE ALL CABLE AND CONDUIT. THE INTEGRATOR SHALL TERMINATE AND TEST ALL WIRING.
5. EQUIPMENT AND MOUNTING HARDWARE SHALL BE PROVIDED BY INTEGRATOR AND INSTALLED BY THE 58-20-01 CONTRACTOR.
6. BOTTOM OF GANTRY SHALL BE 22'-0" +/- ABOVE ROADWAY. GANTRY HEIGHT IS 5'-0" CHORD TO CHORD.

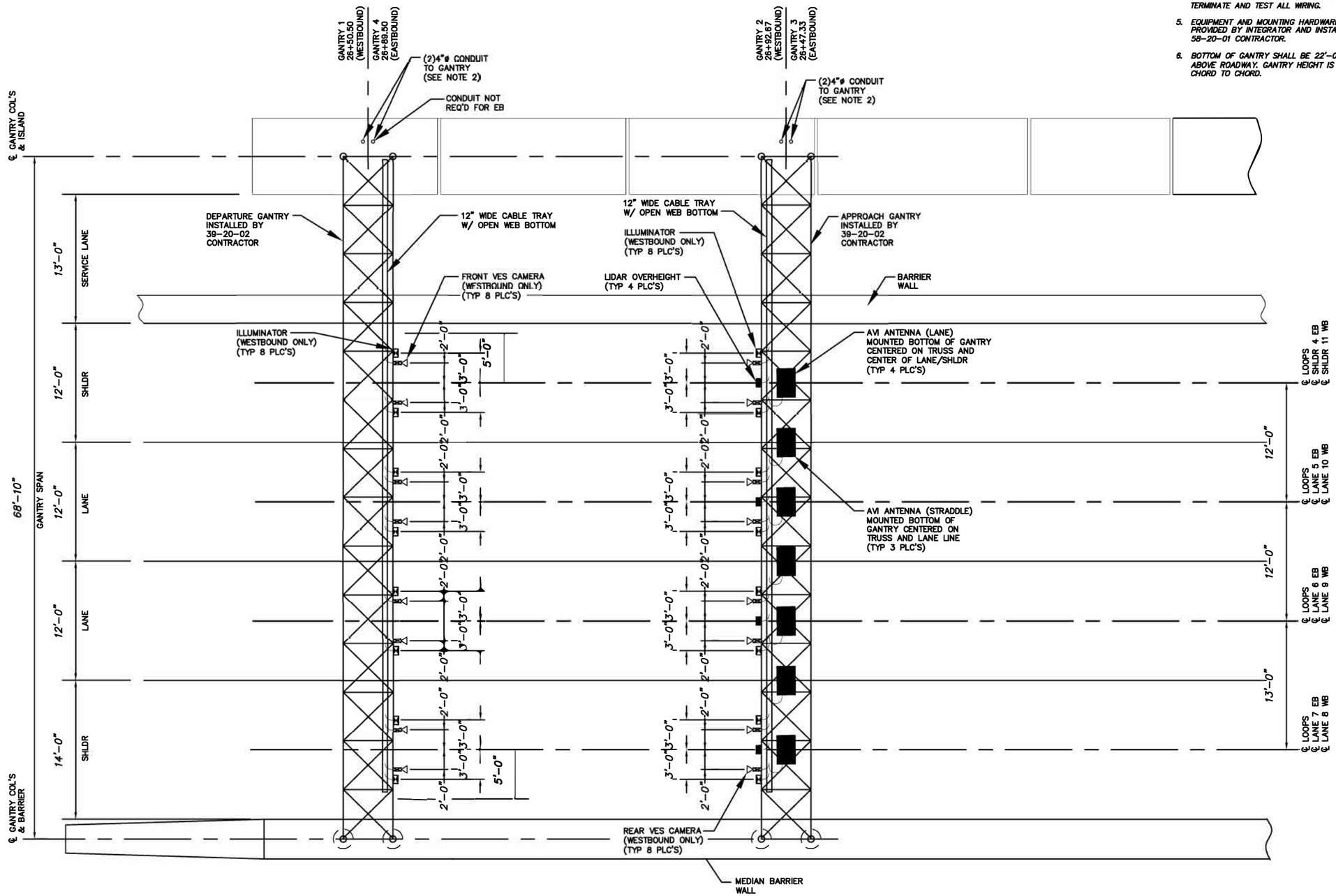

△1 ENTIRE SHEET

DESIGN AGENCY
PRIME EV
540 White Pond Drive, Ste. E
Akron, Ohio 44320
(330)-864-7755

NO.	REVISIONS	BY	DATE
1	ADDENDUM No. 2	CK	5/12/20
–	–	–	–

DESIGNED	CHECKED
RNS	CEK
DRAWN	IN CHARGE
RNS	CEK

TYPICAL ORT OVERHEAD EQUIPMENT

TOLL PLAZA 49 — LUCAS COUNTY

PROJECT 58-20-01
DATE: 04/22/2020

I120

201 / 202

OHIO TURNPIKE AND INFRASTRUCTURE COMMISSION

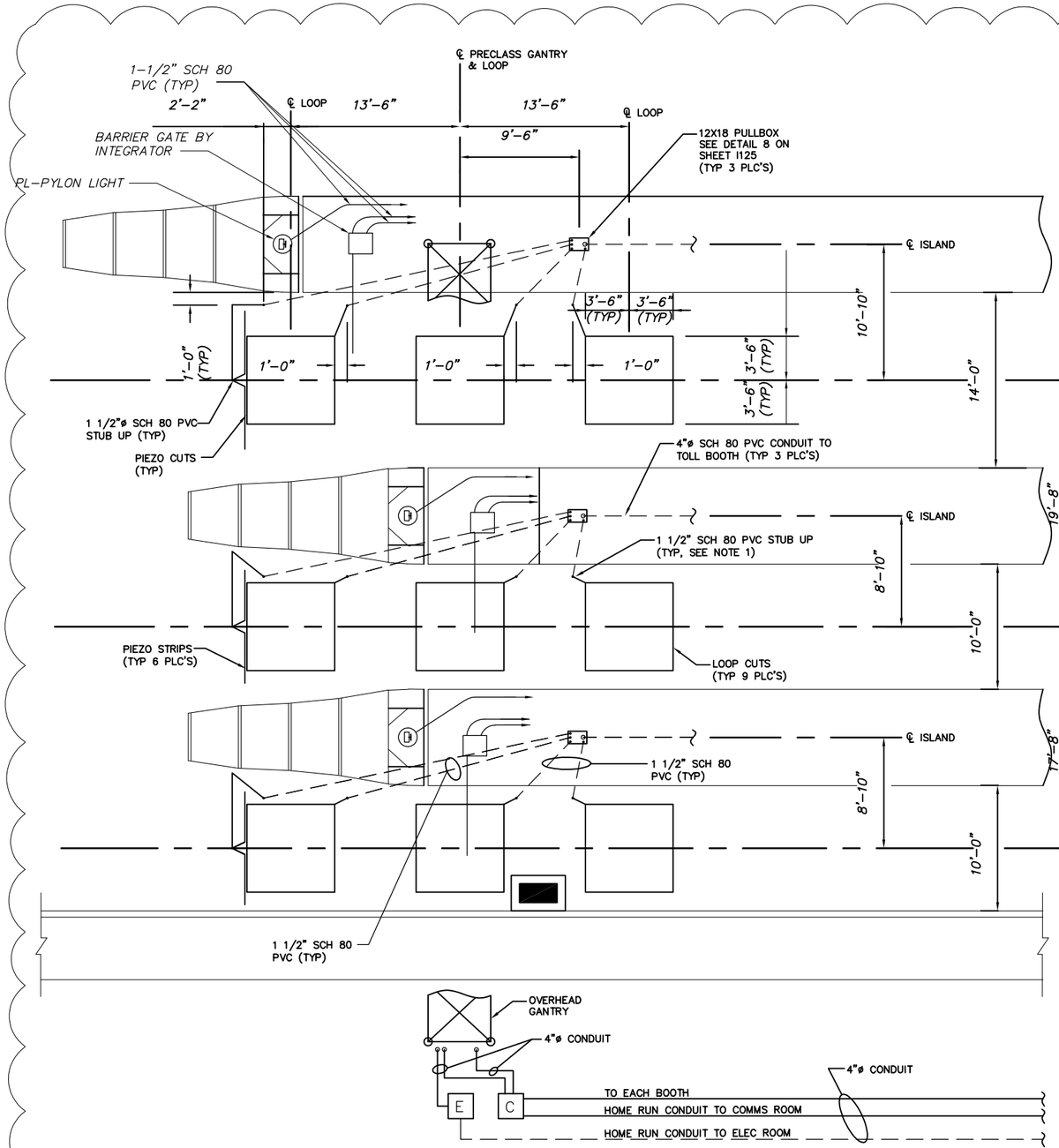

TYPICAL PRECLASSIFICATION EQUIPMENT @ GRADE

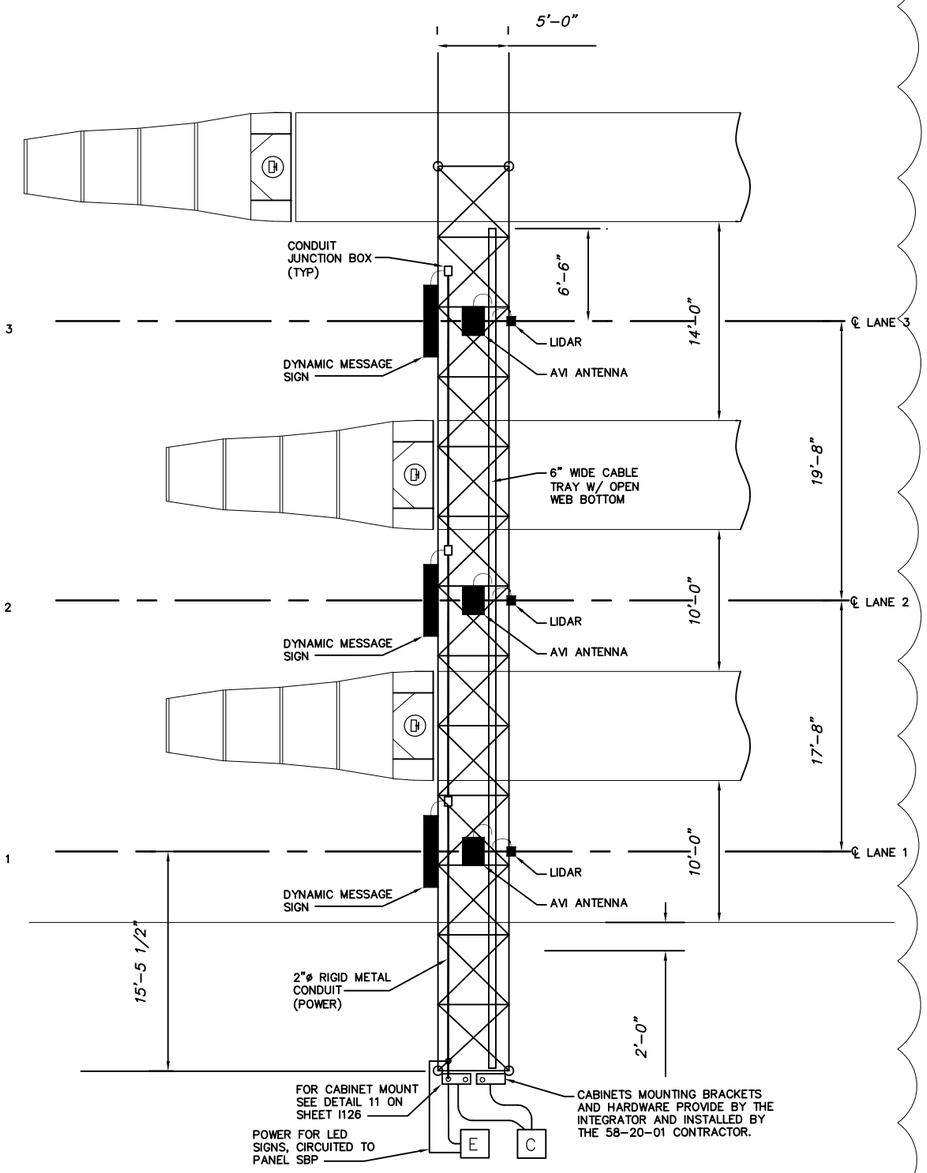

PRECLASSIFICATION OVERHEAD EQUIPMENT PLAN

PRECLASSIFICATION AT GRADE NOTES:

1. ALL STUB UP CONDUIT FOR ROADWAY SENSORS SHALL BE 1 1/2"ø SCH 80 PVC. ALL STUB UP CONDUIT SHALL BE ROUTED IN ROADWAY AGGREGATE BASE AND SHALL NOT PENETRATE SOIL CEMENT SUB-BASE. SEE STANDARD EPOXY POCKET DETAIL.
2. ALL PULL BOXES SHALL BE PER OHIO STANDARD WITH GRAVEL BOTTOM OR SUBSURFACE DRAIN.
3. PIEZO AND LOOP LAYOUT TYPICAL FOR ALL ENTRY LANES. SEE SAWCUT DETAILS ON SHT I123.

PRECLASSIFICATION OVERHEAD NOTES:

1. THE DIGITAL MESSAGE SIGN (DMS) SHALL BE MOUNTED TO SIDE OF TRUSS AND TERMINATED BY INTEGRATOR.
2. AVI ANTENNA, LIDAR, AND DVAS BRACKETS SHALL BE MOUNTED TO BOTTOM OF GANTRY TRUSS.
3. CONTRACTOR SHALL LOOP 5'-0" OF EQUIPMENT CABLE AT EACH EQUIPMENT LOCATION.
4. POWER FOR DIGITAL MESSAGE SIGN SHALL ROUTE IN 2" CONDUIT VIA JUNCTION BOXES IN TRUSS. DMS COMMS SHALL ROUTE IN CABLE TRAY.
5. GANTRY CABINET MOUNTS SHALL BE PER GANTRY ELEVATION & DETAIL DRAWING.
6. GANTRY CABINETS AND HARDWARE SHALL BE PROVIDED BY THE INTEGRATOR.
7. CONTRACTOR SHALL PROVIDE ALL CABLE AND CONDUIT REQUIRED.
8. EQUIPMENT MOUNTING HARDWARE SHALL BE PROVIDED BY THE INTEGRATOR AND INSTALLED BY THE 58-20-01 CONTRACTOR. 1 ENTIRE SHEET
9. EQUIPMENT AND MOUNTING HARDWARE SHALL BE PROVIDED BY THE INTEGRATOR.

DESIGN AGENCY
PRIME AE
540 White Pond Drive, Ste. E
Akron, Ohio 44320
(330)-864-7755

NO.	REVISIONS	BY	DATE
1	ADDENDUM No. 2	CK	5/12/20
-	-	-	-

DESIGNED	CHECKED
RNS	CEK
DRAWN	IN CHARGE
RNS	CEK

TYPICAL ENTRY LANE EQUIPMENT
PRECLASS EQUIPMENT
TOLL PLAZA 49 LUCAS COUNTY

PROJECT 58-20-01
DATE: 04/22/2020

OHIO TURNPIKE AND INFRASTRUCTURE COMMISSION

I121

202
202

ENTRY LANE EQUIPMENT NOTES:

1. ALL STUB UP CONDUIT FOR ROADWAY SENSORS SHALL BE 1 1/2"ø SCH 80 PVC BE ROUTED IN ROADWAY AGGREGATE BASE AND SHALL NOT PENETRATE SOIL CEMENT SUB-BASE. SEE STANDARD EPOXY POCKET DETAIL FOR INSTALLATION.
2. ALL PULLBOXES SHALL BE PER OHIO STANDARD WITH GRAVEL BOTTOM OR SUB SURFACE DRAIN.
3. LOOP AND EQUIPMENT LAYOUT TYPICAL FOR ALL EXIT LANES (1 THRU 3).
4. ROUTE ONE 1"ø CONDUIT PER NEC FROM TCS EQUIPMENT TO BREAKER PANEL ON TWO SEPARATE CIRCUITS.
5. RED/GREEN SIGN SHALL BE INSTALLED AS SHOWN ON THE ARCHITECTURAL DRAWINGS. POWER SHALL BE ROUTED IN RIGID METAL CONDUIT TO THE TOLL BOOTH BY THE 58-20-01 CONTRACTOR. THE RED/GREEN SIGN SHALL BE PROVIDED BY THE INTEGRATOR.

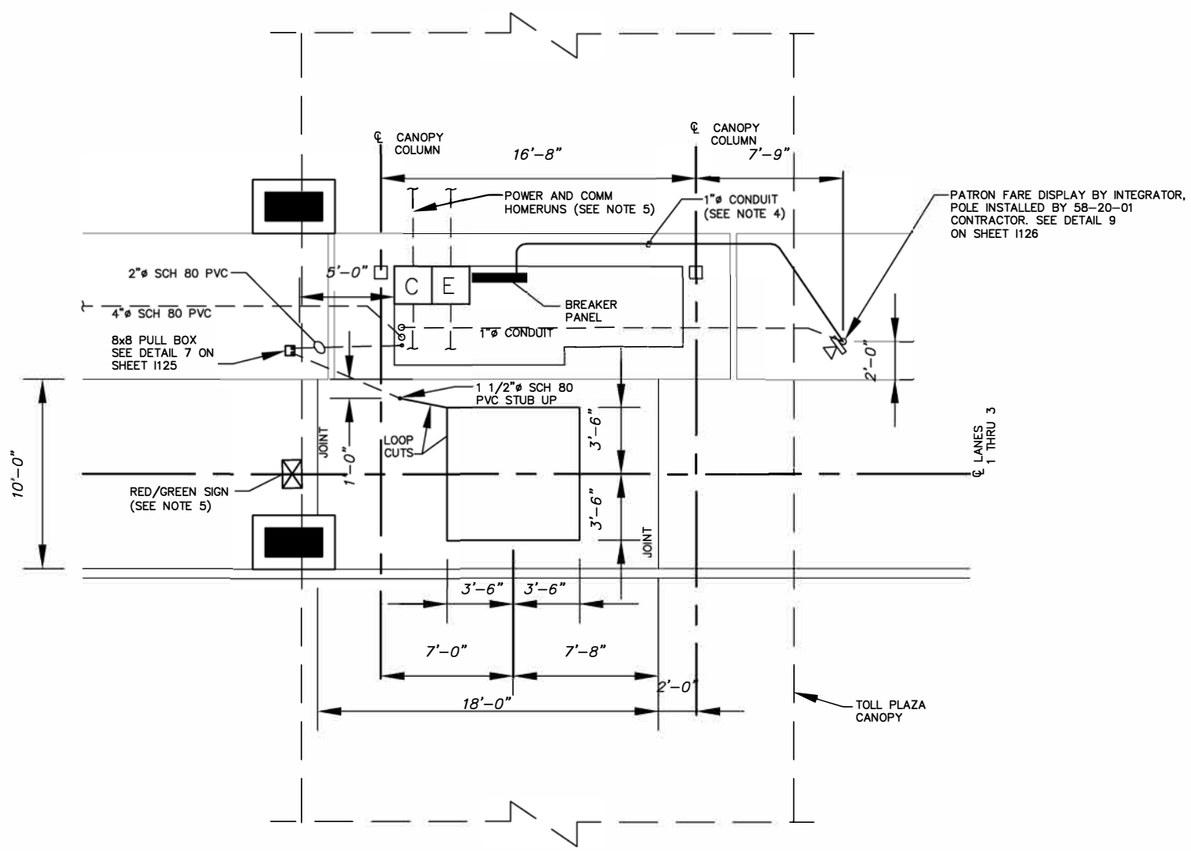

TYPICAL ENTRY LANE EQUIPMENT

△1 ENTIRE SHEET

DESIGN AGENCY
PRIME AE
540 White Pond Drive, Ste. E
Akron, Ohio 44320
(330)-864-7755

NO.	REVISIONS	BY	DATE
1	ADDENDUM No. 2	CK	5/12/20
–	–	–	–

DESIGNED	CHECKED
RNS	CEK
DRAWN	IN CHARGE
RNS	CEK

TYPICAL ENTRY LANE EQUIPMENT

LUCAS COUNTY

TOLL PLAZA 49

PROJECT 58-20-01

DATE: 04/22/2020

I122

202A
202

OHIO TURNPIKE AND INFRASTRUCTURE COMMISSION

NOTES:

1. 58-20-01 CONTRACTOR SHALL ROUTE AVI & CITILOG XCAM CABLES THROUGH POLE AND MAST ARM TO EQUIPMENT. INSTALL RUBBER GROMMET TO PROTECT WIRE AT EXIT POINT. COIL 5'-0" OF WIRE AT EACH EQUIPMENT LOCATION.
2. CONTRACTOR SHALL MOUNT CABINET ON POLE USING STAINLESS STEEL STRAPS. INSTALL NIPPLE BETWEEN CABINET AND POLE FOR CABLE ENTRY. CABINET SHALL BE SUPPLIED BY INTEGRATOR AND INSTALLED BY 58-20-01 CONTRACTOR.
3. 58-20-01 CONTRACTOR SHALL INSTALL ALL ACCESS GATES, CONDUIT, WIRE AND POLE INFRASTRUCTURE. INTEGRATOR SHALL INSTALL TCS EQUIPMENT, TEST AND TERMINATE WIRE.

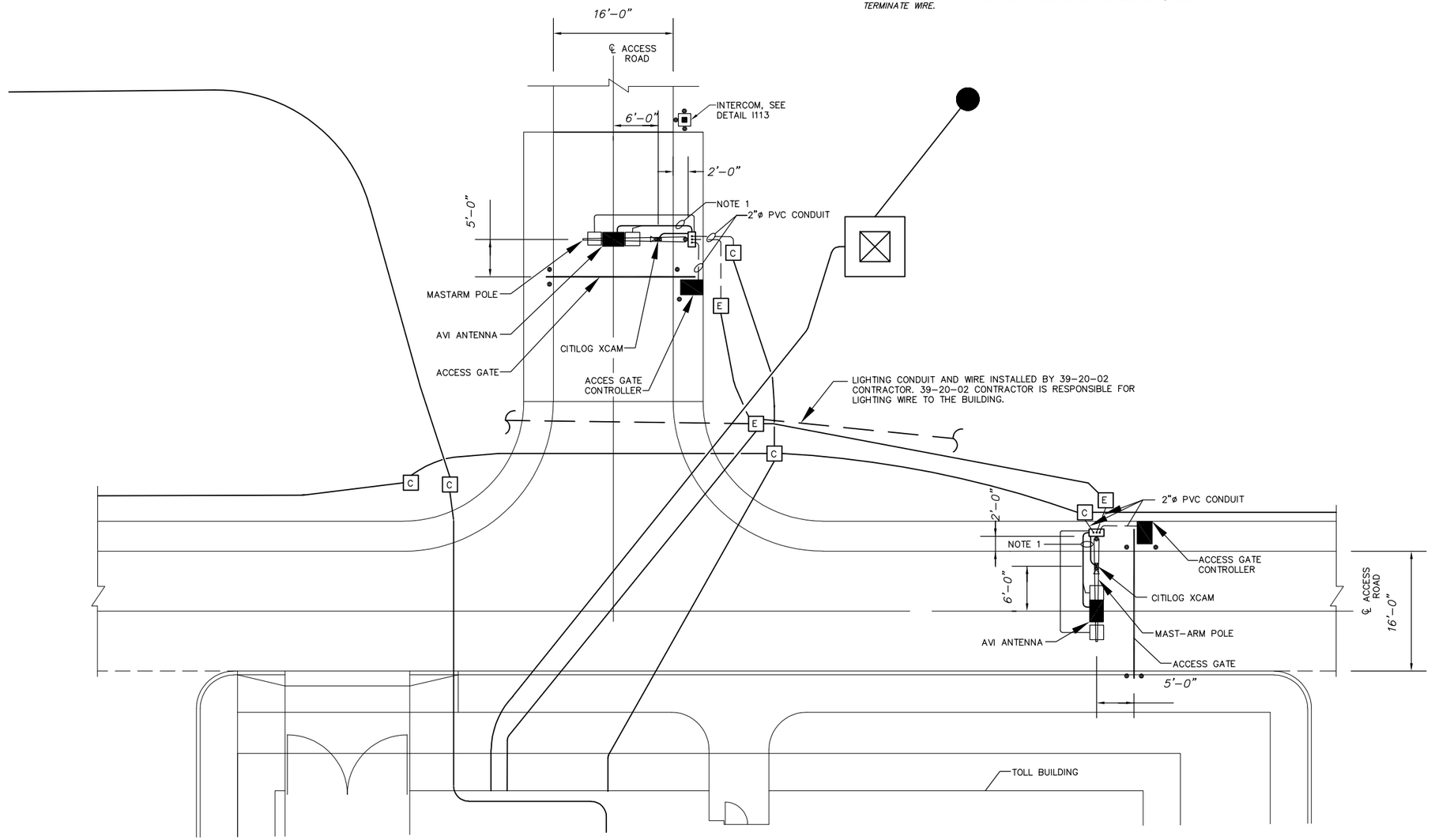

1 ENTIRE SHEET

DESIGN AGENCY
PRIME AE
540 White Pond Drive, Ste. E
Akron, Ohio 44320
(330)-864-7755

NO.	REVISIONS	BY	DATE
1	ADDENDUM No. 2	CK	5/12/20
-	-	-	-

DESIGNED	CHECKED
RNS	CEK
DRAWN	IN CHARGE
RNS	CEK

WB BACKGATE EQUIPMENT

TOLL PLAZA 49

LUCAS COUNTY

PROJECT 58-20-01

DATE: 04/22/2020

I123

202B
202

OHIO TURNPIKE AND INFRASTRUCTURE COMMISSION

NOTES:

1. 58-20-01 CONTRACTOR SHALL ROUTE AVI & CITILOG XCAM CABLES THROUGH POLE AND MAST ARM TO EQUIPMENT. INSTALL RUBBER GROMMET TO PROTECT WIRE AT EXIT POINT. COIL 5'-0" OF WIRE AT EACH EQUIPMENT LOCATION.
2. CONTRACTOR SHALL MOUNT CABINET ON POLE USING STAINLESS STEEL STRAPS. INSTALL NIPPLE BETWEEN CABINET AND POLE FOR CABLE ENTRY. CABINET SHALL BE SUPPLIED BY INTEGRATOR AND INSTALLED BY 58-20-01 CONTRACTOR.
3. 58-20-01 CONTRACTOR SHALL INSTALL ALL ACCESS GATES, CONDUIT, WIRE AND POLE INFRASTRUCTURE. INTEGRATOR SHALL INSTALL TCS EQUIPMENT, TEST AND TERMINATE WIRE.

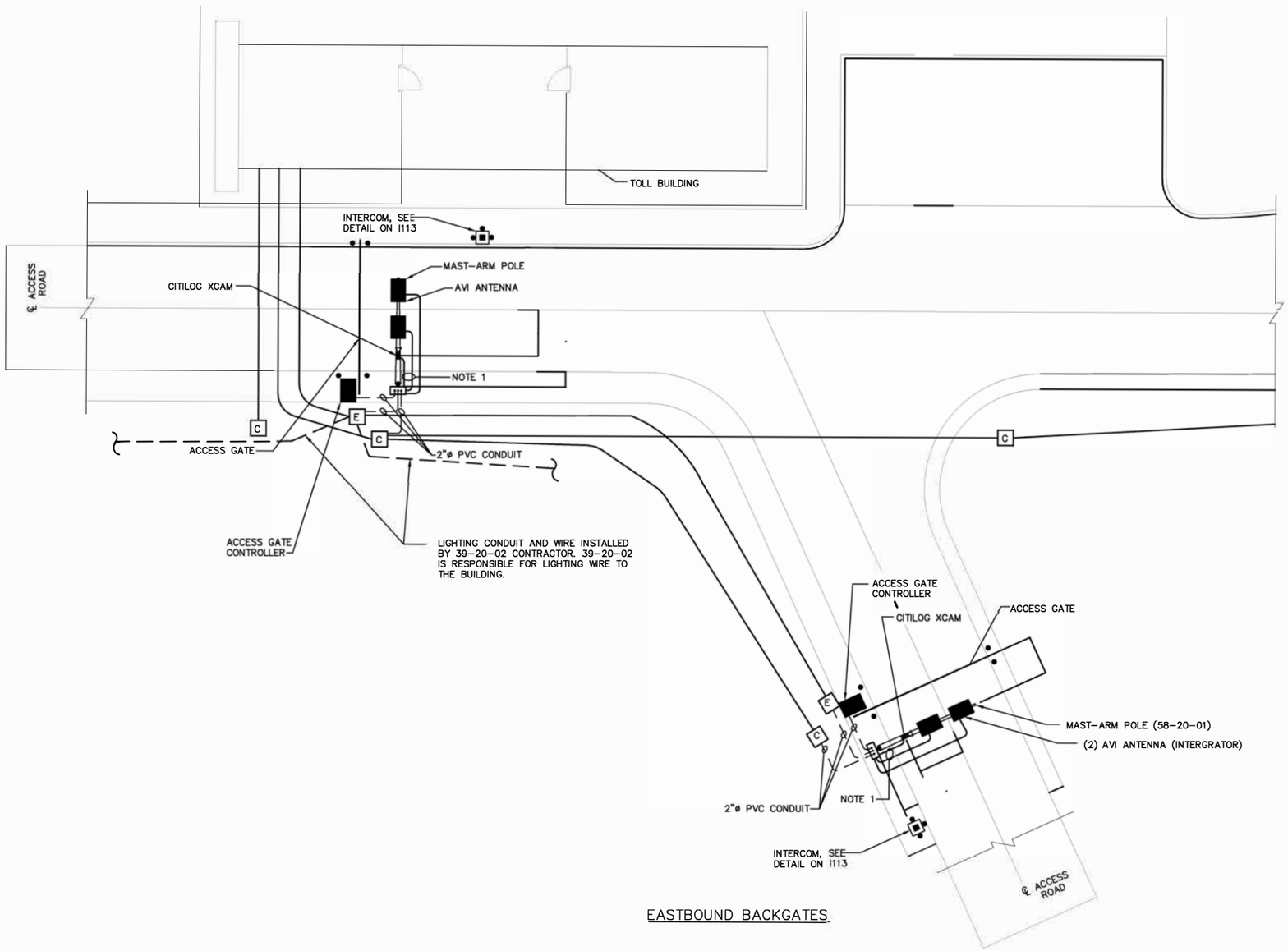

EASTBOUND BACKGATES

△1 ENTIRE SHEET

DESIGN AGENCY
PRIME EA
540 White Pond Drive, Ste E
Akron, Ohio 44320
(330)-864-7755

NO.	REVISIONS	BY	DATE
1	ADDENDUM No. 2	CK	5/12/20
-	-	-	-

DESIGNED RNS
CHECKED CEK
DRAWN RNS
IN CHARGE CEK

EB BACKGATE EQUIPMENT
TOLL PLAZA 49
LUCAS COUNTY

PROJECT 58-20-01
DATE: 04/22/2020

I124

202C
202

OHIO TURNPIKE AND INFRASTRUCTURE COMMISSION

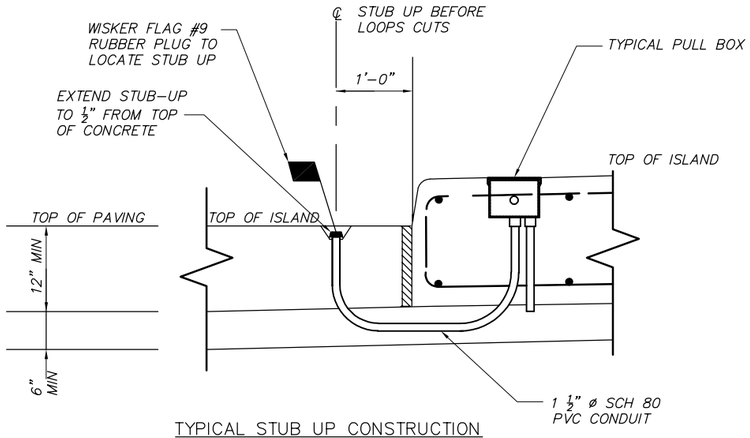

TYPICAL STUB UP CONSTRUCTION
DETAIL 1
3/4"=1'-0"

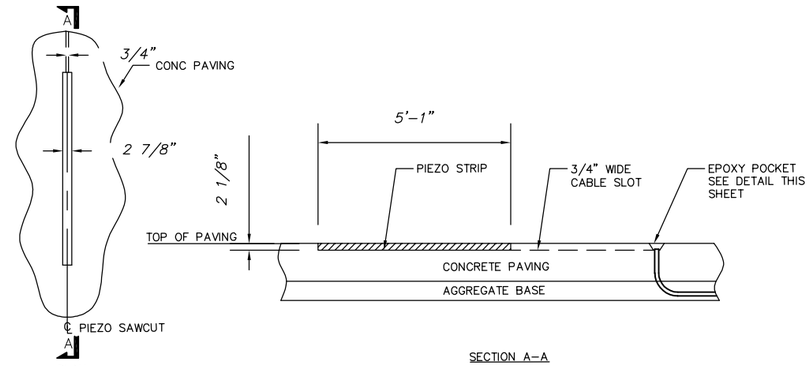

TYPICAL PIEZO CUT
DETAIL 2
1/2"=1'-0"

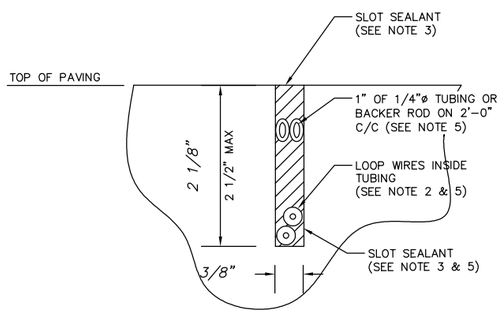

TYPICAL LOOP CUT
DETAIL 3
1"=1'-0"

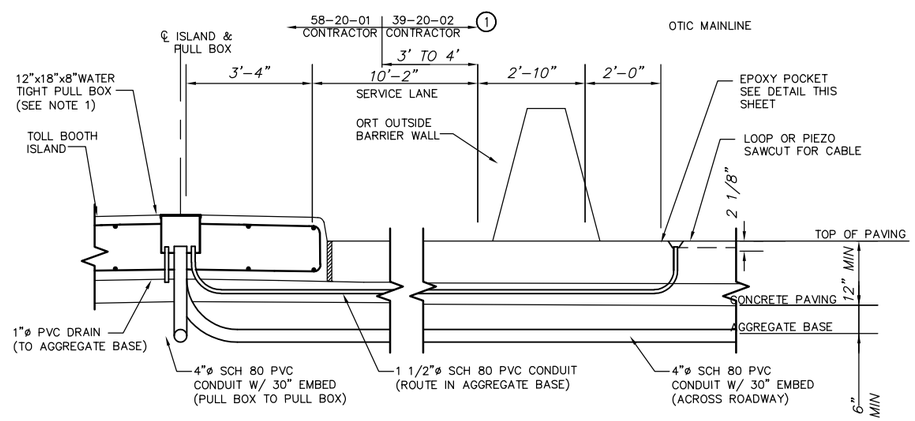

ORT ISLAND PULL BOX
DETAIL 4
1/2"=1'-0"

GENERAL NOTE:

1. THE 39-20-02 CONTRACTOR IS RESPONSIBLE FOR ALL SAW CUTTING, EPOXY POCKET AND CONDUIT IN THE ORT LANES.
2. THE 58-20-01 CONTRACTOR IS RESPONSIBLE FOR ALL SAW CUTTING, EPOXY POCKET AND CONDUIT IN THE TOLL PLAZA LANES.
3. THE 58-20-01 CONTRACTOR SHALL CUT LOOPS AND CREATE EPOXY POCKET BY CHIPPING OUT POCKET TO REMOVE STUB UP RUBBER PLUG. INTEGRATOR SHALL INSTALL SENSOR WIRE BEFORE PLUGGING CONDUIT AND SEALING CUT AND POCKET WITH EPOXY.

PULL BOX NOTES:

1. PULL BOX SHALL HAVE HEAVY DUTY CHECKERED SIDEWALK COVER, GASKETED WITH STAINLESS STEEL HARDWARE, CROUSE HINDS WJBF OR APPROVED EQUAL.
2. SEE PLANS FOR PLACEMENT OF PULL BOX AND ROUTING OF CONDUIT.

LOOP CUT NOTES:

1. MINIMUM SAW DEPTH IS 2", MAX SAW DEPTH IS 2 1/2".
2. LOOP DETECTOR WIRE IN TUBING SHALL BE SPECIFIED IN INTEGRATOR CABLE SCHEDULE. (INTEGRATOR)
3. LOOP DETECTOR SEALANT SHALL BE A PREQUALIFIED PRODUCT IN ACCORDANCE WITH SUPPLEMENT 1048. (INTEGRATOR)
4. LENGTH AND WIDTH OF LOOP CUTS SHALL BE AS SPECIFIED IN PLANS.
5. THE INTEGRATOR IS RESPONSIBLE FOR INSTALLING LOOP WIRE, PIEZO WIRE AND EPOXYING THE SAW CUTS.

KEY NOTES:

1 39-20-02- CONTRACTOR WORK

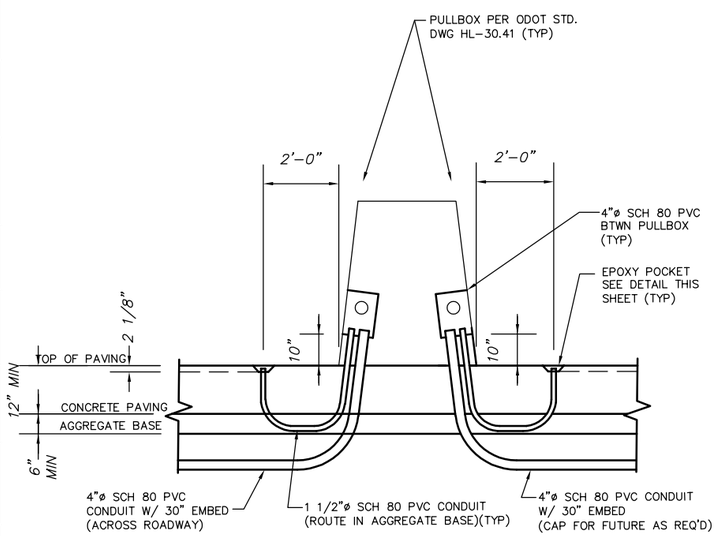

ORT LOOPS TO MEDIAN PULL BOX 1
DETAIL 5
1/2"=1'-0"

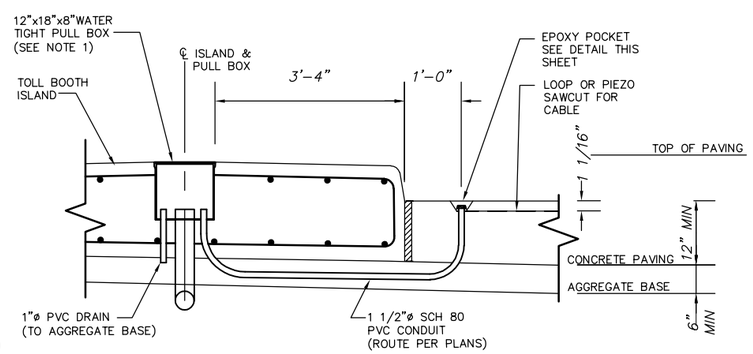

PRECLASS ISLAND PULL BOX
DETAIL 6
3/4"=1'-0"

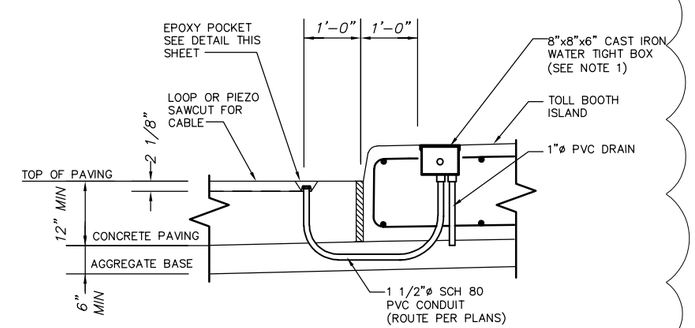

ENTRY LANE ISLAND PULL BOX
DETAIL 7
3/4"=1'-0"

1 ENTIRE SHEET

DESIGN AGENCY
PRIME AE
540 White Pond Drive, Ste. E
Akron, Ohio 44320
(330)-864-7755

NO.	REVISIONS	BY	DATE
1	ADDENDUM No. 2	CK	5/12/20

DESIGNED RNS | CHECKED CEK
DRAWN RNS | IN CHARGE CEK

LUCAS COUNTY

TYPICAL DETAILS

TOLL PLAZA 49

PROJECT 58-20-01
DATE: 04/22/2020

I125

202D
202

OHIO TURNPIKE AND INFRASTRUCTURE COMMISSION

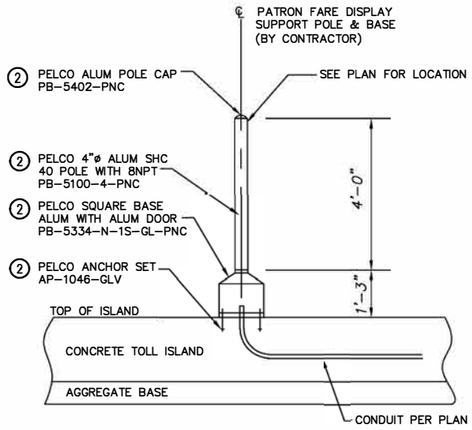

PATRON FARE DISPLAY SUPPORT
DETAIL 9

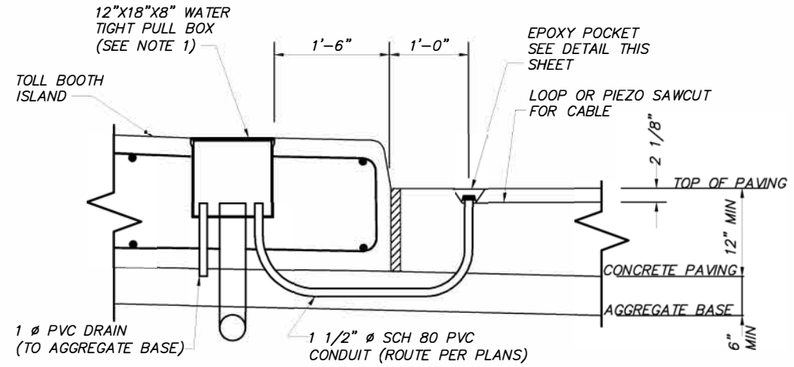

EXIT LANE ISLAND PULL BOX
DETAIL 10

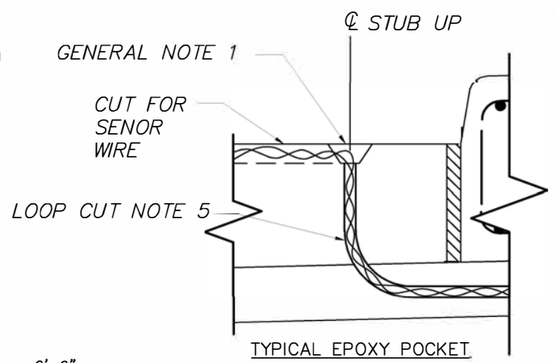

TYPICAL EPOXY POCKET
DETAIL 11

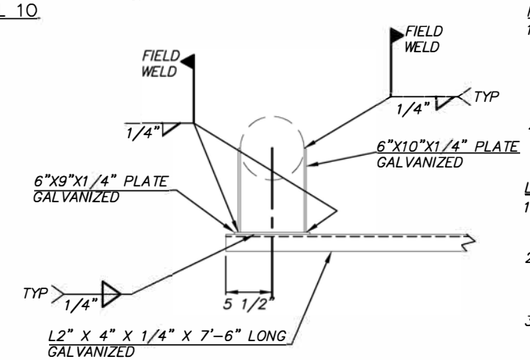

1 VIEW
I126

GENERAL NOTE:

1. THE 39-20-02 CONTRACTOR IS RESPONSIBLE FOR ALL SAW CUTTING, EPOXY POCKET AND CONDUIT IN THE ORT LANES.
2. THE 58-20-01 CONTRACTOR IS RESPONSIBLE FOR ALL SAW CUTTING, EPOXY POCKET AND CONDUIT IN THE TOLL PLAZA LANES.
3. THE 58-20-01 CONTRACTOR SHALL CUT LOOPS AND CREATE EPOXY POCKET BY CHIPPING OUT POCKET TO REMOVE STUB UP RUBBER PLUG. INTEGRATOR SHALL INSTALL SENSOR WIRE BEFORE PLUGGING CONDUIT AND SEALING CUT AND POCKET WITH EPOXY.

PULL BOX NOTES:

1. PULL BOX SHALL HAVE HEAVY DUTY CHECKERED SIDEWALK COVER, GASKETED WITH STAINLESS STEEL HARDWARE, CROUSE HINDS WJBF OR APPROVED EQUAL.
2. SEE PLANS FOR PLACEMENT OF PULL BOX AND ROUTING OF CONDUIT.

LOOP CUT NOTES:

1. MINIMUM SAW DEPTH IS 2", MAX SAW DEPTH IS 2 1/2".
2. LOOP DETECTOR WIRE IN TUBING SHALL BE SPECIFIED IN INTEGRATOR CABLE SCHEDULE.
3. LOOP DETECTOR SEALANT SHALL BE A PREQUALIFIED PRODUCT IN ACCORDANCE WITH SUPPLEMENT 1048. (INTEGRATOR)
4. LENGTH AND WIDTH OF LOOP CUTS SHALL BE AS SPECIFIED IN PLANS.
5. THE INTEGRATOR IS RESPONSIBLE FOR INSTALLING LOOP WIRE, PIEZO WIRE AND EPOXYING THE SAW CUTS.

KEY NOTES:

1. THE ENCLOSURES SHALL BE PROVIDED BY THE INTEGRATOR AND SHALL BE INSTALLED BY THE 58-20-01 CONTRACTOR.
2. THE POLE AND ANCHORE BOLTS SHALL BE PROVIDED BY THE INTEGRATOR AND SHALL BE INSTALLED BY THE 58-20-01 CONTRACTOR.
3. THE ATPM'S AND THE DATIM'S SHALL BY PROVIDED AND INSTALLED BY THE INTEGRATOR.

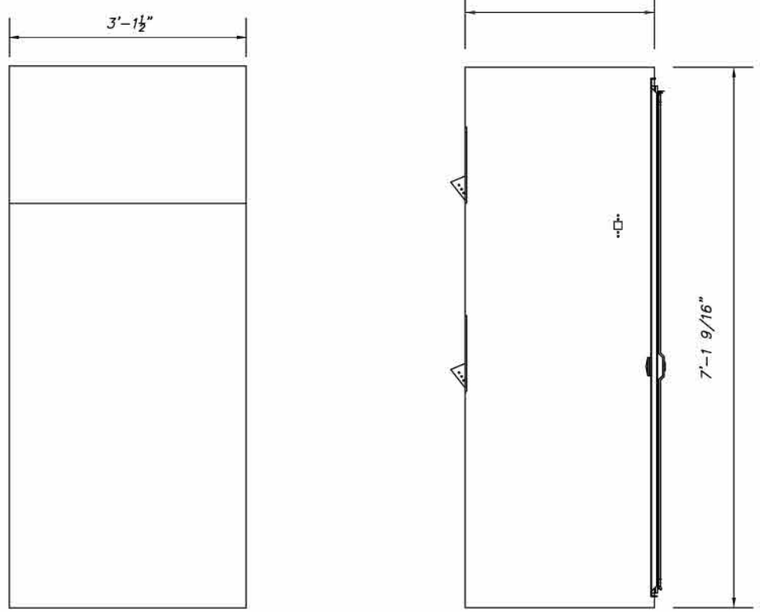

ATPM & DATIM ENCLOSURE DETAIL
DETAIL 12 3

1
I126

* – CONTRACTOR MAY ADJUST AS REQUIRED

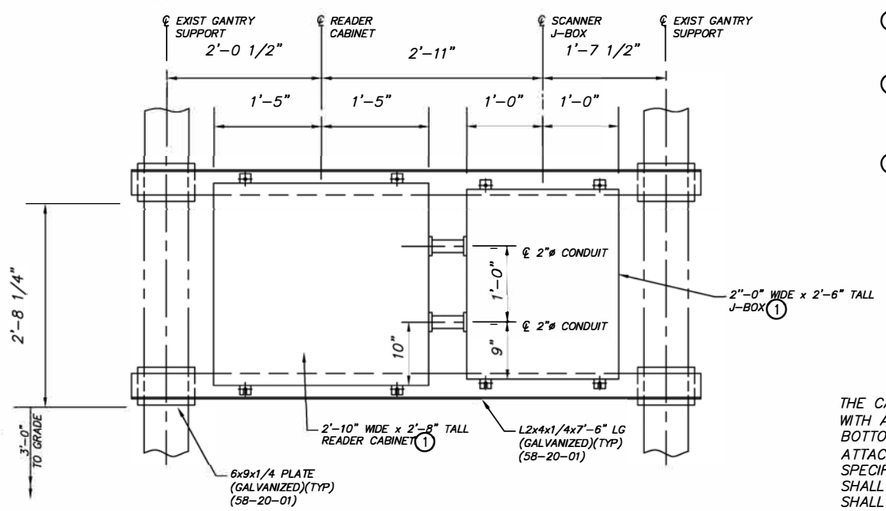

TYPICAL CABINET MOUNT
DETAIL 11

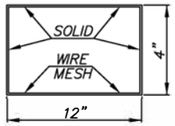

CABLE TRAY

THE CABLE TRAY SHALL BE CONSTRUCTED WITH 0.12 INCH WIRE DIA WITH A POWDER COATED FINISH AND A 2"x2" GRID PATTERN ON THE BOTTOM. THE SIDES AND TOP SHALL BE A SOLID COVERING. ATTACHMENT TO THE 2.5" DIA. HORIZONTAL DIAGONALS SHALL BE AS SPECIFIED BY THE MANUFACTURER. LASHING OF CABLES TO THE TRAY SHALL BE AS SPECIFIED BY THE MANUFACTURER. THE CABLE TRAY SHALL BE MANUFACTURED BY CHALFANT MANUFACTURING CO., 50 PEARL ROAD, SUITE 212, BRUNSWICK, OHIO 44212 TEL: 330-273-3510 OR AN APPROVED EQUAL.

1 ENTIRE SHEET

DESIGN AGENCY
PRIME EV
540 White Pond Drive, Ste. E
Akron, Ohio 44320
(330)-864-7755

NO.	REVISIONS	BY	DATE
1	ADDENDUM No. 2	CK	5/12/20
–	–	–	–

DESIGNED RNS | CHECKED CEK
DRAWN RNS | IN CHARGE CEK

LUCAS COUNTY

TYPICAL DETAILS

TOLL PLAZA 49

PROJECT 58-20-01
DATE: 04/22/2020

I126

202E
202

OHIO TURNPIKE AND INFRASTRUCTURE COMMISSION

NOTES:
1. CONTRACTOR SHALL COIL UP 5'-0" OF CABLE IN GROUND CABINETS FOR TCS TERMINATION.
2. CONTRACTOR SHALL COIL UP 15'-0" OF CABLE IN TOLL BOOTH FOR ROUTING BY TCS CONTRACTOR.
3. ALL WIRE SHALL BE INSTALLED BY THE 58-20-01 CONTRACTOR AND TERMINATED AND TESTED BY THE INTEGRATOR.
4. ANY WIRE THAT IS DAMAGED DURING OR AFTER BEING INSTALLED AND DOES NOT TEST CORRECTLY SHALL BE RE-INSTALLED BY THE 58-20-01 CONTRACTOR AT NO COST TO THE COMMISSION.
5. COIL 5'-0" OF EQUIPMENT CABLE AT EACH EQUIPMENT LOCATIONS, EQUIPMENT ENCLOSURES AND HANDHOLES UNLESS CALLED OUT OTHERWISE.
6. COIL 12'-0" OF EQUIPMENT CABLE AT THE PATRON FAR DISPLAY AND THE VES FRONT CAMERA POLE.
7. PAVEMENT SAWING FOR LOOPS AND PEIZOS IN THE ORT LANES SHALL BE PERFORMED BY THE 58-20-01 CONTRACTOR. THE WIRE FROM CABINET TO PULL BOX SHALL BE INSTALLED BY THE 58-20-01 CONTRACTOR. THE WIRE FOR LOOPS AND PEIZOS SHALL BE INSTALLED AND SEALED BY THE INTEGRATOR. PEIZO- (TYPE 2) CABLE SHALL BE PROVIDE AND INSTALLED ALL THE WAY TO THE CABINET BY THE INTEGRATOR.
8. CAMERA CABLE SHALL BE PROVIDED AND INSTALLED BY 58-20-01 CONTRACTOR.
9. THE 58-20-01 CONTRACTOR SHALL PROVIDE 208V POWER TO EACH TOLL BOTH ELECTRICAL DISTRIBUTION PANEL.
10. DYNAMIC MESSAGE SIGNS SHALL HAVE 208V SUPPLIED BY TOLL BOTH POWER PANEL.

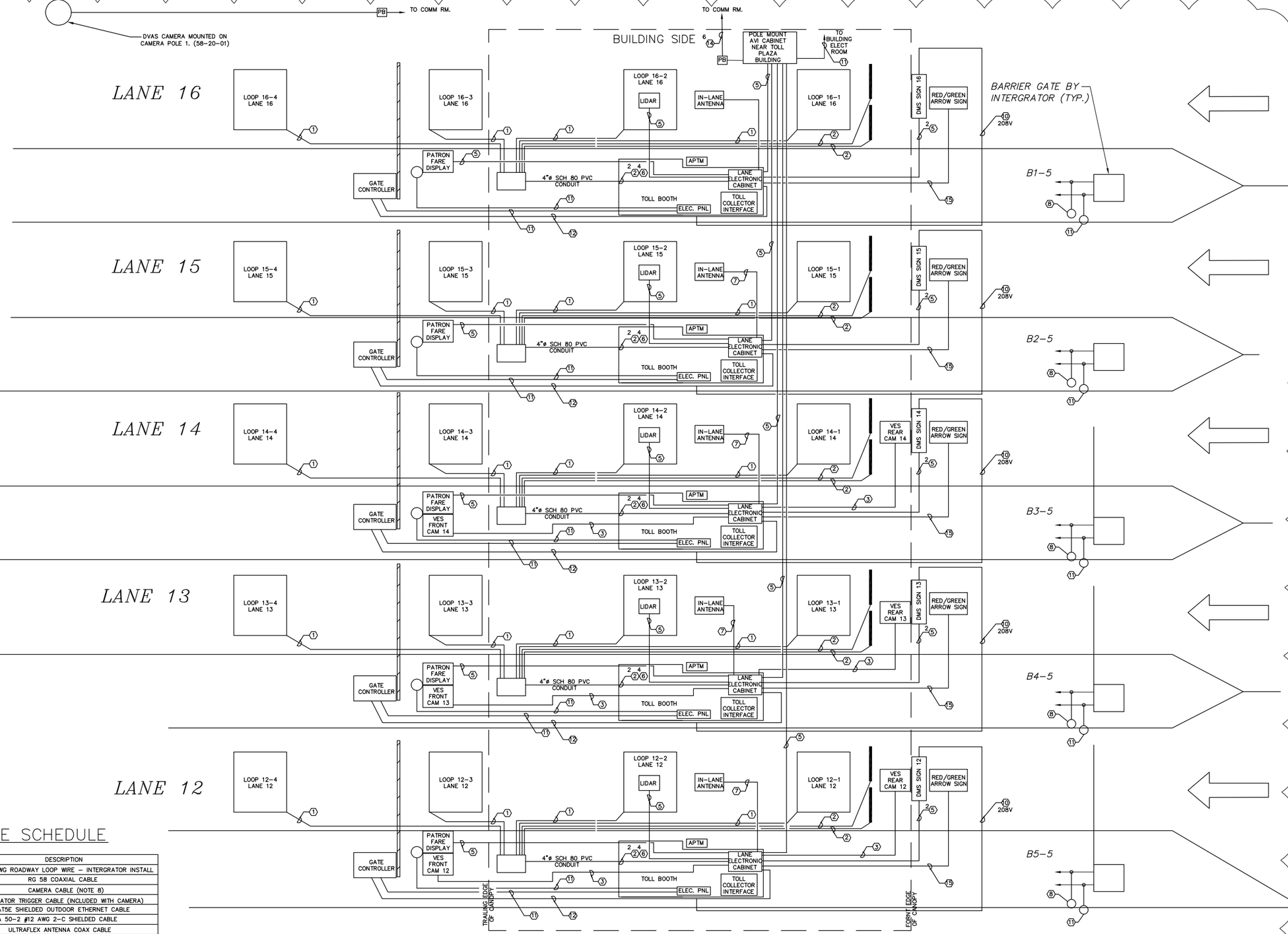

EXIT LANES CABLE SCHEDULE

TYPE	VENDOR	PART NUMBER	DESCRIPTION
1	ANIXTER	6M-1401-03-PR	14 AWG ROADWAY LOOP WIRE - INTERGRATOR INSTALL
2	CONTRACTOR	CONTRACTOR	RG 58 COAXIAL CABLE
3	JAI	10016435	CAMERA CABLE (NOTE 8)
4	JAI	PROPRIETARY	ILLUMINATOR TRIGGER CABLE (INCLUDED WITH CAMERA)
5	BELDEN	7919A	CAT5E SHIELDED OUTDOOR ETHERNET CABLE
6	**		IMSA 50-2 #12 AWG 2-C SHIELDED CABLE
7	TIMES MICROWAVE	LMR-600	ULTRAFLEX ANTENNA COAX CABLE
8	BELDEN	A11802R	18 AWG, 2-C CABINET DOOR SWITCH CABLE- NOT USED
9	BELDEN	A11803	18 AWG, 3-C UPS RELAY CABLE- NOT USED
10	**		6AWG 4C POWER & GRD
11	**		12 AWG 3C POWER & GRD
12	**		18 AWG SIGNAL WIRE
13	**		8 AWG 3C POWER & GRD - NOT USED
14	**		12 FIBER OPTIC MULTIMODE - NOT USED
15	**		12 AWG 4C POWER & GRD
16			

** FURNISH AND INSTALLED BY 58-20-01 CONTRACTOR

1 ENTIRE SHEET

DESIGN AGENCY
PRIME AE
540 White Pond Drive, Ste. E
Akron, Ohio 44320
(330)864-7755

REVISIONS			
NO.		BY	DATE
1	ADDENDUM No. 2	CK	5/12/20
-	-	-	-

DESIGNED	CHECKED
RNS	CEK
DRAWN	IN CHARGE
RNS	CEK

EXIT LANE CABLE SCHEDULE

LUCAS COUNTY

TOLL PLAZA 49

PROJECT 58-20-01

DATE: 04/22/2020

I127

202F
202

OHIO TURNPIKE AND INFRASTRUCTURE COMMISSION

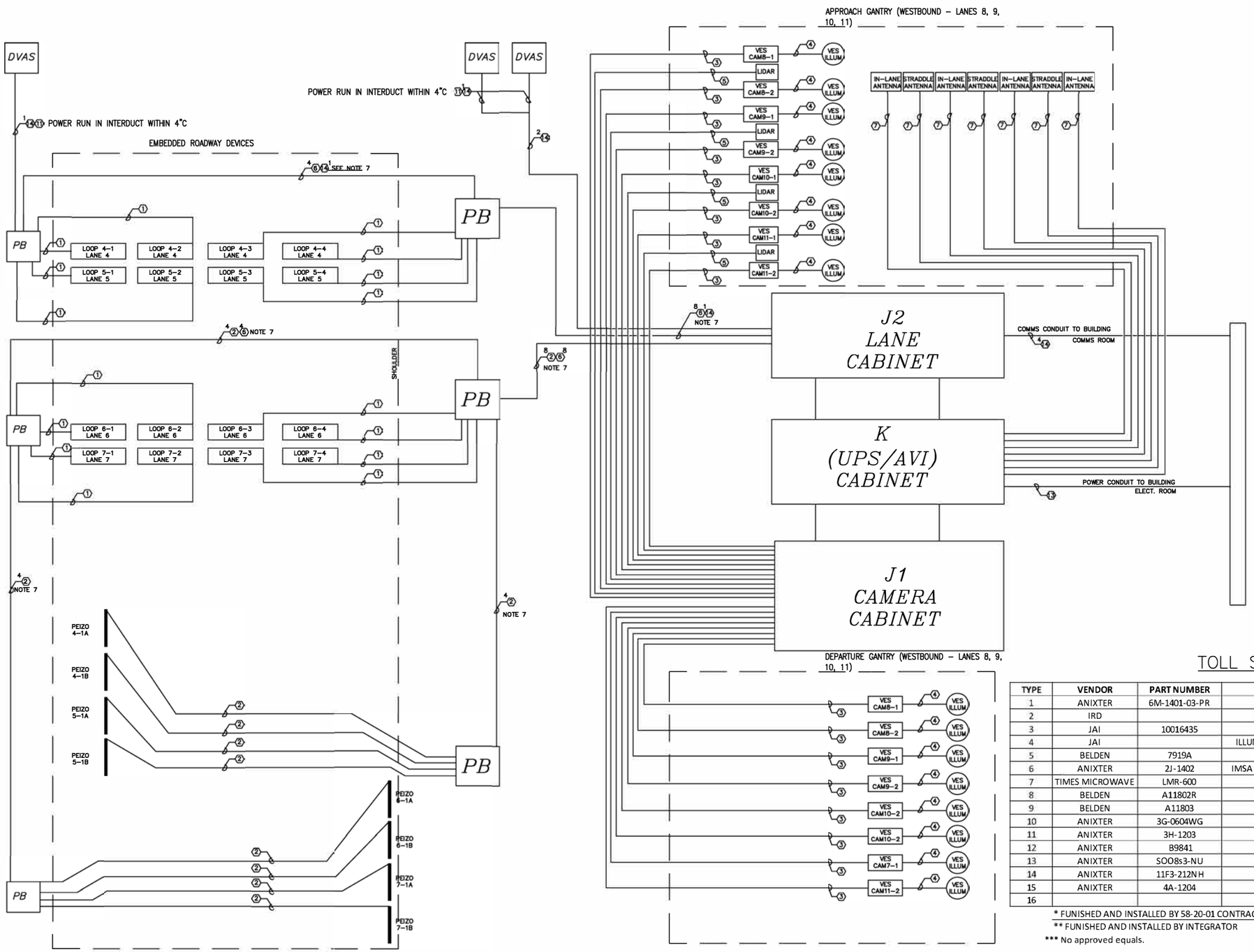

NOTES;

1. COIL UP 5'-0" OF EQUIPMENT CABLE AT EACH EQUIPMENT LOCATIONS, EQUIPMENT ENCLOSURES, AND HAND HOLES UNLESS CALLED OUT OTHERWISE.
2. ALL WIRE SHALL BE INSTALLED BY THE 58-20-01 CONTRACTOR AND TERMINATED AND TESTED BY THE INTEGRATOR.
3. ANY WIRE THAT IS DAMAGED DURING OR AFTER BEING INSTALLED AND DOES NOT TEST CORRECTLY SHALL BE RE-INSTALLED BY THE 58-20-01 CONTRACTOR AT NO COST TO THE COMMISSION.
4. PAVEMENT SAWING FOR LOOPS AND PIEZO SENSORS IN THE ORT LANES SHALL BE PREFORMED BY THE 39-20-02 CONTRACTOR. THE WIRE SHALL BE INSTALLED BY THE 58-20-01 CONTRACTOR AND THE LOOPS AND PIEZO SENSORS SHALL BE INSTALLED AND SEALED BY THE INTEGRATOR.
5. CABINETS J1, J2, AND K SHALL BE PROVIDED BY INTEGRATOR AND INSTALLED BY 58-20-01 CONTRACTOR.
6. THE 58-20-01 CONTRACTOR SHALL COORDINATE WITH THE INTEGRATOR THE EQUIPMENT ORGANIZATION AND THE WIRE REQUIREMENTS IN THE J1, J2, AND K CABINETS. COIL 15'-0" OF EQUIPMENT WIRE IN THE J1, J2, AND K CABINETS.
7. THE RG 58 COAXIAL CABLE IS INTEGRATED (CONNECTED AS ONEB UNIT) WITH THE PEIZO STRIP. THE PIEZO CABLE WILL BE FURNISHED AND INSTALLED BY THE INTEGRATOR.
8. CAMERA CABLE SHALL BE PROVIDED BY INTEGRATOR AND INSTALLED BY 58-20-01 CONTRACTOR.
9. THE DVAS CAMERA WILL BE ATTACHED TO A 15' POLE MOUNTED ON THE MAINLINE BARRIER WALLS. FIBER IS TO BE ROUTED THROUGH THE J2 ENCLOSURE TO THE COMM. ROOM.

TOLL SITE CABLE SCHEDULE

TYPE	VENDOR	PART NUMBER	DESCRIPTION
1	ANIXTER	6M-1401-03-PR	14 AWG ROADWAY LOOP WIRE **
2	IRD		RG 58 COAXIAL CABLE (INCLUDED WITH PIEZO STRIP) **
3	JAI	10016435	VES CAMERA CABLE * / ***
4	JAI		ILLUMINATOR TRIGGER CABLE (INCLUDED WITH VES CAMERA) **
5	BELDEN	7919A	CAT 5e SHIELDED OUTDOOR ETHERNET CABLE *
6	ANIXTER	2J-1402	IMSA 50-2 #12 AWG, 2-C, SHIELDED CABLE (LOOP LEAD-IN CABLE) *
7	TIMES MICROWAVE	LMR-600	ULTRAFLEX ANTENNA COAX CABLE *
8	BELDEN	A11802R	18 AWG, 2-C, CABINET DOOR SWITCH CABLE *
9	BELDEN	A11803	18 AWG, 3-C, UPS RELAY CABLE *
10	ANIXTER	3G-0604WG	6 AWG, 4-C, POWER & GND - NOT USED*
11	ANIXTER	3H-1203	12 AWG, 3-C, POWER & GND *
12	ANIXTER	B9841	18 AWG, SIGNAL WIRE- NOT USED *
13	ANIXTER	SOO8s3-NU	8 AWG, 3-C, POWER & GND *
14	ANIXTER	11F3-212NH	12 FIBER OPTIC MULTMODE *
15	ANIXTER	4A-1204	12 AWG, 4-C, POWER & GND - NOT USED *
16			

* FUNISHED AND INSTALLED BY 58-20-01 CONTRACTOR
** FUNISHED AND INSTALLED BY INTEGRATOR
*** No approved equals.

1 ENTIRE SHEET

DESIGN AGENCY
PRIME AE
540 White Pond Drive, Ste. E
Akron, Ohio 44320
(330)-864-7755

NO.	REVISIONS	BY	DATE
1	ADDENDUM No. 2	CK	5/12/20

DESIGNED RNS | CHECKED CEK
DRAWN RNS | IN CHARGE CEK

WESTBOUND ORT CABLE SCHEDULE
LUCAS COUNTY
TOLL PLAZA 49

PROJECT 58-20-01
DATE: 04/22/2020

I128

202G
202

OHIO TURNPIKE AND INFRASTRUCTURE COMMISSION

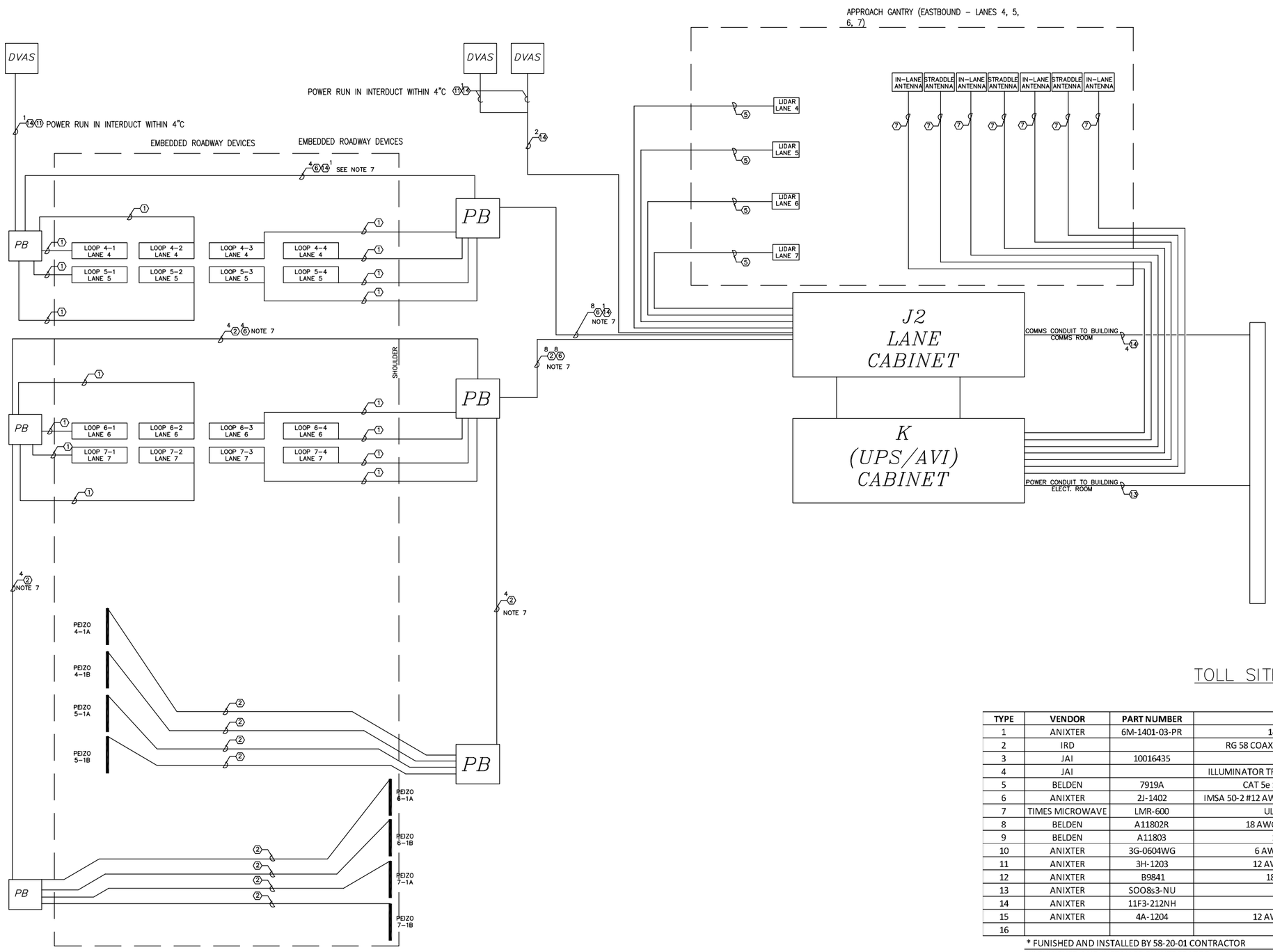

NOTES:

1. COIL UP 5'-0" OF EQUIPMENT CABLE AT EACH EQUIPMENT LOCATIONS, EQUIPMENT ENCLOSURES, AND HAND HOLES UNLESS CALLED OUT OTHERWISE.
2. ALL WIRE SHALL BE INSTALLED BY THE 58-20-01 CONTRACTOR AND TERMINATED AND TESTED BY THE INTEGRATOR.
3. ANY WIRE THAT IS DAMAGED DURING OR AFTER BEING INSTALLED AND DOES NOT TEST CORRECTLY SHALL BE RE-INSTALLED BY THE 58-20-01 CONTRACTOR AT NO COST TO THE COMMISSION.
4. PAVEMENT SAWING FOR LOOPS AND PIEZO SENSORS IN THE ORT LANES SHALL BE PREFORMED BY THE 39-20-02 CONTRACTOR. THE WIRE SHALL BE INSTALLED BY THE 58-20-01 CONTRACTOR AND THE LOOPS AND PIEZO SENSORS SHALL BE INSTALLED AND SEALED BY THE INTEGRATOR.
5. CABINETS J2 AND K SHALL BE PROVIDED BY INTEGRATOR AND INSTALLED BY 58-20-01 CONTRACTOR.
6. THE 58-20-01 CONTRACTOR SHALL COORDINATE WITH THE INTEGRATOR THE EQUIPMENT ORGANIZATION AND THE WIRE REQUIREMENTS IN THE J2 AND K CABINETS. COIL 15'-0" OF EQUIPMENT WIRE IN THE J2 AND K CABINETS.
7. THE RG 58 COAXIAL CABLE IS INTERGRATED (CONNECTED AS ONE UNIT) WITH THE PEIZO STRIP. THE PIEZO CABLE WILL BE FURNISHED AND INSTALLED BY THE INTEGRATOR.
8. CAMERA CABLE SHALL BE PROVIDED BY INTEGRATOR AND INSTALLED BY 58-20-01 CONTRACTOR.
9. THE DVAS CAMERA WILL BE ATTACHED TO A 15' POLE MOUNTED ON THE MAINLINE BARRIER WALLS. FIBER IS TO BE ROUTED THROUGH THE J2 ENCLOSURE TO THE COMM. ROOM.

TOLL SITE CABLE SCHEDULE

TYPE	VENDOR	PART NUMBER	DESCRIPTION
1	ANIXTER	6M-1401-03-PR	14 AWG ROADWAY LOOP WIRE **
2	IRD		RG 58 COAXIAL CABLE (INCLUDED WITH PIEZO STRIP) **
3	JAI	10016435	VES CAMERA CABLE * / ***
4	JAI		ILLUMINATOR TRIGGER CABLE (INCLUDED WITH VES CAMERA) **
5	BELDEN	7919A	CAT 5e SHIELDED OUTDOOR ETHERNET CABLE *
6	ANIXTER	2J-1402	IMSA 50-2 #12 AWG, 2-C, SHIELDED CABLE (LOOP LEAD-IN CABLE) *
7	TIMES MICROWAVE	LMR-600	ULTRAFLEX ANTENNA COAX CABLE *
8	BELDEN	A11802R	18 AWG, 2-C, CABINET DOOR SWITCH CABLE *
9	BELDEN	A11803	18 AWG, 3-C, UPS RELAY CABLE *
10	ANIXTER	3G-0604WG	6 AWG, 4-C, POWER & GND - NOT USED *
11	ANIXTER	3H-1203	12 AWG, 3-C, POWER & GND - NOT USED *
12	ANIXTER	B9841	18 AWG, SIGNAL WIRE- NOT USED *
13	ANIXTER	SOO8s3-NU	8 AWG, 3-C, POWER & GND *
14	ANIXTER	11F3-212NH	12 FIBER OPTIC MULTIMODE *
15	ANIXTER	4A-1204	12 AWG, 4-C, POWER & GND - NOT USED *
16			

* FUNISHED AND INSTALLED BY 58-20-01 CONTRACTOR
** FUNISHED AND INSTALLED BY INTEGRATOR
*** No approved equals.

1 ENTIRE SHEET

DESIGN AGENCY
PRIME AE
540 White Pond Drive, Ste. E
Akron, Ohio 44320
(330)864-7755

NO.	REVISIONS	BY	DATE
1	ADDENDUM No. 2	CK	5/12/20

DESIGNED RNS | CHECKED CEK
DRAWN RNS | IN CHARGE CEK

EASTBOUND ORT CABLE SCHEDULE
TOLL PLAZA 49
LUCAS COUNTY

PROJECT 58-20-01
DATE: 04/22/2020

I129

202H
202

OHIO TURNPIKE AND INFRASTRUCTURE COMMISSION

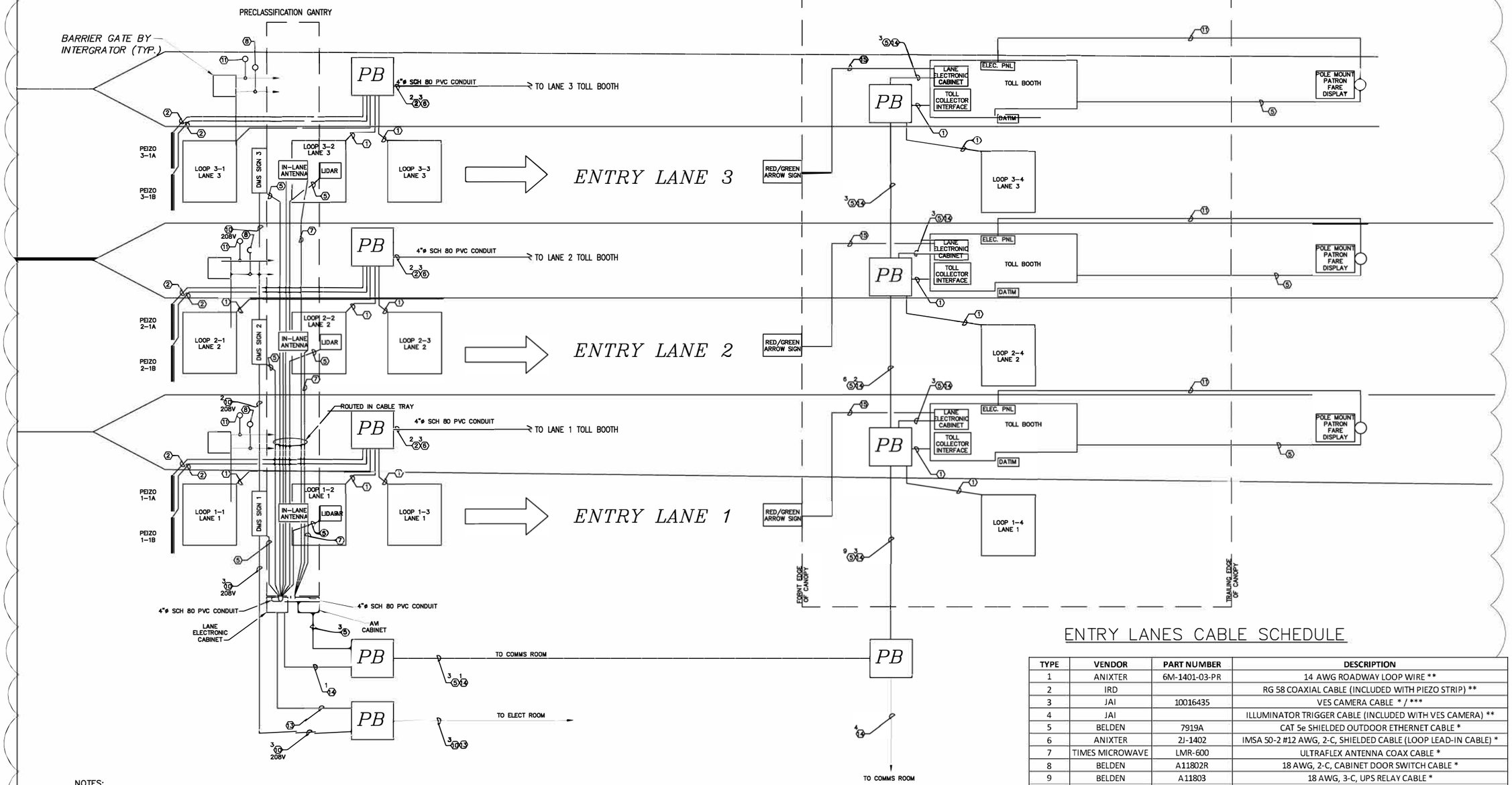

NOTES:

1. CONTRACTOR SHALL COIL UP 5'–0" OF CABLE IN GROUND CABINETS FOR TCS TERMINATION.
2. CONTRACTOR SHALL COIL UP 15'–0" OF CABLE IN TOLL BOOTH FOR ROUTING BY TCS CONTRACTOR.
3. ALL WIRE SHALL BE INSTALLED BY THE 58–20–01 CONTRACTOR AND TERMINATED AND TESTED BY THE INTEGRATOR.
4. ANY WIRE THAT IS DAMAGED DURING OR AFTER BEING INSTALLED AND DOES NOT TEST CORRECTLY SHALL BE RE–INSTALLED BY THE 58–20–01 CONTRACTOR AT NO COST TO THE COMMISSION.
5. COIL 5'–0" OF EQUIPMENT CABLE AT EACH EQUIPMENT LOCATIONS, EQUIPMENT ENCLOSURES AND HANDHOLES UNLESS CALLED OUT OTHERWISE.
6. COIL 12'–0" OF EQUIPMENT CABLE AT THE PATRON FAR DISPLAY AND THE VES FRONT CAMERA POLE.
7. PAVEMENT SAWING FOR LOOPS AND PEIZOS IN THE ORT LANES SHALL BE PERFORMED BY THE 58–20–01 CONTRACTOR. THE WIRE SHALL BE INSTALLED BY THE 58–20–01 CONTRACTOR AND THE LOOPS AND PEIZOS SHALL BE FURNISHED AND INSTALLED AND SEALED BY THE INTEGRATOR.
8. CAMERA CABLE SHALL BE PROVIDED BY INTEGRATOR AND INSTALLED BY 58–20–01 CONTRACTOR.

CAMERA CABLE SHALL BE PROVIDED BY INTEGRATOR AND INSTALLED BY 58–20–01 CONTRACTOR.

ENTRY LANES CABLE SCHEDULE

TYPE	VENDOR	PART NUMBER	DESCRIPTION
1	ANIXTER	6M-1401-03-PR	14 AWG ROADWAY LOOP WIRE **
2	IRD		RG 58 COAXIAL CABLE (INCLUDED WITH PIEZO STRIP) **
3	JAI	10016435	VES CAMERA CABLE * / ***
4	JAI		ILLUMINATOR TRIGGER CABLE (INCLUDED WITH VES CAMERA) **
5	BELDEN	7919A	CAT 5e SHIELDED OUTDOOR ETHERNET CABLE *
6	ANIXTER	2J-1402	IMSA 50-2 #12 AWG, 2-C, SHIELDED CABLE (LOOP LEAD-IN CABLE) *
7	TIMES MICROWAVE	LMR-600	ULTRAFLEX ANTENNA COAX CABLE *
8	BELDEN	A11802R	18 AWG, 2-C, CABINET DOOR SWITCH CABLE *
9	BELDEN	A11803	18 AWG, 3-C, UPS RELAY CABLE *
10	ANIXTER	3G-0604WG	6 AWG, 4-C, POWER & GND - NOT USED*
11	ANIXTER	3H-1203	12 AWG, 3-C, POWER & GND *
12	ANIXTER	B9841	18 AWG, SIGNAL WIRE- NOT USED *
13	ANIXTER	SOO8s3-NU	8 AWG, 3-C, POWER & GND *
14	ANIXTER	11F3-212NH	12 FIBER OPTIC MULTMODE *
15	ANIXTER	4A-1204	12 AWG, 4-C, POWER & GND - NOT USED *
16			

* FUNISHED AND INSTALLED BY 58-20-01 CONTRACTOR
** FUNISHED AND INSTALLED BY INTEGRATOR
*** No approved equals.

1 ENTIRE SHEET

DESIGN AGENCY
PRIME AE
540 White Pond Drive, Ste. E
Akron, Ohio 44320
(330)-864-7755

NO.	REVISIONS	BY	DATE
1	ADDENDUM No. 2	CK	5/12/20

DESIGNED RNS | CHECKED CEK
DRAWN RNS | IN CHARGE CEK

ENTRY LANE CABLE SCHEDULE
TOLL PLAZA 49
LUCAS COUNTY

PROJECT 58-20-01
DATE: 04/22/2020

I130

2021
202

OHIO TURNPIKE AND INFRASTRUCTURE COMMISSION

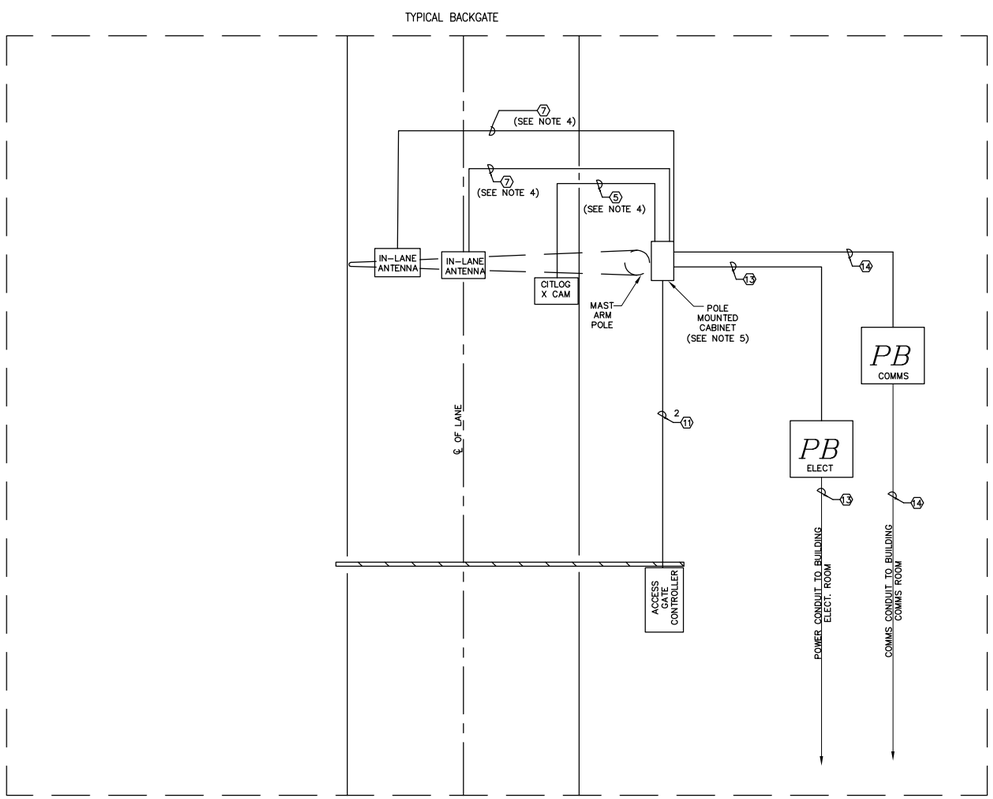

NOTES:

1. COIL UP 5'-0" OF EQUIPMENT CABLE AT EACH EQUIPMENT LOCATIONS, EQUIPMENT ENCLOSURES, AND HAND HOLES UNLESS CALLED OUT OTHERWISE.
2. ALL WIRE SHALL BE INSTALLED BY THE 58-20-01 CONTRACTOR AND TERMINATED AND TESTED BY THE INTEGRATOR.
3. ANY WIRE THAT IS DAMAGED DURING OR AFTER BEING INSTALLED AND DOES NOT TEST CORRECTLY SHALL BE RE-INSTALLED BY THE 58-20-01 CONTRACTOR AT NO COST TO THE COMMISSION.
4. 58-20-01 CONTRACTOR SHALL ROUTE AVI AND CITILOG XCAM CABLES THOUGH POLE AND MAST ARM TO EQUIPMENT. INSTALL RUBBER GROMMET TO PROTECT WIRE AT EXIT POINT.
5. 58-20-01 CONTRACTOR SHALL MOUNT CABINET ON POLE USING STAINLESS STEEL STRAPS. INSTALL NIPPLE BETWEEN CABINET AND POLE FOR CABLE ENTRY. CABINET SHALL BE SUPPLIED BY INTEGRATOR AND INSTALL BY 58-20-01 CONTRACTOR.
6. 58-20-01 CONTRACTOR SHALL INSTALL ALL ACCESS GATES, CONDUIT, WIRE AND POLE INFRASTRUCTURE. INTEGRATOR SHALL INSTALL TCS EQUIPMENT, TEST, AND TERMINATE.
7. CAMERA CABLE SHALL BE PROVIDED BY INTEGRATOR AND INSTALLED BY 58-20-01 CONTRACTOR.

TOLL SITE CABLE SCHEDULE

TYPE	VENDOR	PART NUMBER	DESCRIPTION
1	ANIXTER	6M-1401-03-PR	14 AWG ROADWAY LOOP WIRE **
2	IRD		RG 58 COAXIAL CABLE (INCLUDED WITH PIEZO STRIP) **
3	JAI	10016435	VES CAMERA CABLE * / ***
4	JAI		ILLUMINATOR TRIGGER CABLE (INCLUDED WITH VES CAMERA) **
5	BELDEN	7919A	CAT 5e SHIELDED OUTDOOR ETHERNET CABLE *
6	ANIXTER	2J-1402	IMSA 50-2 #12 AWG, 2-C, SHIELDED CABLE (LOOP LEAD-IN CABLE) *
7	TIMES MICROWAVE	LMR-600	ULTRAFLEX ANTENNA COAX CABLE *
8	BELDEN	A11802R	18 AWG, 2-C, CABINET DOOR SWITCH CABLE *
9	BELDEN	A11803	18 AWG, 3-C, UPS RELAY CABLE *
10	ANIXTER	3G-0604WG	6 AWG, 4-C, POWER & GND - NOT USED*
11	ANIXTER	3H-1203	12 AWG, 3-C, POWER & GND *
12	ANIXTER	B9841	18 AWG, SIGNAL WIRE- NOT USED *
13	ANIXTER	SOO8s3-NU	8 AWG, 3-C, POWER & GND *
14	ANIXTER	11F3-212NH	12 FIBER OPTIC MULTMODE *
15	ANIXTER	4A-1204	12 AWG, 4-C, POWER & GND - NOT USED *
16			

* FUNISHED AND INSTALLED BY 58-20-01 CONTRACTOR
** FUNISHED AND INSTALLED BY INTEGRATOR
*** No approved equals.

1 ENTIRE SHEET

DESIGN AGENCY
PRIME AE
540 White Pond Drive, Ste. E
Akron, Ohio 44320
(330)-864-7755

NO.	REVISIONS	BY	DATE
1	ADDENDUM No. 2	CK	5/12/20
-	-	-	-

DESIGNED RNS
CHECKED CEK
DRAWN RNS
IN CHARGE CEK

SCHEDULE
LUCAS COUNTY

TYPICAL BACK GATE CABLE SCHEDULE
TOLL PLAZA 49

PROJECT 58-20-01
DATE: 04/22/2020

I131

202J
202

OHIO TURNPIKE AND INFRASTRUCTURE COMMISSION

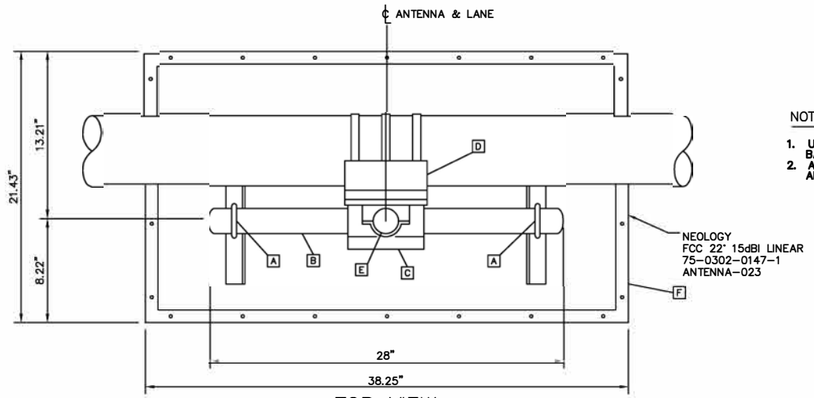

TOP VIEW.

NOTE:

1. USE PELCO BRACKET WITH 42" SS BAND FOR MOUNTING TO 4"ø GALV. PIPE.
2. ALL MOUNTING BRACKS AND HARDWARE SHALL BE PROVIDED BY THE INTERGRATOR AND INSTALLED BY THE 58-20-01 CONTRACTOR.

POS.	DESCRIPTION
A	U-BOLT ,PIPE CLAMP & NUTS (SUPPLY W/ ANTENNA)
B	2" HORIZ. MOUNTING TUBE ASTM B241 6061-T6 ALUMINUM
C	PELCO PART No. SP-5730
D	ASTRO BRACKET AB-3039 W/42" BAND 6061-T6 ALUMINUM
E	VERT. MOUNTING TUBE ASTM B241 6061-T6 ALUMINUM
F	NEOLOGY FCC 22' 15dBI LINEAR 75-0302-0147-1 ANTENNA-023
G	
H	
K	
L	
M	
N	
P	
Q	
R	
S	

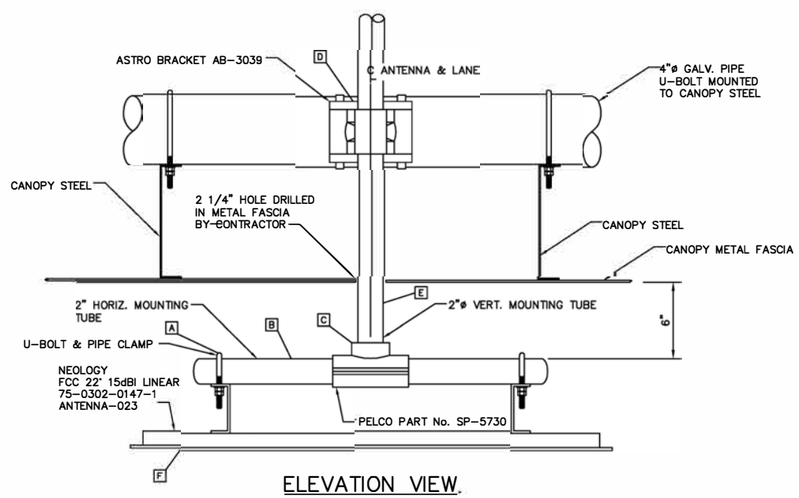

ELEVATION VIEW.

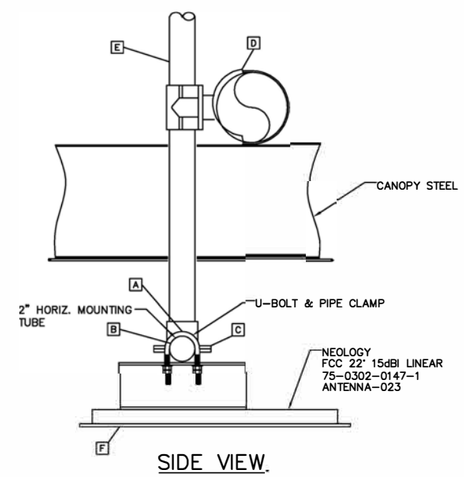

SIDE VIEW.

AVI ANTENNA MOUNTING DETAILS
(PLAZA CANOPY)

△1 ENTIRE SHEET

DESIGN AGENCY
PRIME AE
540 White Pond Drive, Ste. E
Akron, Ohio 44320
(330)-864-7755

NO.	REVISIONS	BY	DATE
1	ADDENDUM No. 2	CK	5/12/20

DESIGNED RNS | CHECKED CEK
DRAWN RNS | IN CHARGE CEK

AVI ANTENNA MOUNTING CANOPY DETAIL

TOLL PLAZA 49 — LUCAS COUNTY

PROJECT 58-20-01
DATE: 04/22/2020

OHIO TURNPIKE AND INFRASTRUCTURE COMMISSION

I132

202K / 202

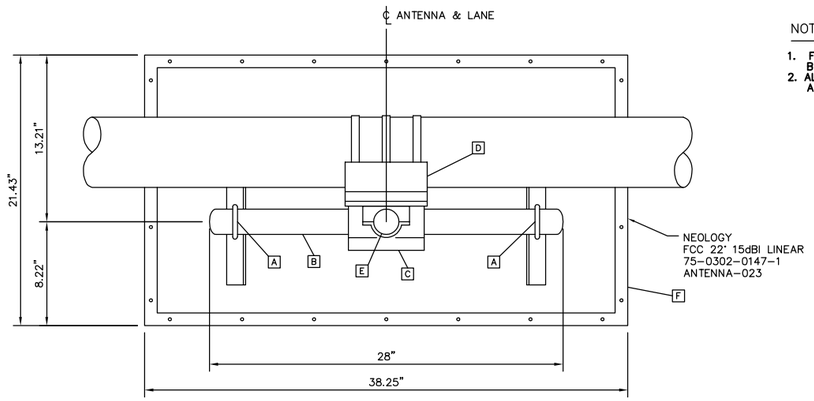

TOP VIEW

NOTE:

1. FOR TOLL GANTRY TOLL SITES USE PELCO BRACKET WITH 42" BAND FOR MOUNTING TO MAST ARM.
2. ALL MOUNTING BRACKS AND HARDWARE SHALL BE PROVIDED BY THE INTERGRATOR AND INSTALLED BY THE 58-20-01 CONTRACTOR.

POS.	DESCRIPTION
A	U-BOLT ,PIPE CLAMP & NUTS (SUPPLY W/ ANTENNA)
B	2" HORIZ. MOUNTING TUBE ASTM B241 6061-T6 ALUMINUM
C	PELCO PART No. SP-5730
D	ASTRO BRACKET AB-3039 W/42" BAND 6061-T6 ALUMINUM
E	VERT. MOUNTING TUBE ASTM B241 6061-T6 ALUMINUM
F	NEOLOGY FCC 22' 15dBI LINEAR 75-0302-0147-1 ANTENNA-023
G	SAFETY CABLE SC-18B
H	
K	
L	
M	
N	
P	
Q	
R	
S	

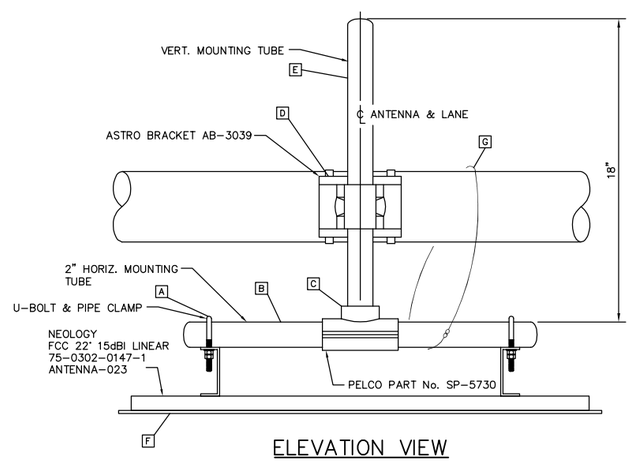

ELEVATION VIEW

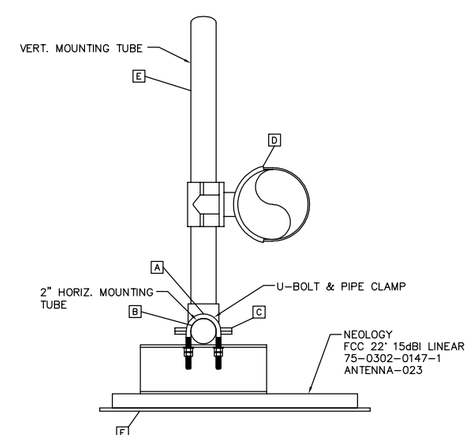

SIDE VIEW

AVI ANTENNA MOUNTING DETAILS
(GANTRY)

1 ENTIRE SHEET

DESIGN AGENCY
PRIME EV
540 White Pond Drive, Ste. E
Akron, Ohio 44320
(330)-864-7755

NO.	REVISIONS	BY	DATE
1	ADDENDUM No. 2	CK	5/12/20

DESIGNED	CHECKED
RNS	CEK
DRAWN	IN CHARGE
RNS	CEK

AVI ANTENNA MOUNTING GANTRY DETAIL

LUCAS COUNTY

TOLL PLAZA 49

PROJECT 58-20-01

DATE: 04/22/2020

OHIO TURNPIKE AND INFRASTRUCTURE COMMISSION

I133

202L
202

NOTE:

1. ALL MOUNTING BRACKS AND HARDWARE SHALL BE PROVIDED BY THE INTERGRATOR AND INSTALLED BY THE 58-20-01 CONTRACTOR.

POS.	DESCRIPTION
A	GV-MOUNT 104
B	GEOVISION GV-SD3732-IR DVAS CAMERA
C	SELF TAPPING 3/8" SHEET METAL SCREWS W/ SEALING WASHERS
D	
E	
F	
G	
H	
K	
L	
M	
N	
P	
Q	
R	
S	
T	

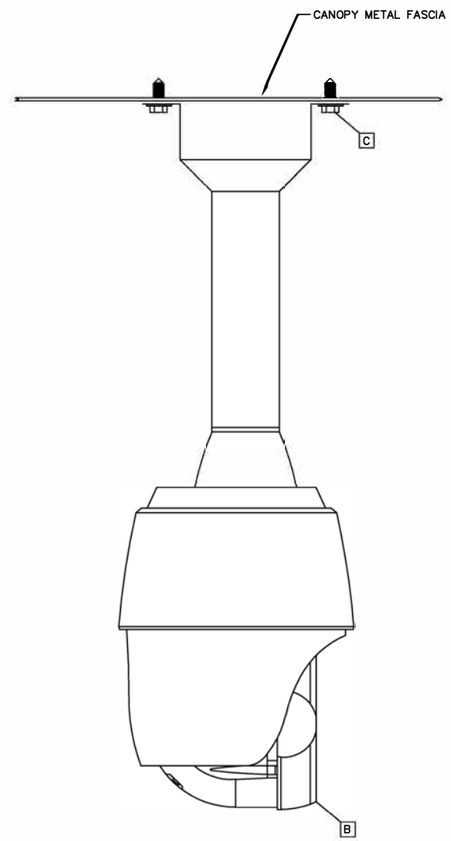

SIDE VIEW

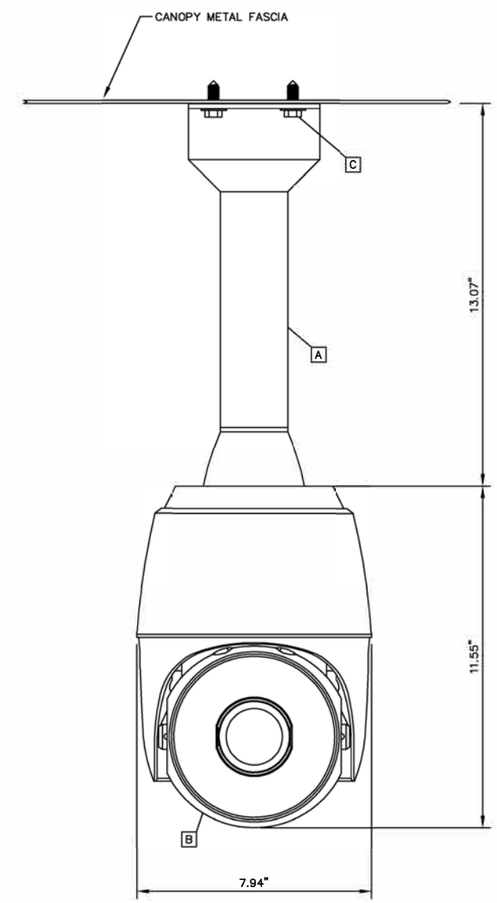

FRONT VIEW

DVAS CAMERA MOUNTING DETAILS
(PLAZA CANOPY)

1 ENTIRE SHEET

DESIGN AGENCY
PRIME EV
540 White Pond Drive, Ste. E
Akron, Ohio 44320
(330)-864-7755

NO.	REVISIONS	BY	DATE
1	ADDENDUM No. 2	CK	5/12/20

DESIGNED RNS | CHECKED CEK | IN CHARGE CEK
DRAWN RNS

DVAS CAMERA MOUNTING CANOPY DETAIL
TOLL PLAZA 49 LUCAS COUNTY

PROJECT 58-20-01
DATE: 04/22/2020

1134

202M / 202

OHIO TURNPIKE AND INFRASTRUCTURE COMMISSION

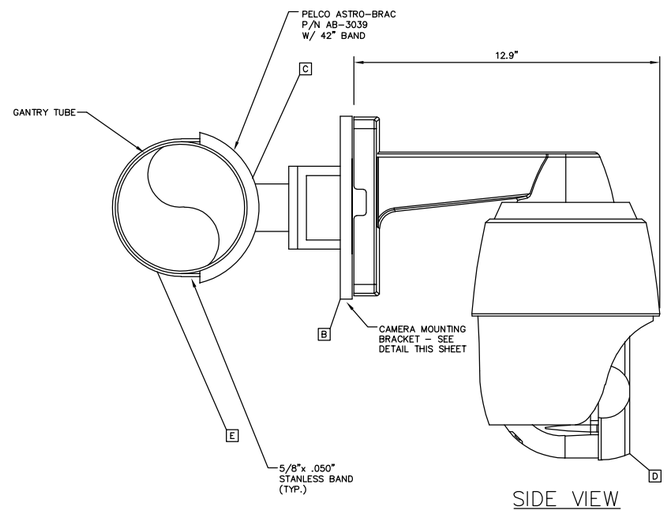

SIDE VIEW

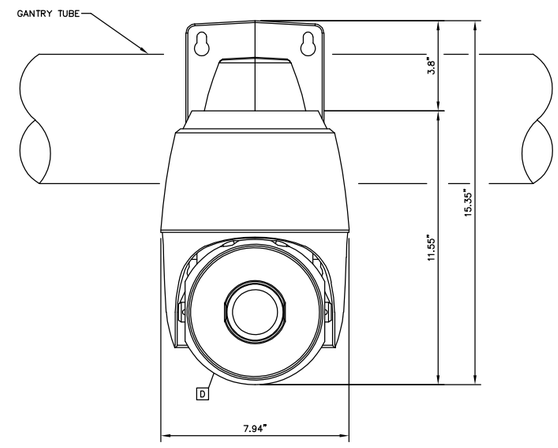

FRONT VIEW

POS.	DESCRIPTION
A	BOLTS, PHILLIPS COUNTERSUNK 3/8"X16X1.25" ASTM F879 SS
B	CAMERA MOUNTING PLATE SERIES 3 6061-T6511 ALUMINUM
C	PELCO ASTRO-BRAC P/N AB-3039 W/84" BAND 6061-T6511 ALUMINUM
D	GEOVISION GV-SD3732-IR DVAS CAMERA
E	5/8"x .050" STANLESS BAND 6061-T6511 ALUMINUM
F	
G	
H	
K	
L	
M	
N	
P	
Q	
R	
S	
T	

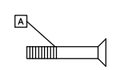

DETAIL "A"

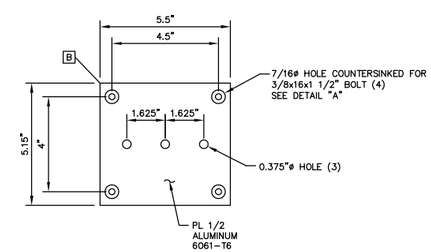

CAMERA MOUNTING PLATE

DVAS CAMERA MOUNTING DETAILS
(GANTRY)

1 ENTIRE SHEET

DESIGN AGENCY
PRIME EV
540 White Pond Drive, Ste. E
Akron, Ohio 44320
(330)-864-7755

NO.	REVISIONS	BY	DATE
1	ADDENDUM No. 2	CK	5/12/20

DESIGNED	CHECKED
RNS	CEK
DRAWN	IN CHARGE
RNS	CEK

DVAS CAMERA MOUNTING GANTRY DETAIL

TOLL PLAZA 49 LUCAS COUNTY

PROJECT 58-20-01
DATE: 04/22/2020

OHIO TURNPIKE AND INFRASTRUCTURE COMMISSION

I135

202N
202

NOTE:

1. ALL MOUNTING BRACKS AND HARDWARE SHALL BE PROVIDED BY THE INTERGRATOR AND INSTALLED BY THE 58-20-01 CONTRACTOR.

POS.	DESCRIPTION
A	SELF TAPPING 3/8" SHEET METAL SCREWS W/ SEALING WASHERS
B	SICK LMS511 P/N 1046135
C	SICK WEATHER HOOD P/N 2063050
D	SICK MTG BRACKET P/N 2059271

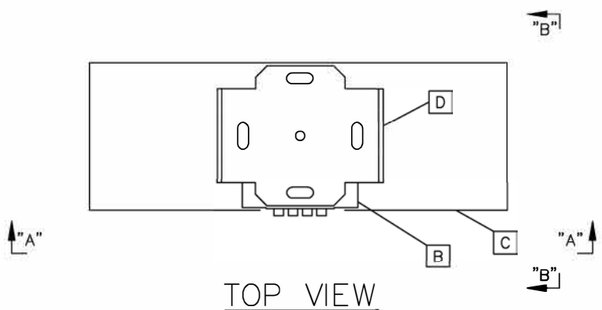

TOP VIEW

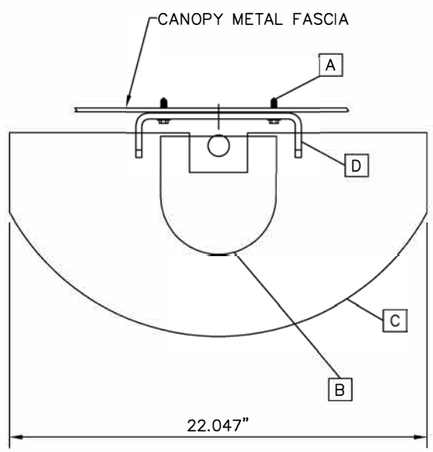

VIEW "A"

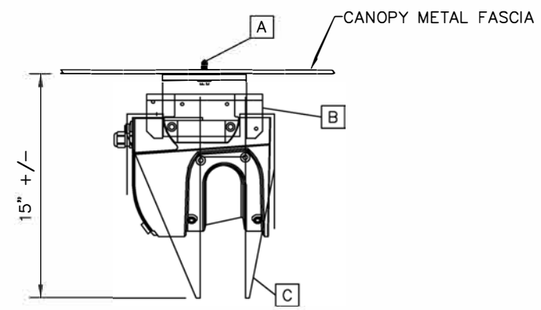

DIRECTION OF TRAFFIC

VIEW "B"

TOP OF BRACKET 2059271 FOR REFERENCE ONLY

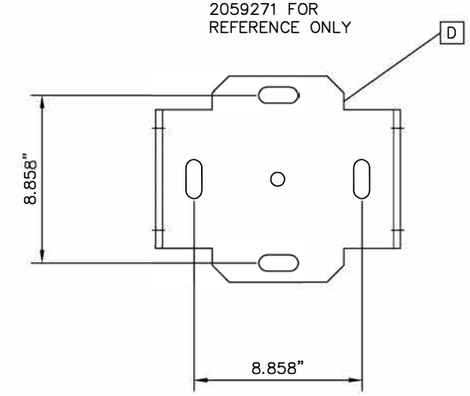

LIDAR MOUNTING DETAILS
(PLAZA CANOPY)

△1 ENTIRE SHEET

DESIGN AGENCY
PRIME EV
540 White Pond Drive, Ste. E
Akron, Ohio 44320
(330)-864-7755

NO.	REVISIONS	BY	DATE
1	ADDENDUM No. 2	CK	5/12/20

DESIGNED RNS | CHECKED CEK | IN CHARGE CEK
DRAWN RNS

LIDAR MOUNTING CANOPY DETAIL

TOLL PLAZA 49 — LUCAS COUNTY

PROJECT 58-20-01
DATE: 04/22/2020

1136

2020 / 202

OHIO TURNPIKE

OHIO TURNPIKE AND INFRASTRUCTURE COMMISSION

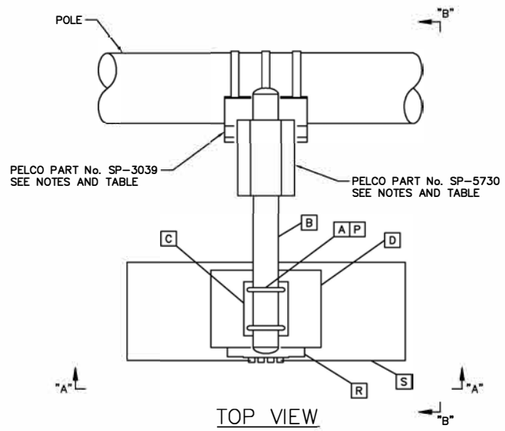

TOP VIEW

POS.	DESCRIPTION
A	MAST BRACKET STRAP P/N 5306222 (1 METER REQ'D) SS 304
B	RIGID PIPE ALUMINUM 2" DIA. X 20" (PELCO) ASTM B241 6061 T6 ALUMINUM
C	SICK MTG BRACKET P/N 2018304
D	SICK MTG BRACKET P/N 2059271
E	2" PIPE CAP ASTM B241 6061 T6 ALUMINUM
F	NOT USED
G	NOT USED
H	NOT USED
K	HEX HEAD CAP SCREW 1/4"X 1" ASTM F593 SS
L	FLAT WASHER 1/4" SS 304
M	LOCK WASHER 1/4" SS 304
N	HEX NUT 1/4 SS 304"
P	STRAP LOCK P/N 5306221 (2) REQ'D.
Q	SAFETY CABLE SC-18B
R	SICK LMS511 P/N 1046135
S	SICK WEATHER HOOD P/N 2063050

NOTES:

1. USE SC-18B SAFETY CABLE FROM TECHNI-LUX TO PROTECT SICK AGAINST ACCIDENTAL FALLING DOWN.
2. FOR TOLL GANTRY TOLL SITES USE PELCO BRACKET WITH 42" BAND FOR MOUNTING TO MAST ARM.
3. ALL MOUNTING BRACKS AND HARDWARE SHALL BE PROVIDED BY THE INTERGRATOR AND INSTALLED BY THE 58-20-01 CONTRACTOR.

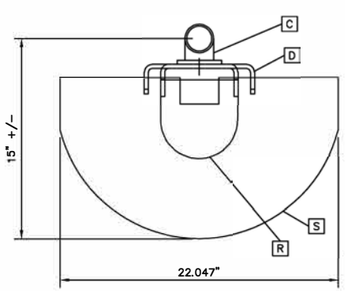

VIEW "A"

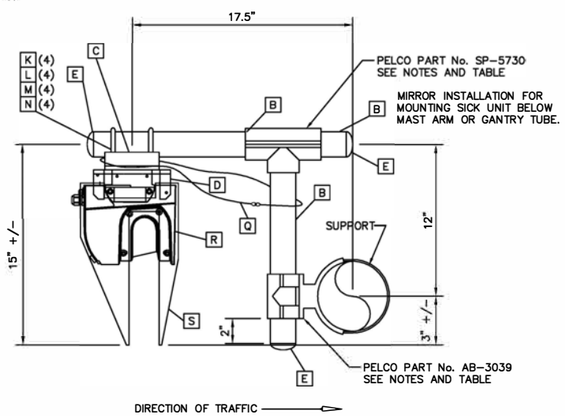

VIEW "B"

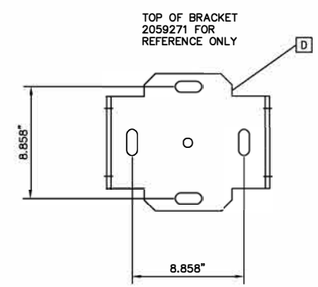

LIDAR MOUNTING DETAILS
(GANTRY)

△1 ENTIRE SHEET

DESIGN AGENCY
PRIME EV
540 White Pond Drive, Ste. E
Akron, Ohio 44320
(330)-864-7755

NO.	REVISIONS	BY	DATE
1	ADDENDUM No. 2	CK	5/1/20

DESIGNED RNS
CHECKED CEK
DRAWN RNS
IN CHARGE CEK

LIDAR MOUNTING GANTRY DETAIL
TOLL PLAZA 49
LUCAS COUNTY

PROJECT 58-20-01
DATE: 04/22/2020

OHIO TURNPIKE AND INFRASTRUCTURE COMMISSION

I137

202P
202

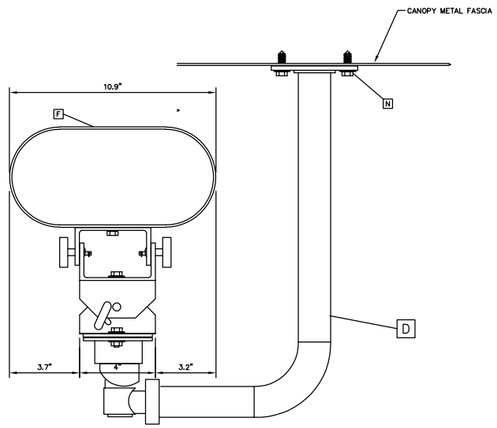

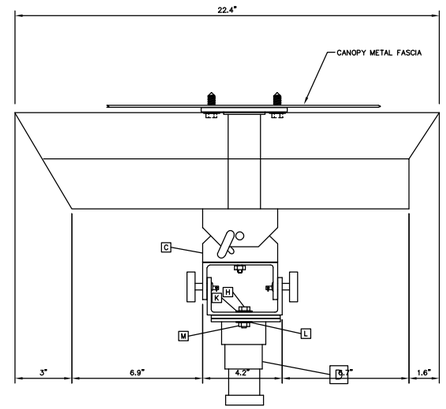

POS.	DESCRIPTION
A	BOLTS, PHILLIPS CONTERSUNK 3/8"X16X1.25" SS ASTM F879
B	CAMERA MOUNTING PLATE SERIES 2 6061-T6511 ALUMINUM
C	ADJUSTABLE CAMERA BRACKET
D	PELCO EC20 CEILING MOUNT
E	SAFETY CABLE SC-18B
F	VISCAM 1000
G	5/8"x .050" STANLESS BAND SUPPLIED W/PELCO BRACKET
H	HEX HEAAD BOLT 1/4"X20X1.5" ASTM F593 SS
K	FLAT WASHER 1/4" SS 304
L	LOCK NUT 1/4" SS 304
M	HEX NUT 1/4" ASTM F594 SS
N	SELF TAPPING 3/8" SHEET METAL SCREWS W/ SEALING WASHERS
P	
Q	
R	
S	
T	

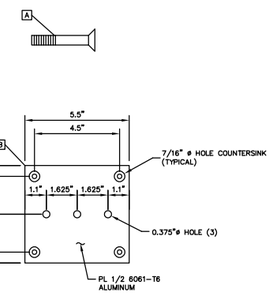

CAMERA MOUNTING PLATE

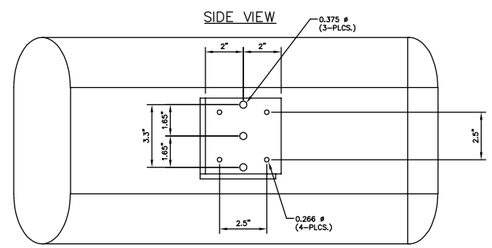

CAMERA MOUNT BOTTOM VIEW

NOTE:

1. ALL MOUNTING BRACKS AND HARDWARE SHALL BE PROVIDED BY THE INTERGRATOR AND INSTALLED BY THE 58-20-01 CONTRACTOR.

VES CAMERA MOUNTING DETAILS
(PLAZA CANOPY)

1 ENTIRE SHEET

DESIGN AGENCY
PRIME EV
540 White Pond Drive, Ste. E
Akron, Ohio 44320
(330)-864-7755

NO.	REVISIONS	BY	DATE
1	ADDENDUM No. 2	CK	5/12/20

DESIGNED RNS
CHECKED CEK
DRAWN RNS
IN CHARGE CEK

VES CAMERA MOUNTING CANOPY DETAIL
TOLL PLAZA 49
LUCAS COUNTY

PROJECT 58-20-01
DATE: 04/22/2020

OHIO TURNPIKE AND INFRASTRUCTURE COMMISSION

I138

202Q
202

NOTE:

1. ALL MOUNTING BRACKS AND HARDWARE SHALL BE PROVIDED BY THE INTERGRATOR AND INSTALLED BY THE 58-20-01 CONTRACTOR.

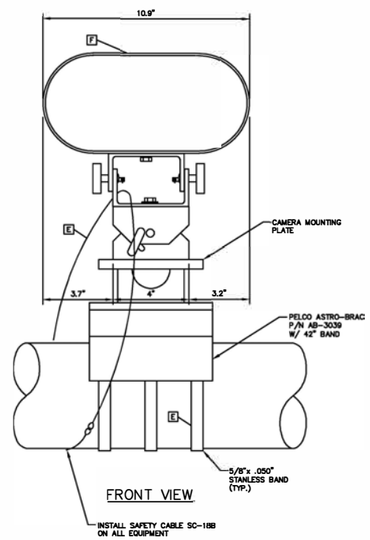

FRONT VIEW

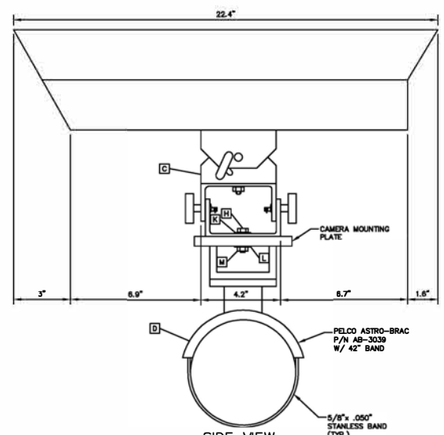

SIDE VIEW

POS.	DESCRIPTION
A	BOLTS, PHILLIPS CONTERSUNK 3/8"X16X1.25" SS ASTM F879
B	CAMERA MOUNTING PLATE SERIES 2 6061-T6511 ALUMINUM
C	ADJUSTABLE CAMERA BRACKET
D	PELCO ASTRO-BRAC P/N AB-3039 W/42" BAND
E	SAFETY CABLE SC-18B
F	VISCAM 1000
G	5/8"x .050" STANLESS BAND SUPPLIED W/PELCO BRACKET
H	HEX HEAAD BOLT 1/4"X20X1.5" ASTM F593 SS
K	FLAT WASHER 1/4" SS 304
L	LOCK NUT 1/4" SS 304
M	HEX NUT 1/4" ASTM F594 SS
N	
P	
Q	
R	
S	
T	

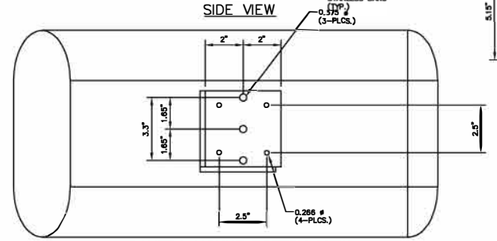

CAMERA MOUNT BOTTOM VIEW

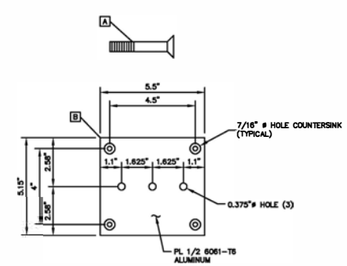

CAMERA MOUNTING PLATE

VES CAMERA MOUNTING DETAILS
(GANTRY)

1 ENTIRE SHEET

DESIGN AGENCY
PRIME EV
540 White Pond Drive, Ste. E
Akron, Ohio 44320
(330)-864-7755

OHIO TURNPIKE

NO.	REVISIONS	BY	DATE
1	ADDENDUM No. 2	CK	5/12/20

DESIGNED RNS | CHECKED CEK
DRAWN RNS | IN CHARGE CEK

VES CAMERA MOUNTING GANTRY DETAIL

TOLL PLAZA 49 — LUCAS COUNTY

PROJECT 58-20-01
DATE: 04/22/2020

OHIO TURNPIKE AND INFRASTRUCTURE COMMISSION

I139

202R / 202

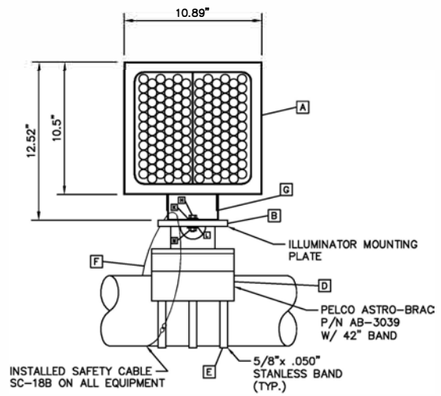

FRONT VIEW

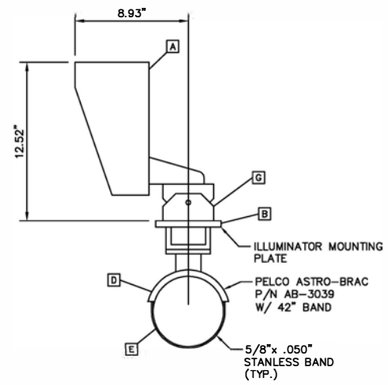

SIDE VIEW

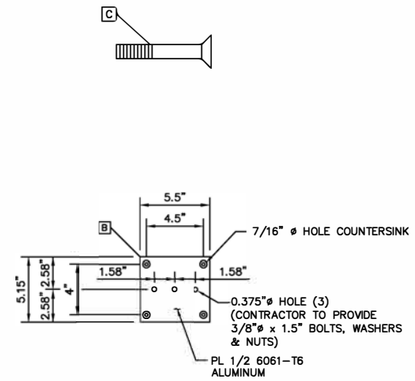

ILLUMINATOR MOUNTING PLATE

NOTE:

1. ALL MOUNTING BRACKS AND HARDWARE SHALL BE PROVIDED BY THE INTERGRATOR AND INSTALLED BY THE 58-20-01 CONTRACTOR.

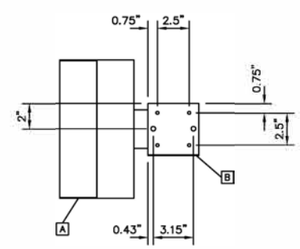

BOTTOM VIEW
ILLUMINATOR BRACKET

	POS.	DESCRIPTION
A	ILLUMINATOR TNL 50	
B	ILLUMINATOR MOUNTING PLATE SERIES 1	
C	BOLTS, PHILLIPS CONTERSUNK 3/8"X16X1.25" ASTM F879 SS	
D	PELCO ASTRO-BRAC P/N AB-3039 W/42" BAND 6061-T6 ALUMINUM	
E	5/8"x .050" STANLESS BAND 6061-T6 ALUMINUM	
F	SAFETY CABLE SC-18B	
G	ADJUSTABLE ILLUMINATOR BRACKET	
H	HEX HEAD BOLT 1/4"X20X1.5" ASTM F593 SS	
K	FLAT WASHER 1/4" SS 304	
L	LOCK NUT 1/4" SS 304	
M	HEX NUT 1/4" ASTM F594 SS	
N		
P		
Q		
R		
S		
T		

ILLUMIN ATOR MOUNTING DETAILS
(GANTRY)

1 ENTIRE SHEET

DESIGN AGENCY
PRIME EV
540 White Pond Drive, Ste. E
Akron, Ohio 44320
(330)-864-7755

OHIO TURNPIKE

NO.	REVISIONS	BY	DATE
1	ADDENDUM No. 2	CK	5/12/20

DESIGNED RNS | CHECKED CEK
DRAWN RNS | IN CHARGE CEK

VES CAMERA MOUNTING CANOPY DETAIL
LUCAS COUNTY
TOLL PLAZA 49

PROJECT 58-20-01
DATE: 04/22/2020

OHIO TURNPIKE AND INFRASTRUCTURE COMMISSION

I140

202S
202