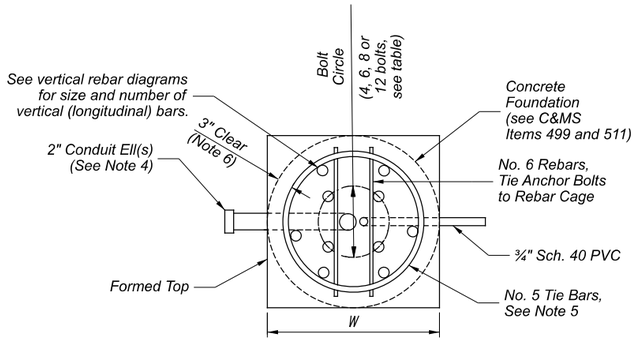

PLAN

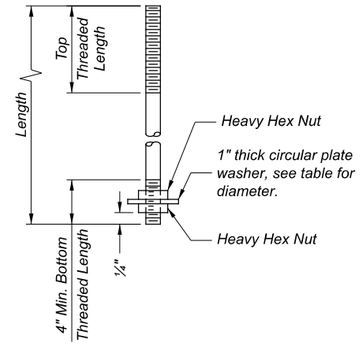

NUTTED ANCHOR BOLT OPTION

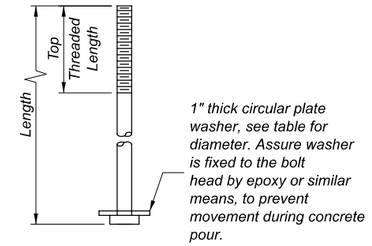

HEADED ANCHOR BOLT OPTION

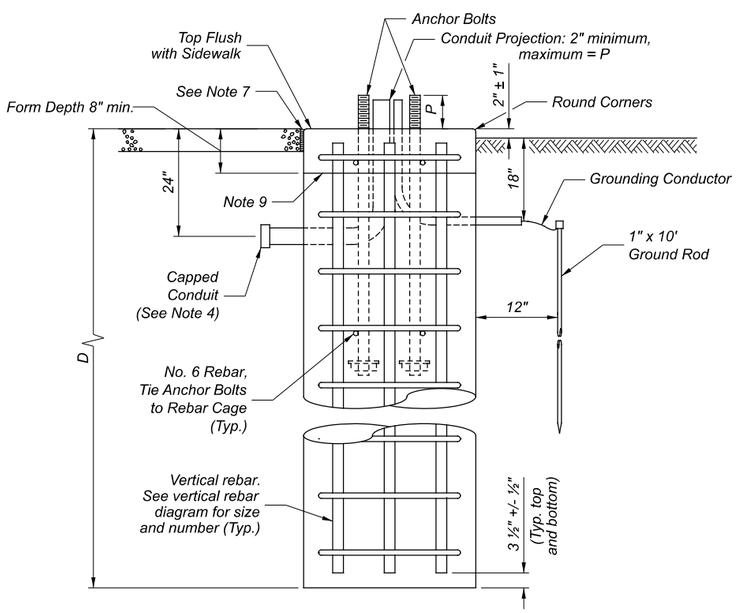

ELEVATION

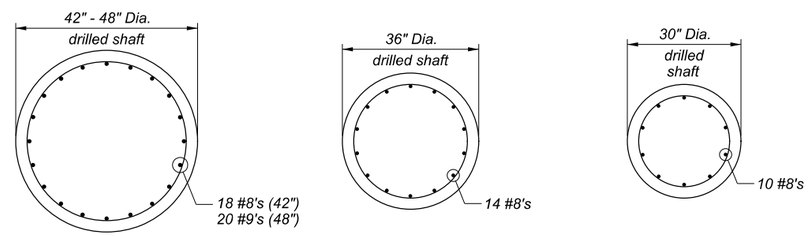

VERTICAL REBAR

ANCHOR BOLTS

ALL DIMENSIONS IN INCHES

DIA.	TOP THREAD LENGTH	THREADS PER INCH	PLATE WASHER DIAMETER
1 ½	12	6	3 ½
1 ¾	12	5	4
2	12	4 ½	5
2 ¼	12	4 ½	5

NOTES:

1. The design of the foundations presented on this drawing meet the requirements of the AASHTO LRFD Specifications for Structural Supports for Highway Signs, Luminaires, and Traffic Signals, First Edition 2015 (LRFDLTS-1) and all interim releases prior to the bid date of the project.
2. A special foundation design will be required when cohesive soil with undrained shear strength of less than 2000 lb./sq.ft. or granular soil with an angle of internal friction less than 30 degrees and a wet density less than 120 lb./cu.ft. is encountered. Special foundation design calculations and drawings shall be stamped by a Professional Engineer registered in the State of Ohio and shall be submitted to the Engineer for review and approval.
3. Anchor bolts shall meet the requirements of C&MS Items 630, 711.02, 730.02 and 732.11 except that 730.02 shall be modified to require the galvanizing limits to be full length of the anchor bolts not at least 2 inches beyond the threads. Threads shall be UNC-2A, and may be either rolled or cut, and coarse threaded. The embedded end of the anchor bolt shall be headed or threaded with a heavy hex nut. Provide smooth steel rod anchor bolt material threaded at the ends or over its entire length. Hex nuts shall be ASTM A563, American Standard heavy hex, Grade DH or A 194 Grade 2H, with UNC-2B threads. Plate washers shall be A709 Grade 36 or Grade 50. All nuts and plate washers shall be galvanized per C&MS Item 711.02. Anchor bolt washers shall meet the requirements of ASTM F 436 Type 1 (hot-dip galvanized) according to ASTM A 153.
4. Provide a minimum of one capped 2 inch conduit ell in Standard Construction Drawings (SCDs) TC-81.11 and TC-81.22 foundations for future use. This ell is in addition to any other conduits specified in the plans.
5. Tie spacing, starting from the top of the drilled shaft, shall be 3 inches between the first two ties and 12 inch spacing thereafter.
6. All reinforcing steel shall be epoxy coated and comply with and be placed in accordance with C&MS Item 509. Lap all rebar per the Lap Length table in C&MS Item 509. Rebar end hooks not required. 3-inch minimum cover is required.
7. Use ½ inch preformed joint filler as per C&MS Item 705.03 between foundations and adjacent paved areas.
8. At locations where the existing slope is 6:1 or greater, the buried depth of foundation shall apply to the low side of the slope. Set the top of the foundation 2 inches above the existing surface on the high side of the slope. The additional depth of foundation necessary to meet these requirements shall be added to the formed top.
9. In paved areas only, and only with permission of the Engineer, a construction joint may be placed to allow matching of the square, formed top to the finished pavement elevation. The location of this construction joint shall be at the top of the cylindrical portion of the drilled shaft. An ODOT inspector must be present during construction of each permitted joint, to assure adequate construction joint bonding by compliance with C&MS Item 511.
10. When two foundation diameters (W) are specified in the table, the Contractor may choose between them interchangeably.

ALL DIMENSIONS IN INCHES, UNLESS OTHERWISE NOTED

	TC-9.11 TYPE SUPPORTS			TC-9.31 TYPE SUPPORTS			TC-12.31 TYPE SUPPORTS			TC-16.22 & TC-81.22 TYPE SUPPORTS							TC-17.11 & TC-81.11 TYPE SUPPORTS				
DESIGN NO.		2	3	2	4	5	6	10	12	2	4	7	9	12	13	14	8	10	12	13	14
D (feet)		9	10	10	12	13	12	17	18	8	10	9	10	11	15	15	12	14	15	17	19
W		30	36	36	36	36	36	42 or 48	42 or 48	30	36	36	36	36	36	36	36	36	36	42 or 48	48
ANCHOR BOLTS	QUANTITY	4	4	4	4	6	6	6	6	4	4	4	4	4	4	4	4	6	6	8	12
	SIZE	1 ½ x 50	1 ¾ x 50	1 ¾ x 50	2 ¼ x 50	2 ¼ x 50	1 ½ x 58	1 ¾ x 58	2 x 58	1 ¾ x 58	2 x 58	1 ¾ x 50	1 ¾ x 50	2 x 58	2 x 58	2 x 58	2 x 50	2 x 54	2 x 61	2 x 64	2 x 74
	CIRCLE	13 ½	16	15	22	22	22	24	26	15	18	15	18	20	22	22	22	22	25	27	30
	P	9	9	9	9	9	9	9	9	9	9	9	9	9	9	9	9	9	9	9	9

OFFICE OF ROADWAY ENGINEERING

REVISIONS
04-17-2020 (NEW)

STDS ENGINEER
Duemmel

STATE OF OHIO DEPARTMENT OF TRANSPORTATION ADMINISTRATOR
David L. Holstein

FOUNDATIONS

DESIGN AGENCY

SCD NUMBER
TC-21.21

SHEET 1 TOTAL 1