GENERAL SUMMARY

ITEM	TOTAL	UNIT	DESCRIPTION	M.P. 104.3	M.P. 106.1	M.P. 106.8	M.P. 107.5
			GENERAL				
IB.ART.6	LUMP	LUMP SUM	PREMIUM FOR CONTRACT PERFORMANCE BOND AND PAYMENT BOND	LUMP	LUMP	LUMP	LUMP
SP 614	LUMP	LUMP SUM	MAINTAINING TRAFFIC	LUMP	LUMP	LUMP	LUMP
SP 614ZP	160	HOURS	ZONE PERSON WITH ZONE VEHICLE	40	40	40	40
SP 619	LUMP	LUMP SUM	FIELD OFFICE	LUMP	LUMP	LUMP	LUMP
SP 623	LUMP	LUMP SUM	CONSTRUCTION LAYOUT SURVEY	LUMP	LUMP	LUMP	LUMP
624	LUMP	LUMP SUM	MOBILIZATION	LUMP	LUMP	LUMP	LUMP
			ROADWAY				
201	LUMP	LUMP SUM	CLEARING AND GRUBBING	LUMP	LUMP	LUMP	LUMP
202	4846	FOOT	GUARDRAIL REMOVED	275	1810	1475	1286
202	16	EACH	ANCHOR ASSEMBLY REMOVED, TYPE A	4	4	4	4
202	284	FOOT	CURB REMOVED	54	84	66	80
202	16	EACH	BRIDGE TERMINAL ASSEMBLY REMOVED	4	4	4	4
202	3	EACH	CATCH BASIN REMOVED		1	2	
202	311	SQ. YD.	APPROACH SLAB REMOVED		100	112	99
203	3020	CU. YD.	EXCAVATION	110	1091	1076	743
203	3612	CU. YD.	EMBANKMENT	85	972	1160	1395
204	13576	SQ. YD.	SUBGRADE COMPACTION	771	3955	5877	2973
SP 302	1870 2	CU. YD.	ASPHALT CONCRETE BASE	81 2	582	780	427
SP 304	2073	CU. YD.	AGGREGATE BASE	126	648	807	492
407	1322	GALLON	NON-TRACKING TACK COAT	83	400	542	297
441	540	CU. YD.	ASPHALT CONCRETE INTERMEDIATE COURSE, TYPE 2, PG64-22	34	163	220	123
441	357	CU. YD.	ASPHALT CONCRETE SURFACE COURSE. TYPE 1, PG64-22	25	117	126	89
441	34	CU. YD.	ASPHALT CONCRETE SURFACE COURSE, TYPE 1, 449 (DRIVEWAYS)		2	32	
601	535	SQ. YD.	CRUSHED AGGREGATE SLOPE PROTECTION, AS PER PLAN		130	205	200
601	6.6	CU. YD.	ROCK CHANNEL PROTECTION, TYPE C WITH FILTER	2.2		2.2	2.2
605	985	FOOT.	AGGREGATE DRAINS			985	
606	2108	FOOT	GUARDRAIL, TYPE MGS	275	308	1475	50
606	3054	FOOT	GUARDRAIL, TYPE MGS WITH LONG POSTS		1854		1200
606	16	EACH	MGS BRIDGE TERMINAL ASSEMBLY, TYPE 1	4	4	4	4
606	14	EACH	ANCHOR ASSEMBLY, TYPE E	4	4	2	4
606	3	EACH	ANCHOR ASSEMBLY, TYPE T			3	
609	255	FOOT	CURB, TYPE 6	25	84	66	80
617	102	CU. YD.	COMPACTED AGGREGATE	9	27	48	18
621	41	EACH	RPM		20	21	
638	4	EACH	WATER VALVE BOX ADJUSTED TO GRADE			2	2
638	1	EACH	FIRE HYDRANT ADJUSTED TO GRADE			1	
642	1.33	MILE	EDGE LINE, 4", TYPE 1		0.69	0.64	
642	0.93	MILE	CENTER LINE, TYPE 1		0.35	0.32	0.26
642	42	FOOT	STOP LINE, TYPE 1		20	22	
659	15318	SQ. YD.	SEEDING AND MULCHING	464	3926	4653	6275
659	1543	CU. YD.	TOPSOIL	70	369	400	704
690	3	EACH	SPECIAL - MAILBOX REMOVED AND RESET		1		2
832	20,000	EACH	EROSION CONTROL	5000	5000	5000	5000

DESIGN AGENCY
OSBORN ENGINEERING
1111 Superior Avenue - Suite 2100 | Cleveland, OH 44114 (216)481-0200 www.osborn-eng.com
1201 East Market Street - Suite 200 | Akron, OH 44305 (330)435-3132

NO.	REVISIONS	BY	DATE
2	QUANTITY REVISIONS	DRP	10/11/23
-	-	-	-
-	-	-	-

DESIGNED	CHECKED
DRP	DCA
DRAWN	IN CHARGE
DRP	SMK

GENERAL SUMMARY

M.P. 104.3, 106.1, 106.8, AND 107.5 SANDUSKY AND ERIE COUNTIES

PROJECT 43-24-05

DATE: 06/30/23

OHIO TURNPIKE AND INFRASTRUCTURE COMMISSION

OHIO TURNPIKE

General Summary.dwg: 10/11/23 - 2:10pm

GENERAL SUMMARY

ITEM	TOTAL	UNIT	DESCRIPTION	M.P. 104.3	M.P. 106.1	M.P. 106.8	M.P. 107.5
			DRAINAGE				
SPECIAL	6	EACH	12" PRECAST END SECTION	2		2	2
SP 611	152	FOOT	12" CONDUIT, TYPE B	44		59	49
SP 611	2 274	FOOT	12" CONDUIT, TYPE F	2 102		89	83
SP 611	3	EACH	CATCH BASIN, NO. CB-1		1	2	
SP 611	13	EACH	CATCH BASIN RECONSTRUCTED TO GRADE, 4" TO 12"	4	3	2	4
SP 611	7	EACH	CATCH BASIN, NO. CB-1, GRATE AND CASTING	2	2	1	2
			MAINTENANCE OF TRAFFIC				
614	4	EACH	WORK ZONE IMPACT ATTENUATOR, 24" WIDE HAZARDS, (UNIDIRECTIONAL)			4	
614	22	EACH	BARRIER REFLECTOR, TYPE 1 (SPACED @ 50' c/c MAX.)			22	
614	22	EACH	OBJECT MARKER, ONE WAY (SPACED @ 50' c/c MAX.)			22	
614	0.19	MILE	WORK ZONE CENTER LINE, CLASS I, 740.06, TYPE I			0.19	
614	0.62	MILE	WORK ZONE EDGE LINE, CLASS I, 4", 642 PAINT (WHITE)			0.62	
614	0.71	MILE	WORK ZONE EDGE LINE, CLASS I, 4", 740.06, TYPE 1 (WHITE)			0.71	
614	20	FOOT	WORK ZONE STOP LINE, CLASS I, 740.06, TYPE 1			20	
614	40	HOUR	LAW ENFORCEMENT OFFICER WITH PATROL CAR FOR ASSISTANCE			40	
SP 614C	1942	FOOT	REMOVAL OF PAVEMENT MARKINGS			1942	
615	423	SQ. YD.	PAVEMENT FOR MAINTAINING TRAFFIC, CLASS A			423	
SP 622	840	FOOT	PORTABLE BARRIER (WITHOUT GLARE SCREEN)			840	
SP 622	200	CU. YD.	PORTABLE BARRIER, BRIDGE MOUNTED			200	
			STRUCTURES				
SP 202	LUMP	LUMP SUM	PORTIONS OF STRUCTURE REMOVED	LUMP	LUMP	LUMP	LUMP
509	800	POUND	REINFORCING STEEL, REPLACEMENT OF EXISTING REINFORCING STEEL	200	200	200	200
SP 509	261,957	POUND	EPOXY COATED REINFORCING STEEL, GRADE 60	62969	62977	71458	64553
510	2060	EACH	DOWEL HOLES WITH NON-SHRINK, NON-METALLIC GROUT	528	472	590	470
SP 511 (QC2)	645	CU. YD.	QC2 CONCRETE, SUPERSTRUCTURE DECK SLAB	155	155	180	155
SP 511 (QC2)	2 257	CU. YD.	QC2 CONCRETE, BARRIERS AND PARAPET	65	2 64	65	2 63
SP 511 (QC2)	2 166	CU. YD.	QC2 CONCRETE, ABUTMENT SLAB	2 37	2 41	2 47	2 41
511	40	CU. YD.	CLASS QC1 CONCRETE, PIER CAP	5	10	10	15
511	20	CU. YD.	CLASS QC1 CONCRETE, ABUTMENT	5	5	5	5
513	2 4185	EACH	WELDED SHEAR STUD CONNECTORS	2 2427	2 132	2 1538	88
513	2 17	EACH	2 STRUCTURAL STEEL MISC.: REMOVE AND REINSTALL EXISTING CROSSFRAMES			2 17	
516	LUMP	LUMP SUM	JACKING AND TEMPORARY SUPPORT OF SUPERSTRUCTURE, AS PER PLAN	LUMP	LUMP	LUMP	LUMP 1
SP 516A	8	FOOT	CRACK REPAIR USING EPOXY INJECTION		8		
SP 516B	2070	FOOT	SEALING OF CONSTRUCTION JOINTS	510	500	505	555
SP 516G	80	EACH	REPLACE EXPANSION BEARING DEVICE	20	20	20	20
SP 516J	60	EACH	REPLACE FIXED BEARING DEVICE	15	15	15	15
SP 519	1215	SQ. FT.	PATCHING OF CONCRETE STRUCTURES	58	362	560	235
526	440	SQ. YD.	REINFORCED CONCRETE APPROACH SLABS (T=12")	105	100	130	105
SP 527	LUMP	LUMP SUM	FALSEWORK, TEMPORARY BRACING AND PROTECTIVE STRUCTURES	LUMP	LUMP	LUMP	LUMP
SP 533	242	FOOT	3" CONTINUOUS STRIP SEAL IN STRUCTURAL STEEL JOINT	57	60	67	58
SP 533	242	FOOT	1 ½" ELASTOMERIC COMPRESSION SEAL IN STRUCTURAL STEEL JOINT	57	60	67	58
SP 536	3930	SQ. YD.	CONCRETE WEATHERPROOFING, DECK, ABUTMENT SLABS, AND APPROACH SLABS	960	935	1075	960
SP 536	1555	SQ. YD.	CONCRETE WEATHERPROOFING, BARRIERS AND PARAPETS	370	360	390	435
SP 536	1280	SQ. YD.	CONCRETE WEATHERPROOFING, SUBSTRUCTURE	315	315	335	315
SP 607	1705	FOOT	TYPE II FENCE, ALL ALUMINUM (6'-0" CHAIN LINK WITH SPECIALS)	425	400	415	465

NO.	REVISIONS	BY	DATE
1	ADDED PAY ITEM	MD	10/2/23
2	REVISED QUANTITIES	DRP	10/11/23
-	-	-	-

DESIGNED DRP | CHECKED DCA
DRAWN DRP | IN CHARGE SMK

DESIGN AGENCY
OSBORN ENGINEERING
1111 Superior Avenue - Suite 2100 | Cleveland, OH 44114 (216)481-0200 www.osborn-eng.com
1201 East Market Street - Suite 200 | Akron, OH 44305 (330)435-3132

GENERAL SUMMARY
M.P. 104.3, 106.1, 106.8, AND 107.5 SANDUSKY AND ERIE COUNTIES

PROJECT 43-24-05
DATE: 06/30/23

OHIO TURNPIKE AND INFRASTRUCTURE COMMISSION

General Summary.dwg: 10/12/23 - 10:48am

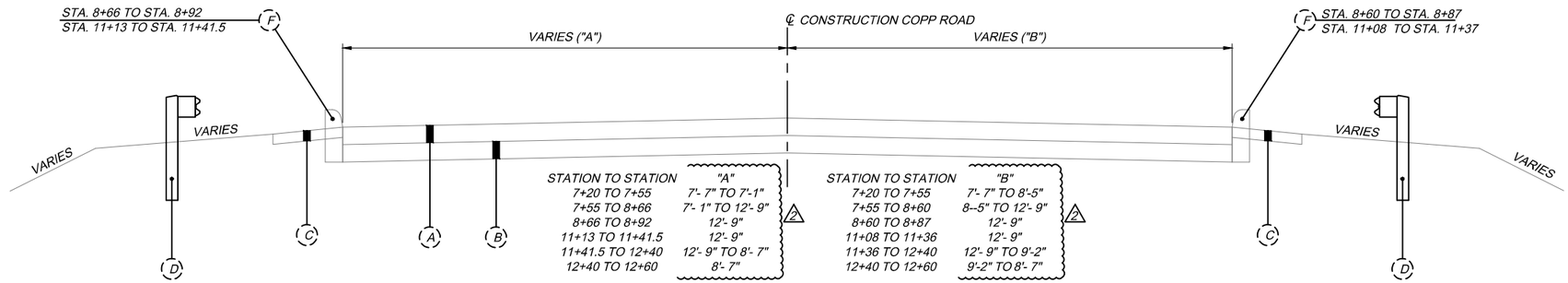

EXISTING NORMAL SECTION (COPP ROAD)

STA. 7+20.00 TO STA. 8+92.00
STA. 11+08.00 TO STA. 12+60.00

EXISTING LEGEND

- (A) EXISTING 4" (±) ASPHALT
- (B) EXISTING 5"(±) SUBBASE
- (C) EXISTING AGGREGATE SHOULDER
- (D) EXISTING GUARDRAIL
- (E) EXISTING TYPE 6 CURB

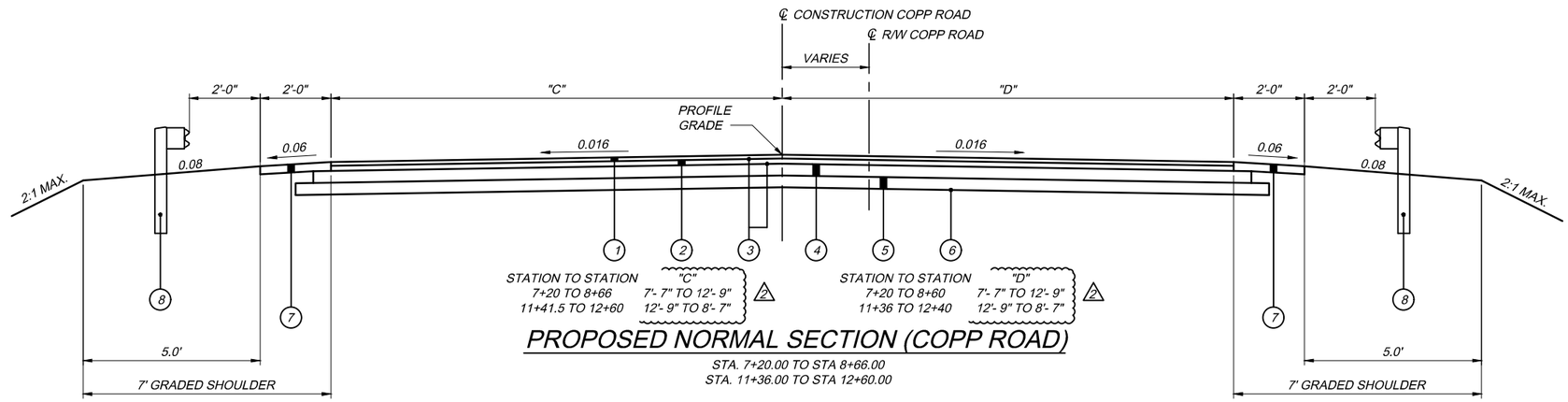

PROPOSED NORMAL SECTION (COPP ROAD)

STA. 7+20.00 TO STA 8+66.00
STA. 11+36.00 TO STA 12+60.00

PROPOSED LEGEND

(1)	ITEM 441	1 ¼" ASPHALT CONCRETE SURFACE COURSE, TYPE (449) PG64-22
(2)	ITEM 441	1 ¾" ASPHALT CONCRETE INTERMEDIATE COURSE, TYPE 1, (449)
(3)	ITEM 407	NON-TRACKING TACK COAT (0.06 GAL/SY)
(4)	SP 302	4" ASPHALT CONCRETE BASE, (449), PG64-22
(5)	SP 304	6" AGGREGATE BASE
(6)	ITEM 204	SUBGRADE COMPACTION
(7)	ITEM 617	3" COMPACTED AGGREGATE
(8)	ITEM 606	GUARDRAIL, TYPE MGS
(9)	ITEM 609	CURB, TYPE 6
(10)	ITEM 606	BRIDGE TERMINAL ASSEMBLY, TYPE 1
(11)	ITEM 526	REINFORCED CONCRETE APPROACH SLABS (T=12")

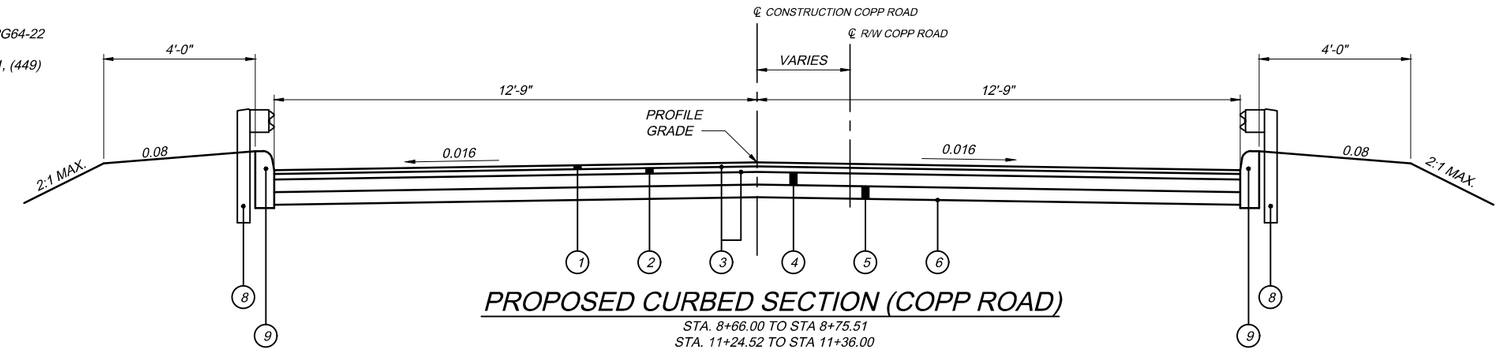

PROPOSED CURBED SECTION (COPP ROAD)

STA. 8+66.00 TO STA 8+75.51
STA. 11+24.52 TO STA 11+36.00

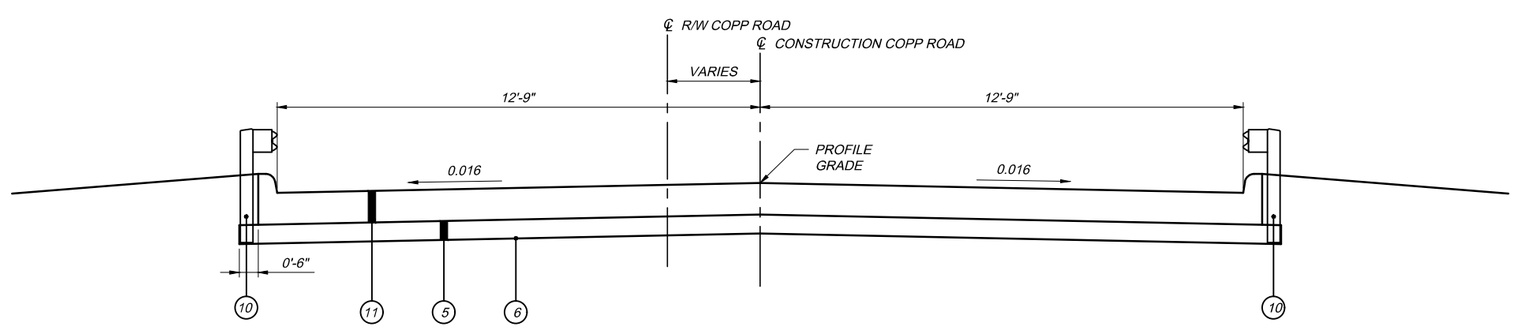

PROPOSED APPROACH SLAB SECTION (COPP ROAD)

STA. 8+75.51 TO STA 8+90.89
STA. 11+09.14 TO STA. 11+24.52

MP 104.3 Typical Section.dwg: 10/11/23 - 2:07pm

DESIGN AGENCY
OSBORN ENGINEERING
1111 Superior Avenue - Suite 2100 | Cleveland, OH 44114 (216)481-0200 www.osborn-eng.com
1201 East Market Street - Suite 200 | Akron, OH 44305 (330)535-5132

NO.	REVISIONS	BY	DATE
2	CORRECTED SECTION DIMENSIONS	DRP	10/11/23
-	-	-	-
-	-	-	-
-	-	-	-

DESIGNED	CHECKED
DRP	DCA
DRAWN	IN CHARGE
DRP	SMK

COPP ROAD TYPICAL SECTIONS
COPP ROAD OVER OHIO TURNPIKE
SANDUSKY COUNTY
M.P. 104.3

PROJECT 43-24-05
DATE: 06/30/23

OHIO TURNPIKE AND INFRASTRUCTURE COMMISSION

GENERAL NOTES

CONSTRUCTION SPECIFICATIONS

THE STATE OF OHIO DEPARTMENT OF TRANSPORTATION, CONSTRUCTION AND MATERIAL SPECIFICATIONS DATED JANUARY, 2019, AND THE SPECIAL PROVISIONS CONTAINED IN THE CONTRACT DOCUMENTS SHALL GOVERN THIS PROJECT.

UTILITIES

THE LOCATION OF THE UNDERGROUND UTILITIES SHOWN ON THE PLANS ARE AS OBTAINED FROM THE OWNERS AS REQUIRED BY SECTION 153.64 O.R.C. AT LEAST TWO WORKING DAYS PRIOR TO COMMENCING CONSTRUCTION OPERATIONS IN AN AREA WHICH MAY INVOLVE UNDERGROUND UTILITIES, THE CONTRACTOR SHALL NOTIFY THE PROJECT ENGINEER, THE OHIO UTILITIES PROTECTION SERVICE, TOLL-FREE 1-800-362-2764 AND THE OWNERS OF EACH UTILITY FACILITY.

LISTED BELOW ARE ALL UTILITIES LOCATED WITHIN THE PROJECT CONSTRUCTION LIMITS TOGETHER WITH THEIR RESPECTIVE OWNERS.

AT&T OHIO
130 NORTH ERIE STREET, ROOM 206
TOLEDO, OHIO 45604
419-245-7491

ERIE COUNTY DEPARTMENT OF
ENVIRONMENTAL SERVICES
554 RIVER ROAD
HURON, OHIO 44839
419-627-7666 EXT. 2071

ODOT DISTRICT 3
906 NORTH CLARK AVENUE
ASHLAND, OHIO 44805
419-207-7174

FRONTIER COMMUNICATIONS
300 WEST GYPSY LANE
BOWLING GREEN, OHIO 43402
740-396-2306

SANDUSKY COUNTY ENGINEERS
2500 WEST STATE STREET
FREEMONT, OHIO 43420
419-334-9731

LUMEN FOR CENTURY LINK
175 ASHLAND AVENUE
MANSFIELD, OHIO 44907
419-755-7956

NORTHERN OHIO RURAL WATER
2205 US HIGHWAY 20 E
NORWALK, OHIO 44857
419-688-7213

TOWNSEND TOWNSHIP
1736 NORTH COUNTY ROAD
VICKERY, OHIO 43464
419-603-3397

GROTON TOWNSHIP
9414 PORTLAND ROAD
CASTALIA, OHIO 44824
419-483-7840

OHIO EDISON/FIRST ENERGY
1910 WEST MARKET STREET, BLDG. 1
AKRON, OHIO 44313
419-206-7303

TEXAS EASTERN/NEXUS GAS TRANSMISSION
915 NORTH ELDRIDGE PARKWAY, SUITE 110
HOUSTON, TEXAS 77079
419-765-0990

ERIE COUNTY ENGINEERS
2700 COLUMBUS AVENUE
SANDUSKY, OHIO 44870
419-627-7711

OHIO TURNPIKE AND INFRASTRUCTURE
COMMISSION
DIVISION MAINTENANCE
TEDDY BAKER
440-821-3359

WORK LIMITS

THE WORK LIMITS SHOWN ON THESE PLANS ARE FOR PHYSICAL CONSTRUCTION ONLY. THE CONTRACTOR SHALL PROVIDE THE INSTALLATION AND OPERATION OF ALL WORK ZONE TRAFFIC CONTROL AND WORK ZONE TRAFFIC CONTROL DEVICES REQUIRED BY THESE PLANS WHETHER INSIDE OR OUTSIDE THESE WORK LIMITS.

CONNECTION BETWEEN EXISTING AND PROPOSED GUARDRAIL

WHEN IT IS NECESSARY TO SPLICE PROPOSED GUARDRAIL TO EXISTING GUARDRAIL, ONLY THE EXISTING GUARDRAIL SHALL BE CUT, DRILLED OR PUNCHED. THE CONNECTION SHALL BE MADE USING A W-BEAM RAIL SPLICE AS SHOWN IN AASHTO M 180. PAYMENT SHALL BE INCLUDED IN THE CONTRACT PRICE FOR ITEM 606, GUARDRAIL, TYPE MGS.

PAVEMENT

CONTRACTOR SHALL BE RESPONSIBLE FOR MAINTAINING ALL PAVEMENT OUTSIDE OF THE WORK LIMITS AT A CONDITION EQUAL TO OR BETTER THAN EXISTED PRIOR TO CONSTRUCTION. CONTRACTOR SHALL BE RESPONSIBLE FOR REPAIR OF ANY DAMAGE TO ROADS USED FOR ACCESS TO THE CONSTRUCTION SITE PER SP 109.

SURVEYING PARAMETERS

USE THE FOLLOWING PROJECT CONTROL, VERTICAL POSITION AND HORIZONTAL POSITIONING PARAMETERS FOR ALL SURVEYING:

PROJECT CONTROL

POSITIONING METHOD: ODOT VRS
MONUMENT TYPE: DGL CONTROL POINTS

VERTICAL POSITION:

ORTHOMETRIC HEIGHT DATUM: NAVD88
GEOID: 18

HORIZONTAL POSITIONING:

REFERENCE FRAME: NAD83 (2011)
ELLIPSOID: GRS80
MAP PROJECTION: LAMBERT CONFORMAL CONIC
COORDINATE SYSTEM: OHIO STATE PLANE NORTH ZONE
SCALE FACTOR: 1.0000
ORIGIN OF COORDINATE SYSTEM: 0.00, 0.00

USE THE POSITIONING METHODS AND MONUMENT TYPE USED IN THE ORIGINAL SURVEY TO RESTORE ALL MONUMENTS RELATED TO PRIMARY CONTROL THAT ARE DAMAGED OR DESTROYED BY CONSTRUCTION ACTIVITIES. RESTORE THE DAMAGE OR DESTROYED MONUMENTS IN ACCORDANCE WITH SP 623.

UNITS ARE IN U.S. SURVEY FEET, USE THE FOLLOWING CONVERSION FACTOR: 1 METER = 3.20833333 U.S. SURVEY FEET.

VARIATIONS IN EXISTING PAVEMENT THICKNESS

THE EXISTING PAVEMENT THICKNESS HAS BEEN REPRESENTED AS DERIVED FROM AS-BUILT PLANS. IT IS ANTICIPATED THAT THE EXISTING PAVEMENT THICKNESS WILL VARY ALONG THE LENGTH OF THE PROJECT. WHERE NOTED FOR REMOVAL, THE EXISTING PAVEMENT SHALL BE REMOVED REGARDLESS OF PAVEMENT THICKNESS AND ALL REMOVAL COSTS SHALL BE INCLUDED IN ITEM 203 EXCAVATION. ADDITIONAL COMPENSATION WILL NOT BE CONSIDERED FOR VARIATIONS IN THE EXISTING PAVEMENT THICKNESS.

REMOVAL OF EXISTING PRESSURE RELIEF JOINTS

REMOVAL OF THE EXISTING PRESSURE RELIEF JOINTS AS INDICATED ON THE PLANS, INCLUDING REMOVAL OF CURBS AND SLEEPER SLABS, SHALL BE INCIDENTAL TO THE WORK INCLUDED UNDER ITEM 203, EXCAVATION.

ITEM SPECIAL - MAILBOX REMOVED AND RESET

THIS WORK SHALL CONSIST OF REMOVING THE EXISTING MAILBOX SUPPORTS AND FURNISHING AND ERECTING NEW MAILBOX SUPPORTS AND ANY ASSOCIATED MOUNTING HARDWARE IN ACCORDANCE WITH PLAN DETAILS, AND ATTACHING THE SALVAGED MAILBOX OR OTHERWISE ESTABLISHED BY THE ENGINEER.

WOOD POSTS SHALL BE NOMINAL 4 INCHES BY 4 INCHES SQUARE OR 4.5 INCHES DIAMETER ROUND, AND CONFORM TO 710.14.

STEEL POSTS SHALL BE NOMINAL PIPE SIZE 2 INCHES I.D., AND CONFORM TO AASHTO M 181.

ALL HARDWARE INCLUDING BUT NOT LIMITED TO PLATES, SCREWS, BOLTS, ETC. SHALL BE COMMERCIAL-GRADE GALVANIZED STEEL.

POSTS SHALL BE SET PER THE FIRST PARAGRAPH OF 606.03, AND SHALL IN NO INSTANCE BE ENCASED IN CONCRETE.

SUPPORT HARDWARE SHALL ACCOMMODATE EITHER A SINGLE OR A DOUBLE MAILBOX INSTALLATION, AND NO MORE THAN TWO BOXES MAY BE MOUNTED ON A SINGLE POST.

THE MAILBOX SHALL BE SECURELY AND NEATLY ATTACHED BY THE CONTRACTOR TO THE NEW SUPPORT. THE CONTRACTOR SHALL FURNISH ALL NECESSARY ATTACHMENT HARDWARE (NUTS, BOLTS, PLATES, SPACERS, AND WASHERS) AS NECESSARY TO ACCOMMODATE THE COMPLETE INSTALLATION.

THE CONTRACTOR SHALL SALVAGE THE EXISTING BOX AND PLACE IT ON THE NEW SUPPORT. DUE CARE SHALL BE EXERCISED IN SUCH AN OPERATION, AND THE CONTRACTOR SHALL BE RESPONSIBLE FOR REPAIRING OR REPLACING ANY BOX DAMAGED BY IMPROPER HANDLING ON HIS PART, AS JUDGED AND DIRECTED BY THE ENGINEER.

THE CONTRACTOR SHALL BE RESPONSIBLE FOR COORDINATING WITH THE LOCAL POST MASTER REGARDING THE TIMING OF THE MOVEMENT OF ANY MAILBOX TO A NEW LOCATION.

PAYMENT UNDER THIS ITEM SHALL BE LIMITED TO FINAL PERMANENT INSTALLATIONS, TEMPORARY INSTALLATIONS SHALL BE IN ACCORDANCE WITH 107.10. HOWEVER, THE SAME MATERIAL AND SIZE LIMITATIONS AS FOR PERMANENT INSTALLATIONS SHALL APPLY.

MAILBOX REMOVAL AND RESETTING, INCLUDING THE NEW SUPPORTS, WILL BE PAID FOR AT THE CONTRACT UNIT PRICE PER EACH, FOR ITEM SPECIAL MAILBOX REMOVED AND RESET. THE FOLLOWING QUANTITY HAS BEEN CARRIED TO THE GENERAL SUMMARY FOR USE AS DIRECTED BY THE ENGINEER:

SPECIAL, MAILBOX REMOVED AND RESET 3 EACH

EXISTING RIGHT OF WAY FENCE

IT IS THE INTENT OF THE PROJECT FOR THE EXISTING RIGHT OF WAY FENCE NEAR THE BRIDGE TO REMAIN, HOWEVER IF THE CONTRACTOR DEEMS IT NECESSARY TO REMOVE THE FENCE FOR HIS OPERATIONS AS APPROVED BY THE ENGINEER, THE CONTRACTOR SHALL CAREFULLY REMOVE THE FENCE AND REINSTALL THE FENCE IN ACCORDANCE WITH ITEM 607. IF THE FENCE BECOMES DAMAGED DUE TO THE CONTRACTORS OPERATIONS, THE FENCE SHALL BE REPLACED AT NO COST TO THE COMMISSION.

ALL LABOR, MATERIALS, EQUIPMENT AND INCIDENTALS NECESSARY TO COMPLETE THE WORK SHALL BE CONSIDERED INCIDENTAL TO THE PROJECT AND NO ADDITIONAL COMPENSATION SHALL BE GRANTED.

AGGREGATE DRAINS

AGGREGATE DRAINS SHALL BE PLACED AT 50 FOOT INTERVALS ON EACH SIDE OF NORMAL CROWNED SECTIONS, STAGGERED SO THAT EACH DRAIN IS 25 FEET FROM THE ADJACENT DRAIN ON THE OPPOSITE SIDE, AND AT 25 FOOT INTERVALS ON THE LOW SIDE ONLY OF SUPERELEVATED SECTIONS. AN AGGREGATE DRAIN SHALL BE PLACED AT THE LOW POINT OF EACH SAG VERTICAL CURVE.

REMOVAL OF EXISTING STORM PIPE

WHERE INDICATED ON THE DRAWINGS, THE EXISTING STORM SEWER PIPE SHALL BE REMOVED AND REPLACED AT THE EXISTING LOCATION AND DEPTH. THE COST OF THE EXISTING PIPE REMOVAL SHALL BE INCIDENTAL TO THE UNIT PRICE BID FOR THE NEW STORM SEWER.

WATER WORK

ALL WATER WORK INDICATED ON THE DRAWINGS FOR NORTHWEST/SOUTHWEST ROAD (MP 106.1), SR 269 (MP 106.8), AND DEYO ROAD (MP 107.5) SHALL CONFORM TO THE LATEST STANDARDS OF THE ERIE COUNTY DEPARTMENT OF ENVIRONMENTAL SERVICE, AVAILABLE ONLINE AT THE FOLLOWING LINK:

HTTPS://WWW.ERIECOUNTY.OH.GOV/
STANDARDSPECIFICATIONSFORWATERMAINSANDAPPURTENANCES.ASPX

CLEARING AND GRUBBING

REMOVE ALL TREES AND STUMPS WITHIN THE CONSTRUCTION LIMITS UNDER THE LUMP SUM BID FOR ITEM 201, CLEARING AND GRUBBING. THE FOLLOWING IS AN APPROXIMATE ESTIMATE OF THE NUMBER OF TREES AND BUSHES TO BE REMOVED.

SIZES	NO. TREES	NO. BUSHES	TOTAL
6"	2	0	2
8"	2	0	2
9"	1	0	1
12"	1	0	1
14"	3	0	3
18"	4	0	4
20"	1	0	1
36"	1	0	1

2

ITEM 601 - CRUSHED AGGREGATE SLOPE PROTECTION, AS PER PLAN

THIS WORK SHALL CONSIST OF REPAIRING THE EXISTING CRUSHED AGGREGATE SLOPE PROTECTION AT BOTH BRIDGE ABUTMENTS FOR THE FOLLOWING BRIDGE LOCATIONS:

M.P. 106.1 - NORTHWEST/SOUTHWEST ROAD
M.P. 106.8 - STATE ROUTE 269
M.P. 107.5 - DEYO ROAD

AREAS TO BE REPAIRED SHALL BE AS DIRECTED BY THE ENGINEER.

DESIGN AGENCY
OSBORN ENGINEERING
1111 Superior Avenue - Suite 2100 | Cleveland, OH 44114 (216)481-5200 www.osborn-eng.com
1201 East Market Street - Suite 200 | Akron, OH 44305 (330)435-3132

NO.	REVISIONS	BY	DATE
2	ADDED PLAN NOTE	JB	10/11/23
-	-	-	-
-	-	-	-

DESIGNED	CHECKED
MVN	DCA
DRAWN	IN CHARGE
MVN	SMK

GENERAL NOTES
M.P. 104.3, 106.1, 106.8, AND 107.5 SANDUSKY AND ERIE COUNTIES

PROJECT 43-24-05
DATE: 06/30/23

OHIO TURNPIKE AND INFRASTRUCTURE COMMISSION

General Notes.dwg; 10/11/23 - 2:48pm

STRUCTURE - GENERAL NOTES

PROPOSED WORK

THE COPP ROAD BRIDGE AT MP 104.3, NORTHWEST-SOUTHWEST ROAD BRIDGE AT MP 106.1, SR 269 BRIDGE AT MP 106.8 AND THE DEYO ROAD BRIDGE AT MP 107.5, ALL OVER THE OHIO TURNPIKE SHALL BE REHABILITATED UNDER THIS CONTRACT. MAJOR WORK INCLUDES REPLACING THE BRIDGE DECK, ABUTMENT SLABS, APPROACH SLABS, BEARING DEVICES AND DECK JOINTS, RAISING EACH BRIDGE TO IMPROVE THE VERTICAL CLEARANCE, INSTALLING SHEAR CONNECTORS AS NEEDED, INSTALLING NEW FENCING, PATCHING AND REPAIR OF SUBSTRUCTURE UNITS, SEALING OF CONSTRUCTION JOINTS, PERFORMING CONCRETE WEATHERPROOFING, AND MAINTENANCE OF TRAFFIC. THE SR 269 BRIDGE SHALL BE PERFORMED PART-WIDTH. DETAILS OF THIS WORK ARE SHOWN IN THE PLANS.

DESIGN SPECIFICATIONS

THIS PROJECT CONFORMS TO "STANDARD SPECIFICATIONS FOR HIGHWAY BRIDGES" ADOPTED BY THE AMERICAN ASSOCIATION OF STATE HIGHWAY AND TRANSPORTATION OFFICIALS, DATED 2002, AND THE ODOT BRIDGE DESIGN MANUAL, 2004 EDITION.

THE CLASS OF CONCRETE AND THE GRADES OF REINFORCING STEEL FOR THE CONSTRUCTION ARE AS FOLLOWS:

CONCRETE CLASS QC1 – COMPRESSIVE STRENGTH 4000 PSI (SUBSTRUCTURE)

CONCRETE CLASS QC2 – COMPRESSIVE STRENGTH 4500 PSI (DECK AND ABUTMENT SLAB)

REINFORCING STEEL ASTM A615, A616, A617 – GRADE 60

DESIGN LOADING

HS20-44 (CASE II) AND THE ALTERNATE MILITARY LOADING.

DECK PROTECTION METHOD

EPOXY COATED REINFORCING STEEL
2 ½" CONCRETE COVER

MONOLITHIC WEARING SURFACE

MONOLITHIC WEARING SURFACE IS ASSUMED, FOR DESIGN PURPOSES TO BE 1" THICK.

ORIGINAL CONSTRUCTION PLANS

THE ORIGINAL CONSTRUCTION PLANS, SHOWING THE ORIGINAL ALIGNMENT, PROFILE AND DETAILS OF THE BRIDGE ARE AVAILABLE ON BID EXPRESS WITH THE OTHER BID DOCUMENTS.

PROTECTION OF TRAFFIC

THE CONTRACTOR SHALL SUBMIT A PLAN TO PROTECT THE TRAVELING PUBLIC FROM ALL REMOVAL DEBRIS AND/OR CONSTRUCTION MATERIAL THAT MAY COME IN CONTACT OR POSE A DANGER TO THE TRAVELING PUBLIC, SPECIFICALLY BELOW ON THE TURNPIKE LANES. HYDRODEMOLITION WATER, SLURRY AND/OR WASTE SHALL NOT BE PERMITTED TO FLOW OR FALL ONTO OPEN LANES OF TRAFFIC OR INTO STORM SEWERS. THE CONTRACTOR MAY PERFORM THE WORK DURING A WEEKEND, IN ACCORDANCE WITH SP 104. THE PLAN MUST BE SUBMITTED TO THE COMMISSION AND GOVERNING LOCAL AGENCIES PRIOR TO THE COMMENCEMENT OF ANY WORK.

UTILITIES

THE CONTRACTOR SHALL EXERCISE DUE CAUTION WHILE PERFORMING WORK ACTIVITIES AROUND EXPOSED UTILITIES. THE CONTRACTOR MUST ENSURE THAT THESE UTILITIES ARE NOT DAMAGED AS A RESULT OF WORK ACTIVITIES OR THE OPERATION OF EQUIPMENT, AND THE CONTRACTOR MAY BE REQUIRED TO PROVIDE TEMPORARY PROTECTIVE OR SUPPORT SYSTEMS IN ORDER TO PREVENT DAMAGE TO UTILITY LINES AND THEIR SUPPORTS DURING STRUCTURE REPAIR OPERATIONS. IF ANY UTILITIES ARE DAMAGED DURING CONSTRUCTION ACTIVITIES, THE CONTRACTOR SHALL IMMEDIATELY NOTIFY THE ENGINEER AND THE APPROPRIATE UTILITY OWNER(S).

EXISTING STRUCTURE VERIFICATION

DETAILS, DIMENSIONS AND ELEVATIONS SHOWN ON THESE PLANS PERTAINING TO THE EXISTING STRUCTURE HAVE BEEN OBTAINED FROM PLANS OF THE EXISTING STRUCTURE AND/OR FROM FIELD OBSERVATIONS AND MEASUREMENTS. CONSEQUENTLY, THEY ARE INDICATIVE OF THE EXISTING STRUCTURE AND THE PROPOSED WORK BUT THEY SHALL BE CONSIDERED TENTATIVE AND APPROXIMATE. THE CONTRACTOR IS REFERRED TO SECTION 501.02 OF THE SPECIFICATIONS AND OTIC INSTRUCTION TO BIDDERS ARTICLE 2.1 AND GENERAL CONDITIONS ARTICLE 1.5.

CONTRACT BID PRICES SHALL BE BASED UPON A RECOGNITION OF THE UNCERTAINTIES DESCRIBED ABOVE AND UPON A PREBID EXAMINATION OF THE EXISTING STRUCTURE BY THE CONTRACTOR. HOWEVER, ALL PROJECT WORK SHALL BE BASED UPON ACTUAL DETAILS, DIMENSIONS, ELEVATIONS AND SKEW ANGLES WHICH HAVE BEEN VERIFIED IN THE FIELD BY THE CONTRACTOR. THE STRUCTURAL STEEL AND STRUCTURAL STEEL DECK JOINTS SHALL NOT BE FABRICATED UNTIL DETAILS, DIMENSIONS, ELEVATIONS AND SKEW ANGLES HAVE BEEN FIELD VERIFIED BY THE CONTRACTOR.

ANY ADDITIONAL COSTS RESULTING FROM VARIATIONS FROM PLAN DIMENSIONS SHALL BE THE RESPONSIBILITY OF THE CONTRACTOR AND NO ADDITIONAL PAYMENT OVER THE UNIT PRICE BID WILL BE AWARDED BY THE COMMISSION.

REMOVAL

GENERAL:

THE CONTRACTOR SHALL REMOVE THE DESIGNATED PORTIONS OF THE EXISTING STRUCTURE TO THE LIMITS SHOWN ON THE PLANS OR TO THE LIMITS AS DIRECTED BY THE ENGINEER. WHEN SO DIRECTED BY THE ENGINEER, THE CONTRACTOR SHALL WET DOWN THE CONCRETE THOROUGHLY DURING REMOVAL OPERATIONS TO PREVENT SPREAD OF DUST. ALL NECESSARY LABOR, EQUIPMENT AND MATERIAL SHALL BE PROVIDED BY THE CONTRACTOR AND INCLUDED WITH ITEM SP 202, PORTIONS OF STRUCTURE REMOVED, FOR PAYMENT.

CONCRETE REMOVAL:

CONCRETE SHALL BE REMOVED BY MEANS OF APPROVED PNEUMATIC HAMMERS EMPLOYING POINTED AND BLUNT CHISEL EDGED TOOLS AND/OR SAW CUTTING THE CONCRETE DECKS AND REMOVING IN SECTIONS.

CARE SHALL BE TAKEN TO ENSURE AGAINST DAMAGE TO THE STEEL AND CONCRETE MEMBERS WHICH ARE TO BE RETAINED AND TO PRESERVE THE BOND OF THE RETAINED REINFORCEMENT TO THE EXISTING CONCRETE. THESE BARS SHALL BE CLEANED OF ALL CONCRETE FRAGMENTS AND FOREIGN MATTER. PNEUMATIC HAMMERS SHALL NOT BE PLACED IN DIRECT CONTACT WITH THE BARS; HAND TOOLS SHALL BE EMPLOYED FOR FINAL CLEANING. DAMAGED AREAS OF REINFORCEMENT THAT ARE TO REMAIN SHALL BE CUT AND STRESS TRANSFER ACCOMPLISHED BY EITHER A LAPPED OR MECHANICAL SPLICE. ANY ADDITIONAL REINFORCEMENT OR MECHANICAL SPLICES SHALL BE PROVIDED BY THE CONTRACTOR AT NO ADDITIONAL COST TO THE COMMISSION. OTHER EXISTING REINFORCEMENT WITHIN THE REMOVAL LIMITS SHALL BE REMOVED AND DISPOSED OF.

DISPOSAL OF REMOVED MATERIAL:

THE CONTRACTOR SHALL NOT PERMIT ANY REMOVED MATERIAL TO DROP TO THE GROUND. MEANS SHALL BE PROVIDED FOR CATCHING REMOVED MATERIAL. THE CONTRACTOR SHALL SUBMIT TO THE ENGINEER FOR APPROVAL DETAILS OF THE METHODS TO BE USED FOR REMOVING AND COLLECTING THE MATERIAL. ALL CONCRETE, STEEL, REINFORCING STEEL, ASPHALT, ETC. REMOVED FROM THE STRUCTURE, UNLESS SPECIFIED, SHALL BECOME THE PROPERTY OF THE CONTRACTOR AND SHALL BE PROMPTLY REMOVED BY HIM FROM THE SITE.

UNDER NO CIRCUMSTANCES SHALL THE MATERIAL BE PERMITTED TO REMAIN ON THE PREMISES, RIGHT-OF-WAY OR STREETS PENDING DISPOSAL OF SAME OR FOR ANY OTHER PURPOSES, UNLESS OTHERWISE SPECIFIED BY THE ENGINEER.

CUTTING OR BENDING OF REINFORCING BARS

ANY CUTTING OR BENDING OF BARS NECESSARY TO ACCOMMODATE ANY ESSENTIAL ELEMENT OF WORK RELATED TO THE PROJECT, SHALL BE INCLUDED IN THE UNIT PRICE BID FOR ITEM 509 - REINFORCING STEEL, REPLACEMENT OF EXISTING REINFORCING STEEL AND/OR ITEM SP 509 EPOXY COATED REINFORCING STEEL UNLESS OTHERWISE NOTED.

DIMENSIONS

DIMENSIONS GIVEN ARE MEASURED HORIZONTALLY AND AT 60° F UNLESS OTHERWISE NOTED. DIMENSIONS GIVEN FOR THE EXISTING STRUCTURE ARE FROM THE ORIGINAL CONSTRUCTION PLANS. SOME VARIATION FROM PLAN DIMENSIONS ARE EXPECTED. THE CONTRACTOR SHALL BE RESPONSIBLE FOR PROPER FIT-UP BETWEEN THE PROPOSED AND EXISTING CONSTRUCTION. ADEQUATE MEASUREMENTS SHALL BE MADE IN THE FIELD PRIOR TO THE FABRICATION OR INSTALLATION OF ANY PART TO ENSURE THAT ALL PARTS CAN BE PROPERLY ASSEMBLED AS SPECIFIED IN THE PLANS. ANY ADDITIONAL COST RESULTING FROM VARIATIONS FROM PLAN DIMENSIONS IS THE RESPONSIBILITY OF THE CONTRACTOR AND NO ADDITIONAL PAYMENT WILL BE AWARDED BY THE COMMISSION.

REPAIR OF EXISTING CONCRETE ELEMENTS

EXISTING REINFORCED CONCRETE STRUCTURE ELEMENTS WHICH ARE INCORPORATED IN THIS CONSTRUCTION PROJECT ARE TO BE MODIFIED AND/OR REPAIRED. A CONDITION SURVEY WAS PERFORMED IN JUNE 2022. REPAIR AREAS WERE DETERMINED BY VISUAL AND SOUNDING INSPECTIONS. THE STRUCTURAL ELEMENTS INSPECTED INCLUDE CONCRETE ABUTMENTS AND PIERS (EXPOSED SURFACES ONLY). THE RECORDS OF THIS INSPECTION ARE THE BASIS FOR THE REPAIR RECOMMENDATIONS AS DETAILED IN THE PLANS.

ITEM 509 - REINFORCING STEEL, REPLACEMENT OF EXISTING REINFORCING STEEL

REPLACE ALL EXISTING REINFORCING BARS DEEMED BY THE ENGINEER TO BE UNUSABLE BECAUSE OF CORROSION. THE COMMISSION WILL MEASURE THE REPLACEMENT REINFORCING STEEL BY THE NUMBER OF POUNDS ACCEPTED IN PLACE. AN ESTIMATED QUANTITY OF 800 POUNDS HAS BEEN INCLUDED FOR THIS WORK. REPLACE ALL EXISTING REINFORCING STEEL BARS WHICH ARE TO BE INCORPORATED INTO THE NEW WORK AND ARE DEEMED BY THE ENGINEER TO BE MADE UNUSABLE BY REMOVAL OPERATIONS WITH NEW EPOXY COATED REINFORCING STEEL OF THE SAME SIZE AT NO COST TO THE COMMISSION.

2 ITEM 513 - STRUCTURAL STEEL, MISC.: REMOVE AND REINSTALL EXISTING CROSSFRAMES

THIS WORK CONSISTS OF THE REMOVAL AND INSTALLATION OF THE EXISTING STEEL CROSSFRAMES AT M.P. 106.8 (STATE ROUTE 269) AS SHOWN ON THE PHASE CONSTRUCTION PLAN SHEETS 96 AND 97. ONLY CROSSFRAMES IN BAY 2 ARE TO BE REMOVED AND STORED FOR REUSE. THE EXISTING ½" PLATE WELDED TO EACH BEAM SHALL REMAIN IN PLACE. THE RIVETS SHALL BE DRILLED OUT OF EACH PLATE TAKING CAUTION NOT TO ENLARGE THEM BEYOND 5% OF THE ORIGINAL DIAMETER OR DEFORM THE EXISTING HOLES IN ANY MANNER.

WHEN THE ENTIRE BRIDGE STRUCTURE HAS BEEN RAISED TO ITS FINAL CONDITION, THE CONTRACTOR SHALL PLACE THE EXISTING CROSSFRAMES WITHIN BAY 2 WITH BOLTS INSTALLED IN A SNUG TIGHT CONDITION PRIOR TO PHASE 2 DECK PLACEMENT. ONCE DECK PLACEMENT IS COMPLETE, THE CONTRACTOR SHALL TIGHTEN THE BOLTS ACCORDING TO C&MS 513.

THE ⅞" DIAMETER BOLTS SHALL BE TYPE 1 GALVANIZED. ALL BOLTS SHALL BE ASTM F3125, GRADE A325, WITH THREADS EXCLUDED FROM THE SHEAR PLANE. EACH BOLT LOCATION SHALL INCLUDE A BOLT, NUT, AND TWO (2) WASHERS.

ANY DAMAGE TO THE EXISTING STEEL COATING SYSTEM AS A RESULT OF THIS WORK SHALL BE PAINTED IN ACCORDANCE WITH SP514A. PAINTING SHALL NOT BE PAID FOR DIRECTLY, BUT SHALL BE CONSIDERED INCIDENTAL TO THE ITEM.

ALL LABOR, MATERIALS, EQUIPMENT, AND INCIDENTALS NECESSARY TO COMPLETE THE WORK SHALL BE CONSIDERED INCIDENTAL TO ITEM 513 - STRUCTURAL STEEL, MISC.: REMOVE AND REINSTALL EXISTING CROSSFRAMES AND NO ADDITIONAL COMPENSATION SHALL BE GRANTED BY THE COMMISSION.

ITEM SP 536 - CONCRETE WEATHERPROOFING

ITEM SP 536 - CONCRETE WEATHERPROOFING SHALL BE APPLIED TO THE FOLLOWING NEW EXPOSED CONCRETE SURFACES OF THE BRIDGE:

- THE TOP OF NEW ABUTMENT SLABS AND NEW SUPERSTRUCTURE SLABS.
- ALL NEW PARAPET SURFACES AND SLAB SIDE EDGES.
- THE BOTTOM SURFACE OF THE NEW SUPERSTRUCTURE SLAB FROM THE SLAB SIDE EDGE TO THE EXTERIOR STRINGER FLANGE.
- ALL EXPOSED CONCRETE SURFACES OF ALL ABUTMENTS AND PIERS. SEALING SHALL NOT BE DONE UNTIL ALL CONCRETE PATCHING REPAIRS HAVE BEEN COMPLETED AND CURED.

CARE SHALL BE TAKEN NOT TO APPLY WEATHERPROOFING ON CONSTRUCTION JOINT SURFACES, SURFACES TO RECEIVE JOINT SEALER OR FASCIA BEAM PAINT.

CONCRETE PARAPETS

DEFLECTION JOINTS:

DEFLECTION JOINTS SHALL BE CONSTRUCTED BY SAWING THE CONCRETE AFTER IT HAS TAKEN ITS INITIAL SET AND BEFORE ANY CRACKS DEVELOP. THE USE OF AN EDGE GUIDE, FENCE OR JIG SHALL BE USED TO ENSURE THAT THE CUT JOINTS SHALL BE STRAIGHT, TRUE AND ALIGNED ON BOTH FACES OF THE PARAPET. THE JOINT SHALL BE THE WIDTH OF THE SAW BLADE, NOT TO EXCEED ONE QUARTER (0.25) INCH, AND SHALL BE ONE AND ONE-HALF (1.5) INCHES DEEP. THE SAW CUT SHALL BE MADE IN THE COMPLETE CIRCUMFERENCE OF THE PARAPET, STARTING AND ENDING AT THE ELEVATION OF THE CONCRETE DECK, EXCEPT AS NOTED ON THE PLANS AND SHALL BE CAULKED WITH A ONE (1) INCH THICKNESS OF MATERIAL CONFORMING TO FEDERAL SPECIFICATION TT-S-00227E. THE BOTTOM HALF (0.5) INCH OF THE SAWED JOINT AT THE OUTSIDE FACE OF THE PARAPET SHALL BE LEFT UNSEALED TO ALLOW ANY WATER WHICH MAY ENTER THE JOINT TO ESCAPE.

PARAPET FORMS:

FORMS FOR THE BRIDGE PARAPETS AND SLAB EDGES SHALL BE IN ACCORDANCE WITH 508.02 OF THE SPECIFICATIONS AND THE FOLLOWING:

WHEN WOOD FORMS ARE USED THEY SHALL PROVIDE A SMOOTH SURFACE OF UNIFORM TEXTURE AND COLOR SUBSTANTIALLY EQUAL TO THAT WHICH WOULD BE OBTAINED WITH THE USE OF NEW PLYWOOD CONFORMING TO THE NATIONAL INSTITUTE OF STANDARDS AND TECHNOLOGY PRODUCT STANDARD PSI FOR EXTERIOR B-B CLASS I PLYWOOD.
FORMS SHALL BE OF A CONSTRUCTION WHICH WOULD ALLOW FOR THEIR REMOVAL WITHIN 24 HOURS OF THE CONCRETE PLACEMENT WITHOUT CAUSING DAMAGE TO THE CONCRETE.

CONSTRUCTION JOINTS

CONSTRUCTION JOINT SURFACES SHALL BE FREE FROM OIL LAITANCE, FORM RELEASE AGENTS OR ANY OTHER MATERIAL THAT WOULD PREVENT BONDING TO THE CONCRETE SURFACE. ALL LAITANCE AND OTHER CONTAMINANTS SHALL BE REMOVED BY HIGH PRESSURE WATER BLASTING WITH A MINIMUM PRESSURE OF 5000 PSI. HOWEVER, WATER BLASTING SHALL NOT BE REQUIRED WHERE EXISTING CONCRETE HAS BEEN ROUGHENED BY JACKHAMMERS DURING PREVIOUS CONCRETE REMOVAL OPERATIONS. SURFACES SHALL BE THOROUGHLY DRENCHED WITH CLEAN WATER AND ALLOWED TO DRY TO A DAMP CONDITION, FREE OF STANDING WATER BEFORE PLACING CONCRETE.

PREPARATION OF CONSTRUCTION JOINT SURFACES SHALL NOT BE MEASURED FOR PAYMENT. THE COST THEREOF SHALL BE INCLUDED IN THE CONTRACT PRICE BID OF THE PERTINENT CONCRETE ITEMS.

EXISTING RIGHT OF WAY FENCE

IT IS THE INTENT OF THE PROJECT FOR THE EXISTING RIGHT OF WAY FENCE NEAR THE BRIDGE (4 QUADRANTS) TO REMAIN. HOWEVER, IF THE CONTRACTOR DEEMS IT NECESSARY TO REMOVE THE FENCE FOR HIS OPERATIONS AS APPROVED BY THE ENGINEER, THE CONTRACTOR SHALL CAREFULLY REMOVE THE FENCE AND REINSTALL THE FENCE IN ACCORDANCE WITH ITEM 607. IF THE FENCE BECOMES DAMAGED DUE TO THE CONTRACTORS OPERATIONS, THE FENCE, OR PORTIONS THEREOF, SHALL BE REPLACED AT NO COST TO THE COMMISSION. THIS ITEM DOES NOT INCLUDE ANY PORTIONS OF FENCING THAT ARE SPECIFICALLY CALLED OT WITHIN THE PROJECT FOR REPAIR OR REPLACEMENT.

EROSION CONTROL

IT IS THE INTENT OF THE PROJECT TO NOT DISTURB ANY SEEDED AREAS AND/OR DRAINAGE ELEMENTS, UNLESS SPECIFICALLY CALLED OUT IN THE PROJECT. ANY WORK INVOLVING SEEDED AREAS, DRAINAGE ELEMENTS OR EROSION CONTROL SHALL BE REPAIRED/REPLACED OR PROTECTED AS DIRECTED BY THE ENGINEER.

ALL LABOR, MATERIALS, EQUIPMENT AND INCIDENTALS NECESSARY TO COMPLETE THE WORK SHALL BE PAID UNDER ITEM 832 TEMPORARY EROSION CONTROL AND APPENDIX F.

ITEM 516 - JACKING AND TEMPORARY SUPPORT OF SUPERSTRUCTURE, AS PER PLAN

THIS WORK CONSISTS OF RAISING OR RE-POSITIONING EXISTING STRUCTURES TO THE DIMENSIONS AND REQUIREMENTS DEFINED IN THE PROJECT PLANS.

SUBMIT CONSTRUCTION PLANS IN ACCORDANCE WITH C&MS 501.05.

IF, DURING THE JACKING OPERATIONS, CRACKING OF THE CONCRETE SUPERSTRUCTURE, SEPARATION OF THE CONCRETE DECK FROM THE STEEL STRINGERS, OR OTHER DAMAGE TO THE STRUCTURE IS VISUALLY OBSERVED, IMMEDIATELY CEASE THE JACKING OPERATION AND INSTALL SUPPORTS TO THE SATISFACTION OF THE ENGINEER. ANALYZE THE DAMAGE AND SUBMIT A METHOD OF CORRECTION TO THE ENGINEER FOR APPROVAL. EPOXY INJECT ALL BEAMS THAT SEPARATE FROM THE DECK FOR THE DISTANCE OF THE SEPARATION IN ACCORDANCE WITH C&MS THE COMMISSION WILL NOT PAY FOR THE COST OF THIS EPOXY INJECTION OR OTHER REQUIRED REPAIRS. THE BRIDGE BEARINGS SHALL BE FULLY SEATED AT ALL CONTACT AREAS. IF FULL SEATING IS NOT ATTAINED, SUBMIT A REPAIR PLAN TO THE ENGINEER. THE COMMISSION WILL NOT PAY FOR THE REPAIR COSTS TO ENSURE FULL SEATING ON BEARINGS.

THE COMMISSION WILL MEASURE THIS WORK ON A LUMP SUM BASIS. THE COMMISSION WILL PAY FOR THE ACCEPTED QUANTITIES AT THE CONTRACT PRICE FOR ITEM 516, JACKING AND TEMPORARY SUPPORT OF SUPERSTRUCTURE, AS PER PLAN.

COPP ROAD BRIDGE TO BE RAISED 1'-1 7/16"

NORTHWEST/SOUTHWEST ROAD BRIDGE TO BE RAISED 7"

STATE ROUTE 269 BRIDGE TO BE RAISED 10"

DEYO ROAD BRIDGE TO BE RAISED 6⅛"

ASBESTOS

AN ASBESTOS SURVEY OF THE FOUR BRIDGES DETERMINED THAT NO ASBESTOS IS PRESENT.

DESIGNED	CHECKED	NO.	REVISIONS	BY	DATE
JDH	EIW	2	REVISED NOTE	JB	10/11/23
DRAWN	IN CHARGE	-	-	-	-
MJD	SMK	-	-	-	-

DESIGN AGENCY
OSBORN ENGINEERING
1111 Superior Avenue - Suite 2100 | Cleveland, OH 44114 (216)481-6200
www.osborn-eng.com
1201 East Market Street - Suite 200 | Akron, OH 44305 (330)535-5132

OHIO TURNPIKE

STRUCTURE GENERAL NOTES
M.P. 104.3, 106.1, 106.8, 107.5
SANDUSKY AND ERIE COUNTIES

PROJECT 43-24-05
DATE: 06/30/23

25
141

OHIO TURNPIKE AND INFRASTRUCTURE COMMISSION

Structure General Notes.dwg; 10/11/23 - 2:59pm

MP 104.3 - Cross Sections.dwg; 10/11/23 - 3:10pm

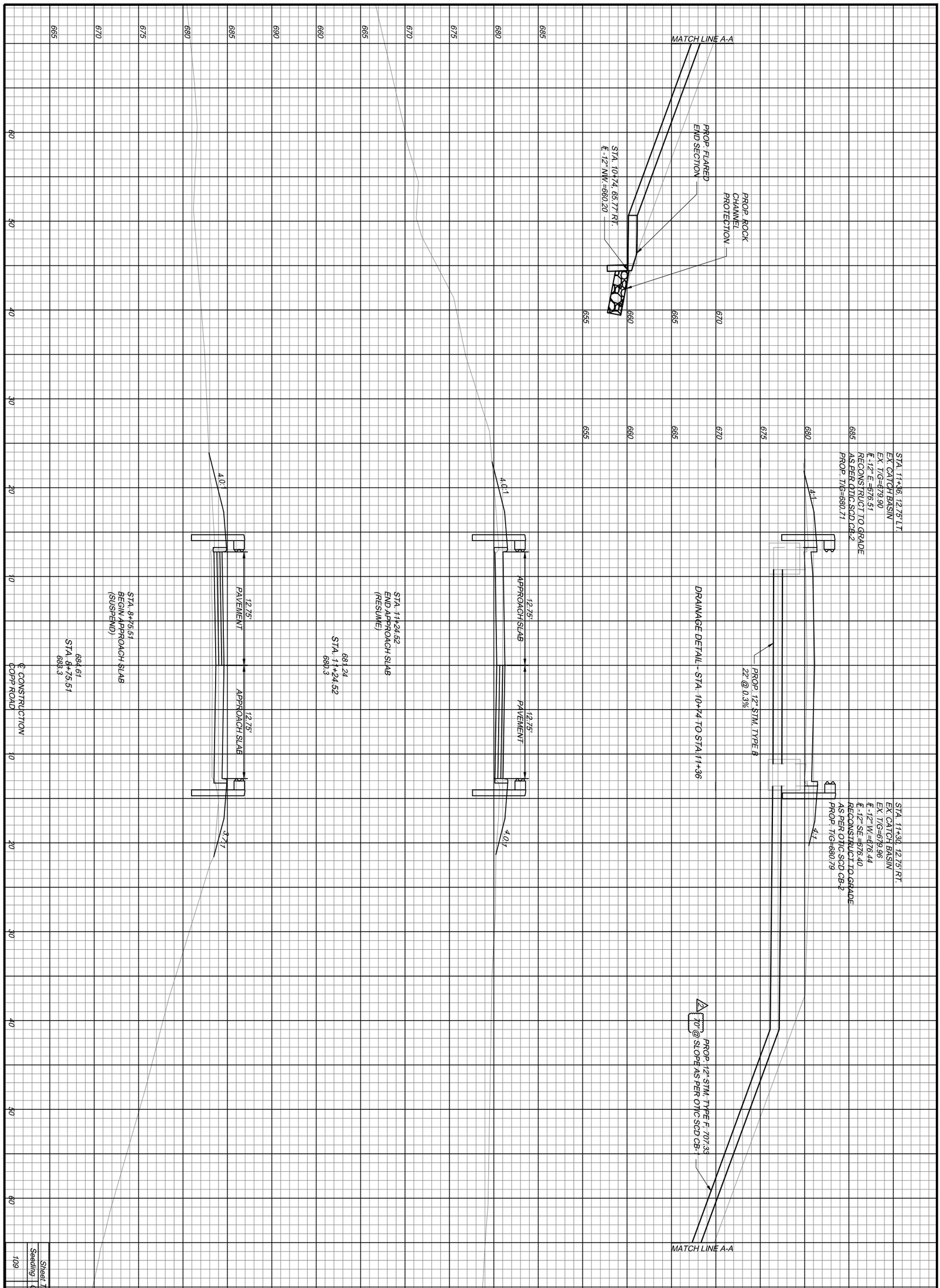

Sheet Totals	
Seeding	109
Cut	5
Fill	24

29
141

PROJECT 43-24-05

DATE: 06/30/23

COPP ROAD CROSS SECTIONS
COPP ROAD OVER OHIO TURNPIKE

M.P. 104.3

SANDUSKY COUNTY

DESIGNED	CHECKED
DRP	DCA
DRAWN	IN CHARGE
DRP	SMK

NO.	REVISIONS	BY	DATE
2	REVISE STORM SEWER LENGTH	DRP	10/11/23
-	-	-	-
-	-	-	-

DESIGN AGENCY
OSBORN ENGINEERING
1111 Superior Avenue • Suite 2100 | Cleveland, OH 44114 (216)-861-2020 www.osborn-eng.com
1201 East Market Street • Suite 200 | Akron, OH 44305 (330)-535-3132

OHIO TURNPIKE

OHIO TURNPIKE AND INFRASTRUCTURE COMMISSION

OHIO TURNPIKE

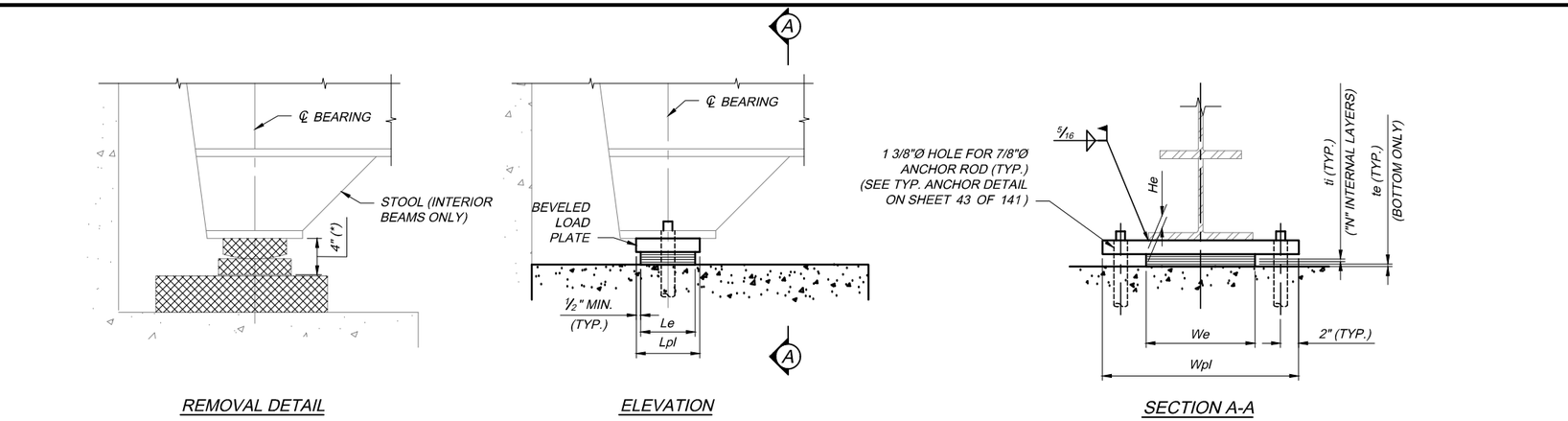

BEARING DETAIL A - ABUTMENT (FIXED)

(INTERIOR BEAMS SHOWN; FASCIA BEAMS SIMILAR)

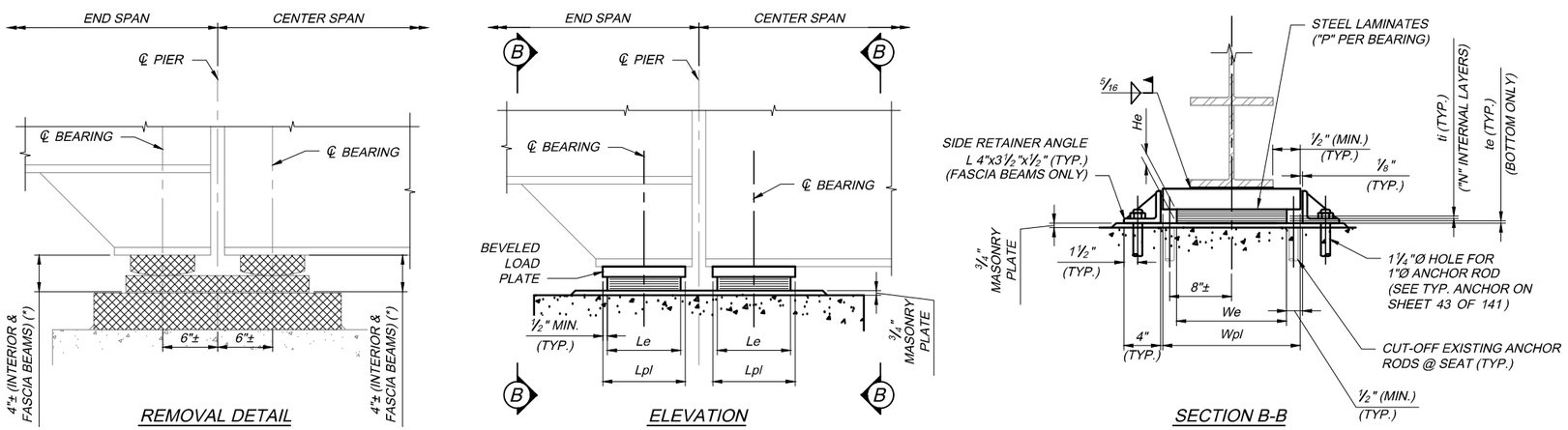

BEARING DETAIL B - PIER 1 & 3 (EXPANSION)

(INTERIOR BEAMS SHOWN; FASCIA BEAMS SIMILAR)

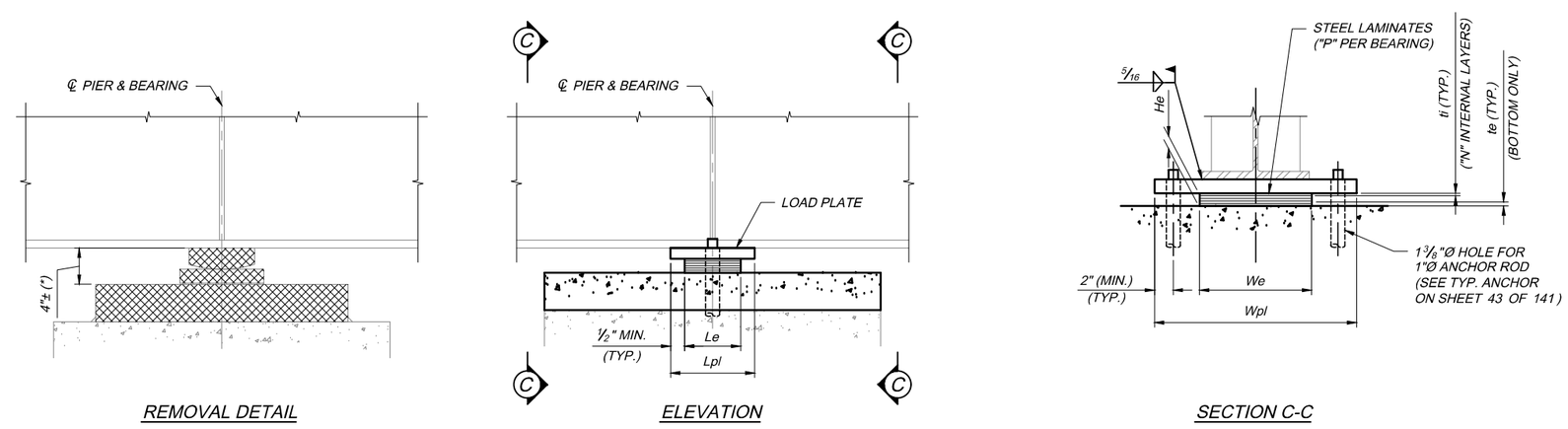

BEARING DETAIL C - PIER 2 (FIXED)

(INTERIOR BEAMS SHOWN; FASCIA BEAMS SIMILAR)

NOTES

1. ELASTOMERIC BEARINGS: THE BEARINGS HAVE BEEN DESIGNED UNDER DIVISION I, SECTION 14.6.6, METHOD A, OF THE AASHTO STANDARD SPECIFICATIONS FOR HIGHWAY BRIDGES. ELASTOMERIC BEARINGS SHALL COMPLY WITH ODOT CMS ITEM 516 AND SECTION 18, BEARINGS, DIVISION II, CONSTRUCTION OF THE AASHTO STANDARD SPECIFICATIONS FOR HIGHWAY BRIDGES. BEARINGS SHALL BE GRADE 3, 50 DUROMETER ELASTOMER AND SHALL BE SUBJECTED TO THE LOAD TESTING REQUIREMENTS CORRESPONDING TO DESIGN METHOD A. THE TESTING SHALL BE INCLUDED IN THE PRICE BID FOR THE BEARINGS. THE MANUFACTURER SHALL FURNISH CERTIFIED TEST DATA. THE MANUFACTURER SHALL SUPPLY A SAMPLE BEARING OF EACH DESIGN, AS SHOWN IN THE PLANS, FOR DESTRUCTIVE TESTING AND APPROVAL PURPOSES. SAMPLE BEARINGS SHALL NOT BE PAID FOR DIRECTLY BUT SHALL BE CONSIDERED INCIDENTAL TO THE ITEM.
2. WELDING SHALL BE CONTROLLED SO THAT THE PLATE TEMPERATURE AT THE ELASTOMER BONDED SURFACE DOES NOT EXCEED 300°F AS DETERMINED BY USE OF PYROMETRIC STICKS OR OTHER TEMPERATURE MONITORING DEVICES.
3. BEARING REPOSITIONING: IF THE BEARINGS ARE SET AT AN AMBIENT TEMPERATURE HIGHER THAN 80°F OR LOWER THAN 40°F AND THE BEARING SHEAR DEFLECTION EXCEEDS ⅛ OF THE BEARING HEIGHT AT 60°F ± 10°F, THE GIRDERS SHALL BE RAISED TO ALLOW THE BEARINGS TO RETURN TO THEIR UNDEFORMED SHAPE AT 60°F ± 10°F.
4. THE STEEL LOAD PLATE AND SIDE RETAINER ANGLES SHALL BE ASTM A709 GRADE 50 STEEL AND SHALL BE PAINTED IN ACCORDANCE WITH SP 514A. ANY DAMAGE TO THE EXISTING STEEL COATING SYSTEM AS A RESULT OF THE WORK NEEDED TO REPLACE THE BEARINGS SHALL BE PAINTED IN ACCORDANCE WITH SP 514A. PAINTING SHALL NOT BE PAID FOR DIRECTLY, BUT SHALL BE CONSIDERED INCIDENTAL TO THE ITEM. (2)
5. THE STEEL LOAD PLATE SHALL BE BONDED BY VULCANIZATION TO THE ELASTOMER DURING THE MOLDING PROCESS.
6. BASIS OF PAYMENT: THE UNIT BID PRICE SHALL INCLUDE ALL MATERIALS, LABOR AND INCIDENTALS NECESSARY TO FURNISH AND INSTALL LAMINATED ELASTOMERIC BEARINGS. SAMPLE BEARINGS SHALL NOT BE MEASURED FOR PAYMENT.
7. ANCHOR BOLTS AND RODS SHALL BE PLACED AS PER ODOT CMS 510. PAYMENT FOR DOWEL HOLES AND ANCHOR RODS SHALL BE INCLUDED WITH ITEM SP 516.
8. ALL BEARINGS SHALL BE MARKED PRIOR TO SHIPPING. THE MARKS SHALL INDICATE THE BEARING LOCATION ON THE BRIDGE AND A DIRECTION ARROW THAT POINTS UP STATION. ALL MARKS SHALL BE PERMANENT AND BE VISIBLE AFTER THE BEARING IS INSTALLED.
9. THE CONTRACTOR SHALL FURNISH SHIM PLATES WITH EACH BEARING DEVICE . INCLUDE STEEL SHIMS WITH ITEM SP 516 FOR PAYMENT. INCLUDE SHIM PACK WITH BEARINGS DELIVERED TO THE SITE FOR FINAL FIELD ADJUSTMENTS.
10. SUPERSTRUCTURE SUPPORT, AND/OR JACKING AND RESETTING OF BEARINGS AS DIRECTED BY THE ENGINEER SHALL BE PERFORMED IN ACCORDANCE WITH ITEM 516 AND SP 516G. SEE STRUCTURE NOTES AND SPECIAL PROVISIONS.
11. SEE SHEET 43 OF 141 FOR ADDITIONAL BEARING DETAILS.
14. COST OF ANCHOR, NON-SHRINKING & NON-METALLIC GROUT SHALL BE INCLUDED WITH ITEM SP 516G & SP 516J.

LEGEND

DENOTES PORTIONS OF BEARINGS TO BE REMOVED (INCLUDE WITH ITEM SP 202 FOR PAYMENT)

(*) CONTRACTOR SHALL VERIFY EXISTING HEIGHT PRIOR TO FABRICATION OF NEW BEARINGS, PEDESTALS AND LOAD PLATES. SEE NOTE 10 & 11.

DESIGN AGENCY
OSBORN ENGINEERING
1111 Superior Avenue - Suite 2100 | Cleveland, OH 44114 (216)861-0200
www.osborneng.com
1201 East Market Street - Suite 200 | Akron, OH 44305 (330)535-5132

NO.	REVISIONS	BY	DATE
2	REVISED NOTE	JB	10/11/23
-	-	-	-
-	-	-	-

DESIGNED	CHECKED
JDH	EIW
DRAWN	IN CHARGE
MJD	SMK

COPP ROAD BEARING DETAILS
COPP ROAD OVER OHIO TURNPIKE
SANDUSKY COUNTY
M.P. 104.3

PROJECT 43-24-05
DATE: 06/30/23

12/16

42/141

OHIO TURNPIKE AND INFRASTRUCTURE COMMISSION

MP 104.3 - Bearings.dwg; 10/11/23 - 3:13pm

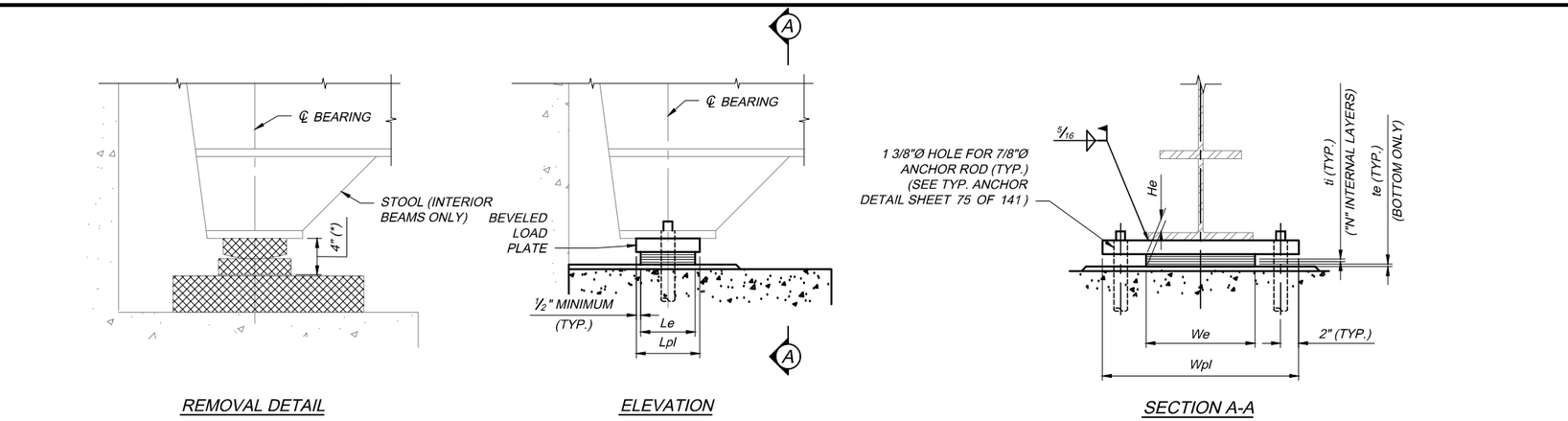

REMOVAL DETAIL

ELEVATION

SECTION A-A

BEARING DETAIL A - ABUTMENT (FIXED)

(INTERIOR BEAMS SHOWN; FASCIA BEAMS SIMILAR)

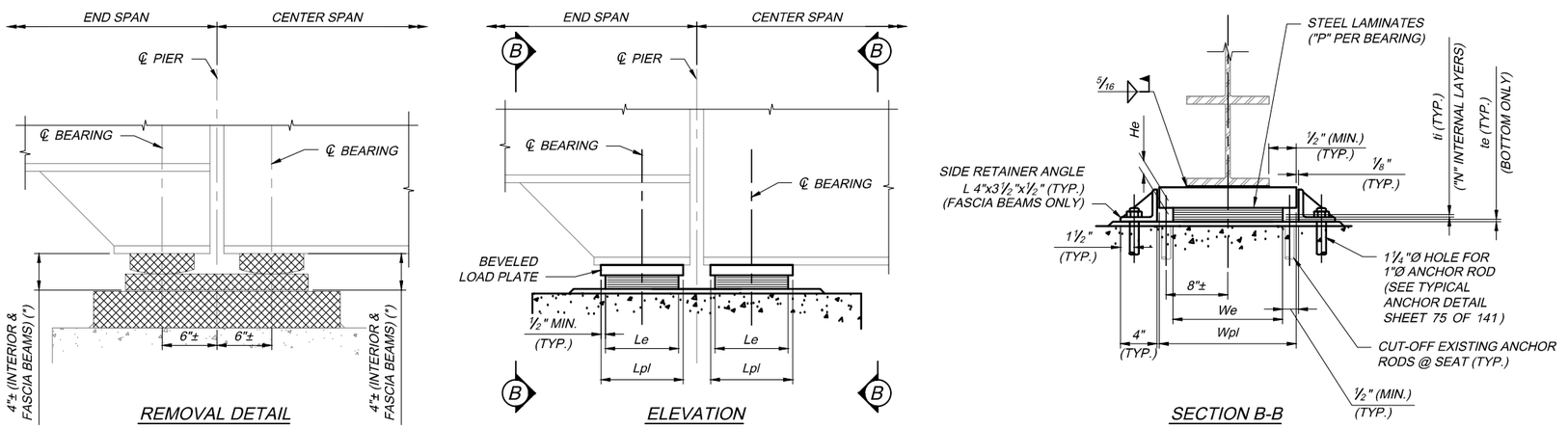

REMOVAL DETAIL

ELEVATION

SECTION B-B

BEARING DETAIL B - PIER 1 & 3 (EXPANSION)

(INTERIOR BEAMS SHOWN; FASCIA BEAMS SIMILAR)

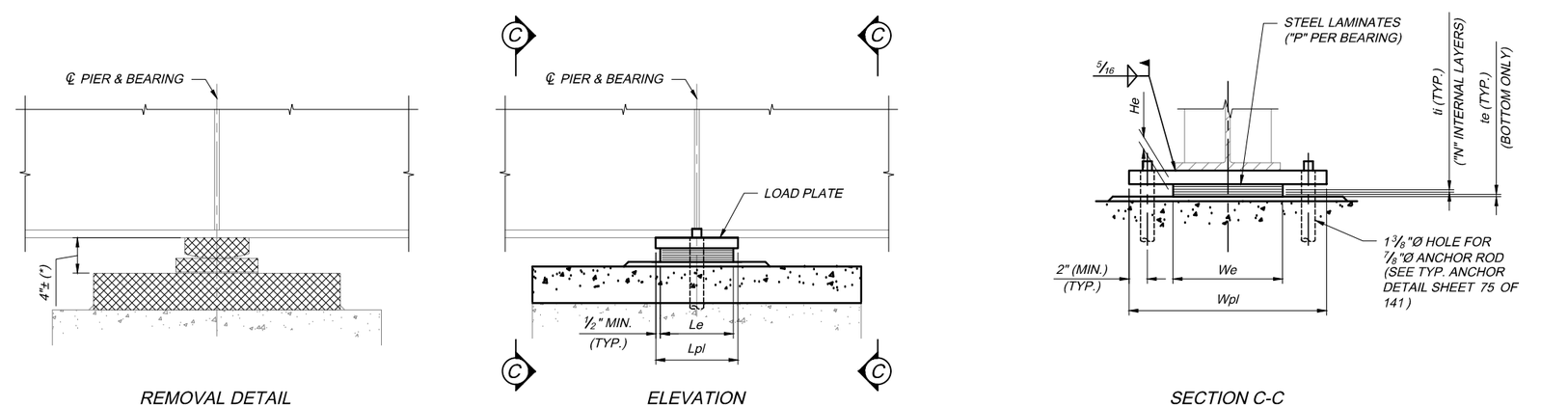

REMOVAL DETAIL

ELEVATION

SECTION C-C

BEARING DETAIL C - PIER 2 (FIXED)

(INTERIOR BEAMS SHOWN; FASCIA BEAMS SIMILAR)

NOTES

1. ELASTOMERIC BEARINGS: THE BEARINGS HAVE BEEN DESIGNED UNDER DIVISION I, SECTION 14.6.6, METHOD A, OF THE AASHTO STANDARD SPECIFICATIONS FOR HIGHWAY BRIDGES. ELASTOMERIC BEARINGS SHALL COMPLY WITH ODOT CMS ITEM 516 AND SECTION 18, BEARINGS, DIVISION II, CONSTRUCTION OF THE AASHTO STANDARD SPECIFICATIONS FOR HIGHWAY BRIDGES. BEARINGS SHALL BE GRADE 3, 50 DUROMETER ELASTOMER AND SHALL BE SUBJECTED TO THE LOAD TESTING REQUIREMENTS CORRESPONDING TO DESIGN METHOD A. THE TESTING SHALL BE INCLUDED IN THE PRICE BID FOR THE BEARINGS. THE MANUFACTURER SHALL FURNISH CERTIFIED TEST DATA. THE MANUFACTURER SHALL SUPPLY A SAMPLE BEARING OF EACH DESIGN, AS SHOWN IN THE PLANS, FOR DESTRUCTIVE TESTING AND APPROVAL PURPOSES. SAMPLE BEARINGS SHALL NOT BE PAID FOR DIRECTLY BUT SHALL BE CONSIDERED INCIDENTAL TO THE ITEM.
2. WELDING SHALL BE CONTROLLED SO THAT THE PLATE TEMPERATURE AT THE ELASTOMER BONDED SURFACE DOES NOT EXCEED 300°F AS DETERMINED BY USE OF PYROMETRIC STICKS OR OTHER TEMPERATURE MONITORING DEVICES.
3. BEARING REPOSITIONING: IF THE BEARINGS ARE SET AT AN AMBIENT TEMPERATURE HIGHER THAN 80°F OR LOWER THAN 40°F AND THE BEARING SHEAR DEFLECTION EXCEEDS ⅛ OF THE BEARING HEIGHT AT 60°F ± 10°F, THE GIRDERS SHALL BE RAISED TO ALLOW THE BEARINGS TO RETURN TO THEIR UNDEFORMED SHAPE AT 60°F ± 10°F.
4. THE STEEL LOAD PLATE AND SIDE RETAINER ANGLES SHALL BE ASTM A709 GRADE 50 STEEL AND SHALL BE PAINTED IN ACCORDANCE WITH SP 514A. ANY DAMAGE TO THE EXISTING STEEL COATING SYSTEM AS A RESULT OF THE WORK NEEDED TO REPLACE THE BEARINGS SHALL BE PAINTED IN ACCORDANCE WITH SP 514A. PAINTING SHALL NOT BE PAID FOR DIRECTLY, BUT SHALL BE CONSIDERED INCIDENTAL TO THE ITEM. (2)
5. THE STEEL LOAD PLATE SHALL BE BONDED BY VULCANIZATION TO THE ELASTOMER DURING THE MOLDING PROCESS.
6. BASIS OF PAYMENT: THE UNIT BID PRICE SHALL INCLUDE ALL MATERIALS, LABOR AND INCIDENTALS NECESSARY TO FURNISH AND INSTALL LAMINATED ELASTOMERIC BEARINGS. SAMPLE BEARINGS SHALL NOT BE MEASURED FOR PAYMENT.
7. ANCHOR BOLTS AND RODS SHALL BE PLACED AS PER ODOT CMS 510. PAYMENT FOR DOWEL HOLES AND ANCHOR RODS SHALL BE INCLUDED WITH ITEM SP 516.
8. ALL BEARINGS SHALL BE MARKED PRIOR TO SHIPPING. THE MARKS SHALL INDICATE THE BEARING LOCATION ON THE BRIDGE AND A DIRECTION ARROW THAT POINTS UP STATION. ALL MARKS SHALL BE PERMANENT AND BE VISIBLE AFTER THE BEARING IS INSTALLED.
9. THE CONTRACTOR SHALL FURNISH SHIM PLATES WITH EACH BEARING DEVICE . INCLUDE STEEL SHIMS WITH ITEM SP 516 FOR PAYMENT. INCLUDE SHIM PACK WITH BEARINGS DELIVERED TO THE SITE FOR FINAL FIELD ADJUSTMENTS.
10. SUPERSTRUCTURE SUPPORT, AND/OR JACKING AND RESETTING OF BEARINGS AS DIRECTED BY THE ENGINEER SHALL BE PERFORMED IN ACCORDANCE WITH ITEM 516 AND SP 516G. SEE STRUCTURE NOTES AND SPECIAL PROVISIONS.
11. SEE SHEET 75 OF 141 FOR ADDITIONAL BEARING DETAILS.
14. COST OF ANCHOR, NON-SHRINKING & NON-METALLIC GROUT SHALL BE INCLUDED WITH ITEM SP 516G & SP 516J.

LEGEND

DENOTES PORTIONS OF BEARINGS TO BE REMOVED (INCLUDE WITH ITEM SP 202 FOR PAYMENT)

(*) CONTRACTOR SHALL VERIFY EXISTING HEIGHT PRIOR TO FABRICATION OF NEW BEARINGS, PEDESTALS AND LOAD PLATES. SEE NOTE 9.

DESIGN AGENCY
OSBORN ENGINEERING
1111 Superior Avenue - Suite 2100 | Cleveland, OH 44114 (216)861-0200
www.osborneng.com
1201 East Market Street - Suite 200 | Akron, OH 44305 (330)535-5132

REVISIONS			
NO.		BY	DATE
2	REVISED NOTE	JB	10/11/23
-	-	-	-
-	-	-	-

DESIGNED	CHECKED	DESIGN AGENCY
BAH	JDH	OSBORN ENGINEERING
DRAWN	IN CHARGE	
BAH	SMK	

NW SW ROAD BEARING DETAILS
NORTHWEST/SOUTHWEST ROAD OVER OHIO TURNPIKE
M.P. 106.1 SANDUSKY AND ERIE COUNTIES

PROJECT 43-24-05
DATE: 06/30/23

OHIO TURNPIKE AND INFRASTRUCTURE COMMISSION

MP 106.1 - Bearings.dwg; 10/11/23 - 3:23pm

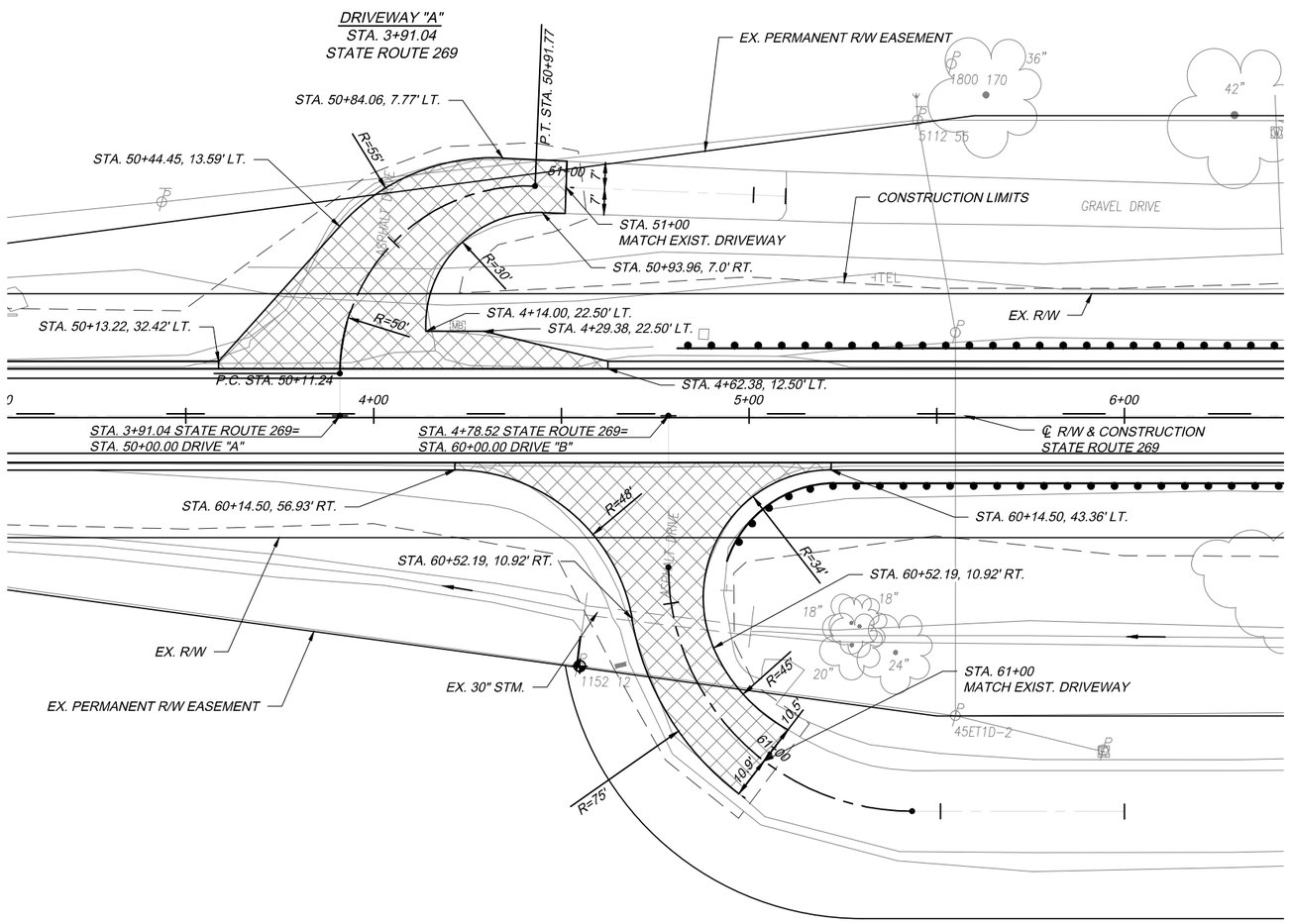

DRIVEWAY "B"
STA. 4+78.52 STATE ROUTE 269

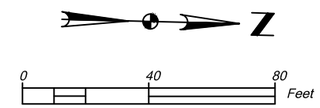

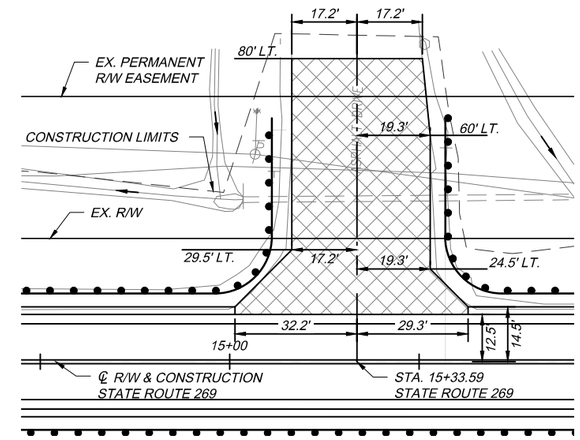

DRIVEWAY "C"
STA. 15+33.59 STATE ROUTE 269
FOR DRIVEWAY PROFILE
SEE SHEET NO. 90

COMMERCIAL ASPHALT DRIVE
TYPICAL SECTION:
ITEM 441, ASPHALT CONCRETE SURFACE COURSE, TYPE 1, 449, (DRIVEWAYS) - 1 1/4"
ITEM 407, TACK COAT
ITEM SP 302, ASPHALT CONCRETE BASE, PG64-22- 5" (2)
ITEM 204, SUBGRADE COMPACTION

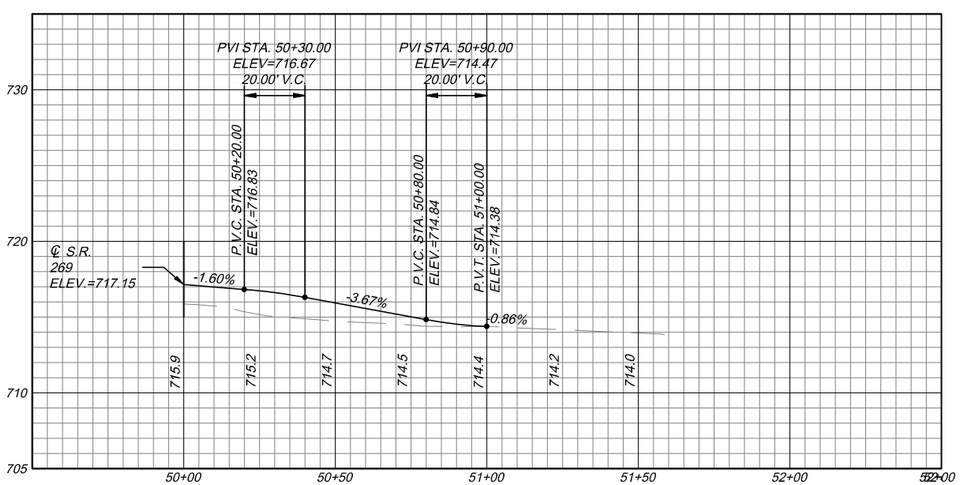

DRIVE A @ STA. 3+91.04, LT. PROFILE

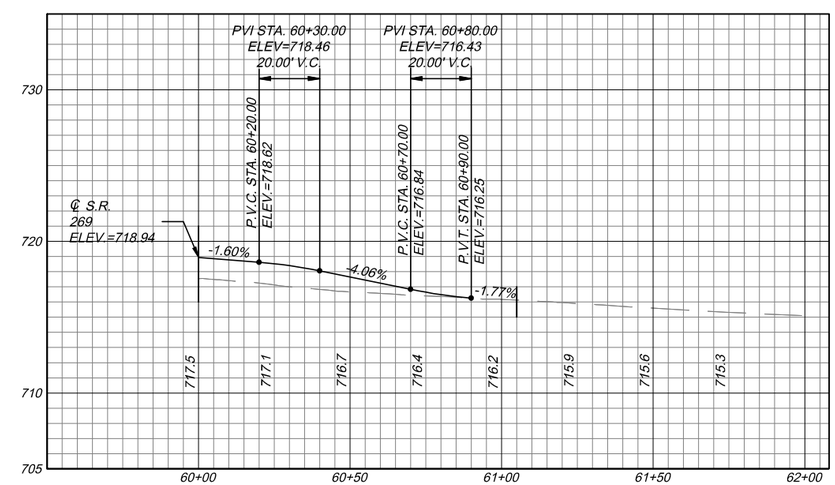

DRIVE B @ STA. 4+78.52, RT. PROFILE

NO.	REVISIONS	BY	DATE
2	REVISE MATERIAL DESCRIPTION	DRP	10/11/23
-	-	-	-
-	-	-	-
-	-	-	-

DESIGNED DRP
DRAWN DRP
CHECKED DCA
IN CHARGE SMK

DESIGN AGENCY
OSBORN ENGINEERING
1111 Superior Avenue - Suite 2100 | Cleveland, OH 44114 (216)481-0200 www.osborn-eng.com
1201 East Market Street - Suite 200 | Akron, OH 44305 (330)535-5132

DRIVEWAY PLANS AND DETAILS
STATE ROUTE 269 OVER OHIO TURNPIKE
ERIE COUNTY
M.P. 106.8

PROJECT 43-24-05
DATE: 06/30/23

94
141

OHIO TURNPIKE AND INFRASTRUCTURE COMMISSION

MP 106.8 - Plan and Profile.dwg; 10/11/23 - 2:14pm

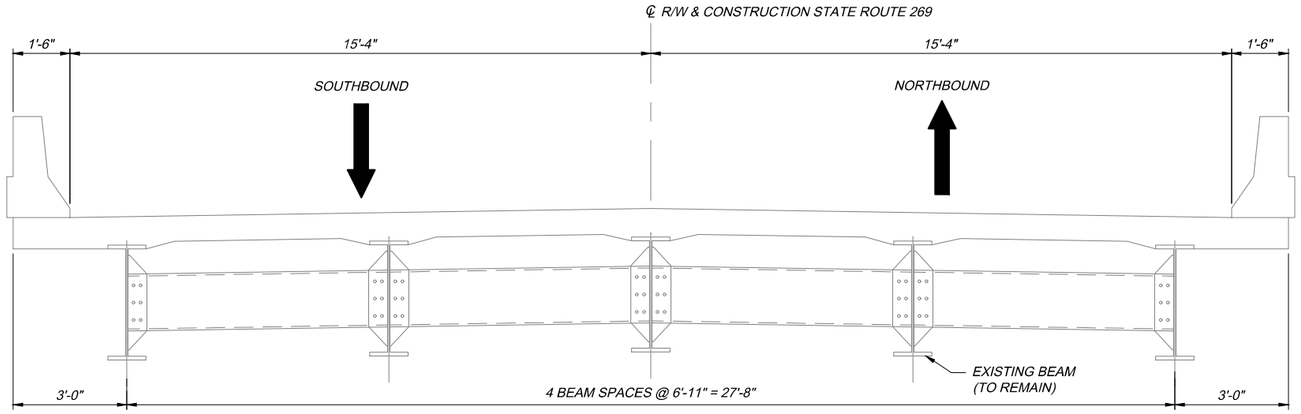

EXISTING SECTION

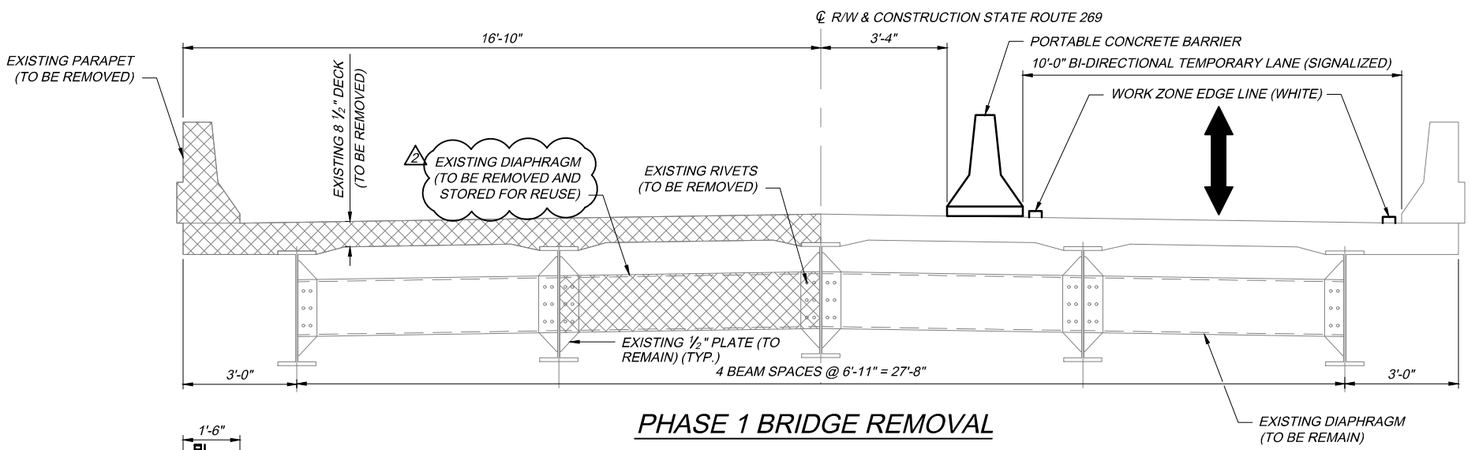

PHASE 1 BRIDGE REMOVAL

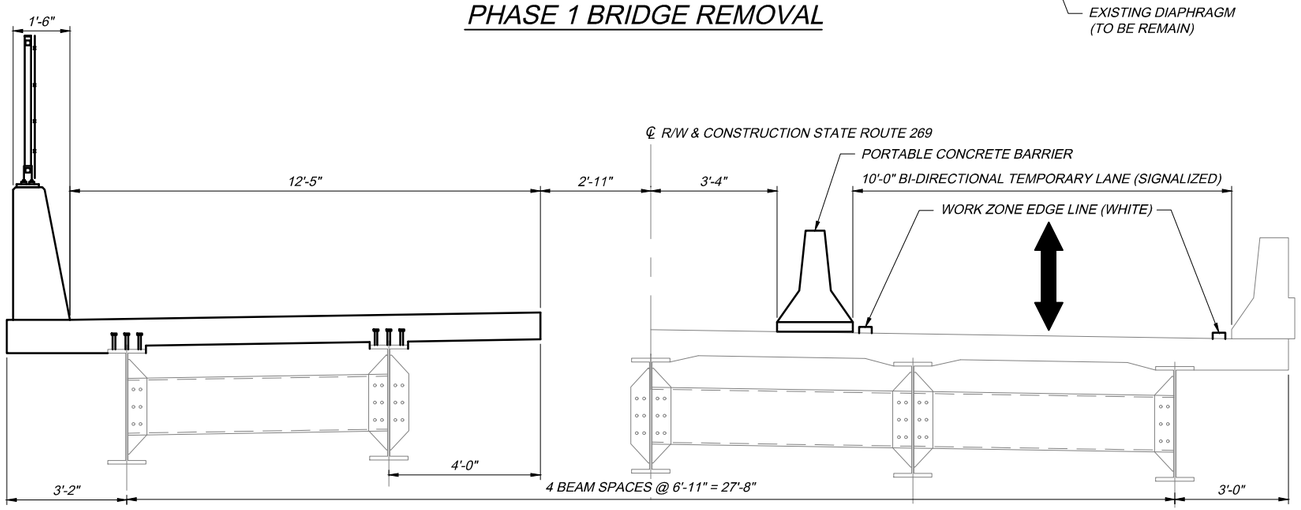

PHASE 1 BRIDGE CONSTRUCTION

LEGEND :

DENOTES PORTIONS OF STRUCTURE TO BE REMOVED AS PER ITEM SP 202

NOTES :

1. PORTABLE BARRIER SHALL BE DELINEATED AS SHOWN ON STANDARD DRAWING TCR-2.

2. THE PROPOSED BRIDGE FENCING SHALL BE INSTALLED ON THE SOUTHBOUND PARAPET PRIOR TO PHASE 2 BEING IMPLEMENTED.

DESIGN AGENCY
OSBORN ENGINEERING
1111 Superior Avenue - Suite 2100 | Cleveland, OH 44114 (216)481-5200 www.osborn-eng.com
1201 East Market Street - Suite 200 | Akron, OH 44305 (330)435-3132

NO.	REVISIONS	BY	DATE
2	REVISED CALL OUT	JB	10/11/23
-	-	-	-
-	-	-	-

DESIGNED	CHECKED	DRAWN	IN CHARGE
MJD	JDH	MJD	SMK

SR 269 PHASE CONSTRUCTION - 1
STATE ROUTE 269 OVER OHIO TURNPIKE
ERIE COUNTY
M.P. 106.8

PROJECT 43-24-05
DATE: 06/30/23

OHIO TURNPIKE AND INFRASTRUCTURE COMMISSION

MP 106.8 - Phase Construction.dwg; 10/11/23 - 3:28pm

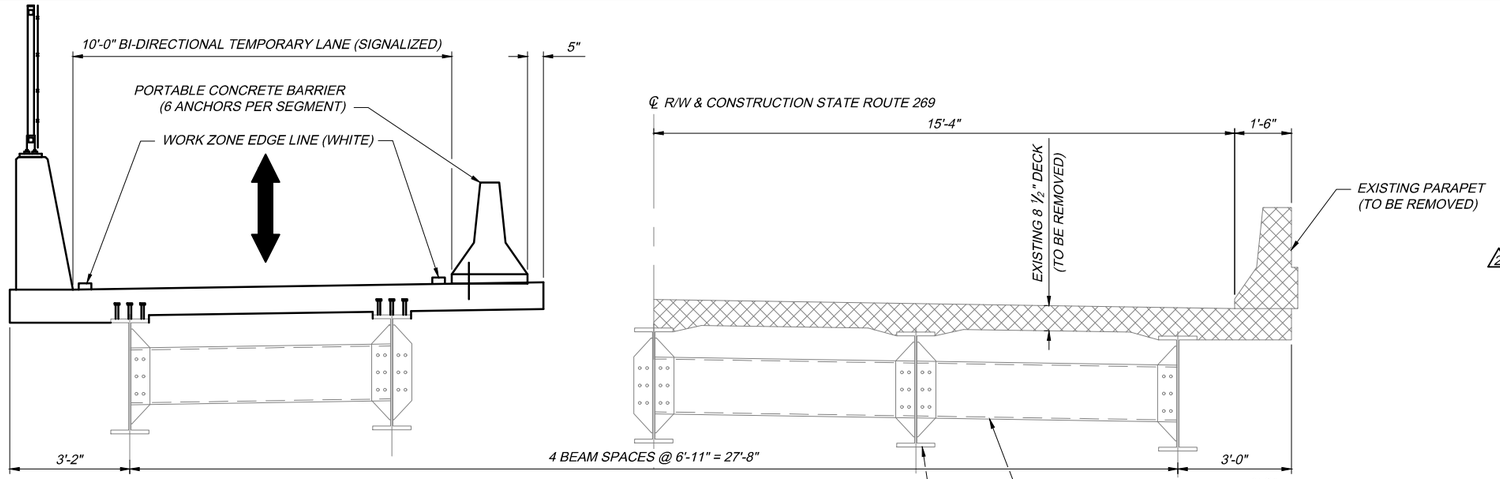

PHASE 2 BRIDGE REMOVAL

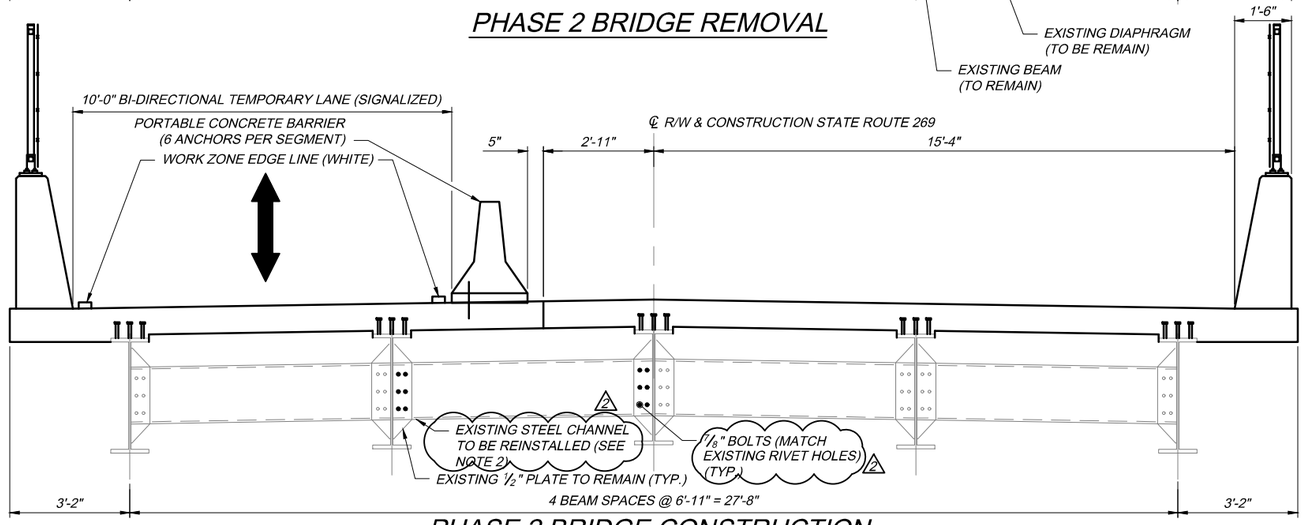

PHASE 2 BRIDGE CONSTRUCTION

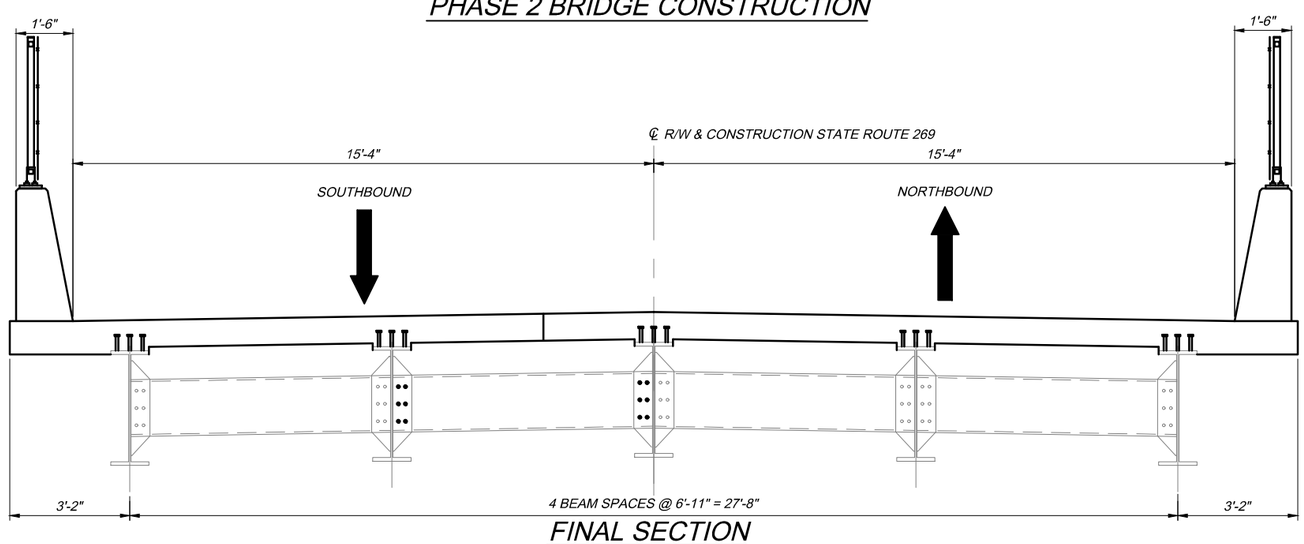

FINAL SECTION

LEGEND :

DENOTES PORTIONS OF STRUCTURE TO BE REMOVED AS PER ITEM SP 202

NOTES :

1. PORTABLE BARRIER SHALL BE DELINEATED AS SHOWN ON STANDARD DRAWING TCR 2.
2. EXISTING STEEL CHANNEL TO BE REINSTALLED IN BAY 2 WITH BOLTS INSTALLED IN A SNUG TIGHT CONDITION PRIOR TO PHASE 2 DECK PLACEMENT. ONCE DECK PLACEMENT IS COMPLETE, THE CONTRACTOR SHALL TIGHTEN THE BOLTS ACCORDING TO C&MS 513.

NO.	REVISIONS	BY	DATE
2	PHASE CONSTRUCTION DETAILS REVISED	JB	10/11/23
-	-	-	-
-	-	-	-

DESIGN AGENCY
OSBORN ENGINEERING
1111 Superior Avenue - Suite 2100 | Cleveland, OH 44114 (216)481-5200 www.osborn-eng.com
1201 East Market Street - Suite 200 | Akron, OH 44305 (330)435-3132

DESIGNED MJD | CHECKED JDH
DRAWN MJD | IN CHARGE SMK

SR 269 PHASE CONSTRUCTION - 2
STATE ROUTE 269 OVER OHIO TURNPIKE
ERIE COUNTY
M.P. 106.8

PROJECT 43-24-05
DATE: 06/30/23

3 / 18

97 / 141

OHIO TURNPIKE AND INFRASTRUCTURE COMMISSION

MP 106.8 - Phase Construction.dwg: 10/11/23 - 3:33pm

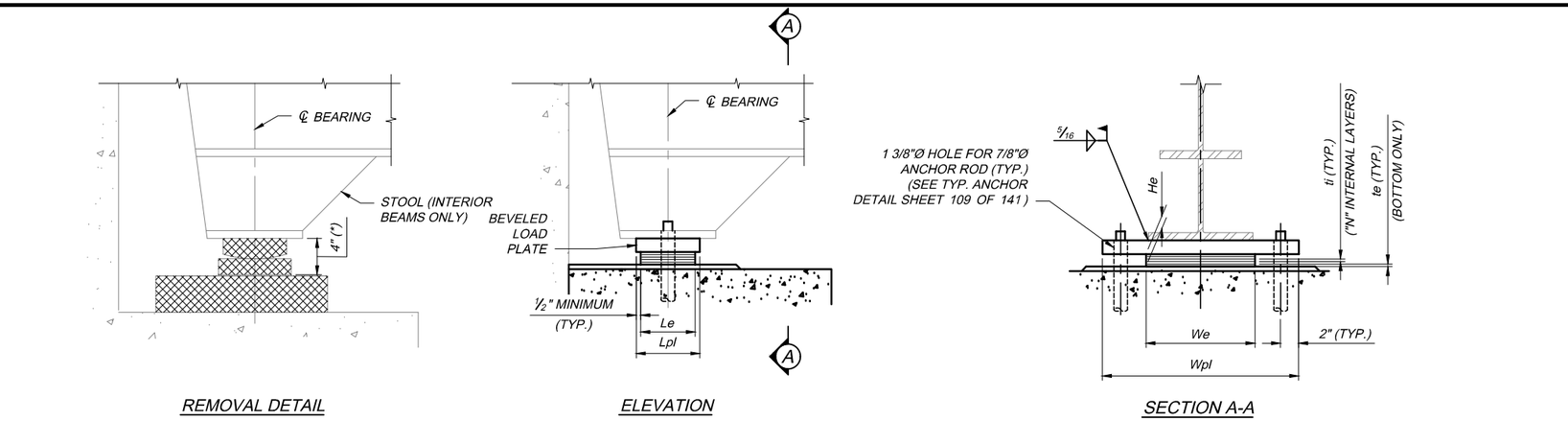

REMOVAL DETAIL

ELEVATION

SECTION A-A

BEARING DETAIL A - ABUTMENT (FIXED)

(INTERIOR BEAMS SHOWN; FASCIA BEAMS SIMILAR)

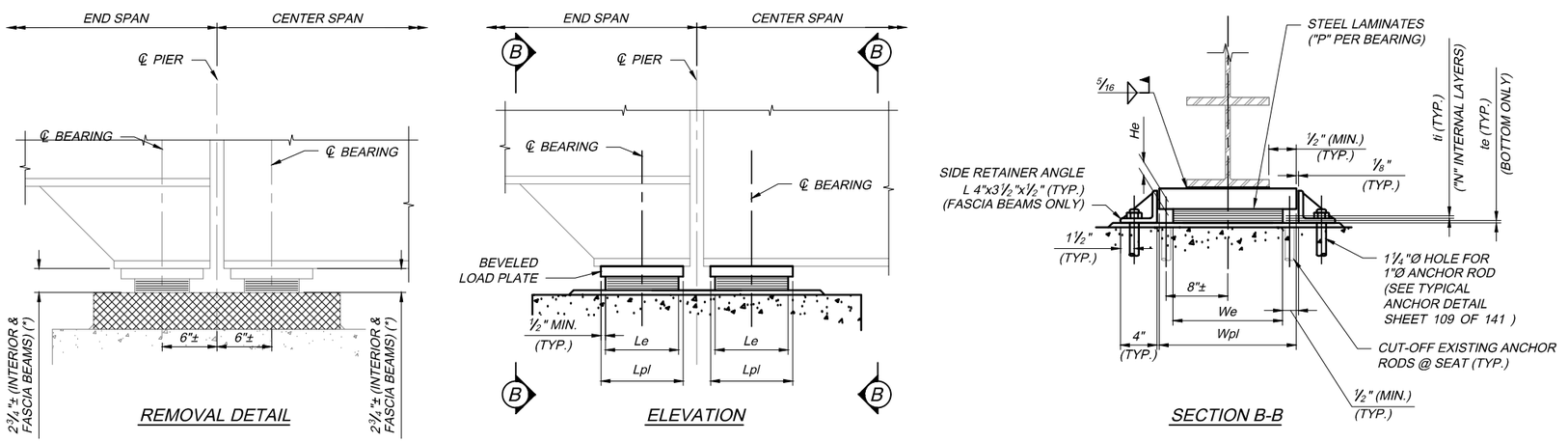

REMOVAL DETAIL

ELEVATION

SECTION B-B

BEARING DETAIL B - PIER 1 & 3 (EXPANSION)

(INTERIOR BEAMS SHOWN; FASCIA BEAMS SIMILAR)

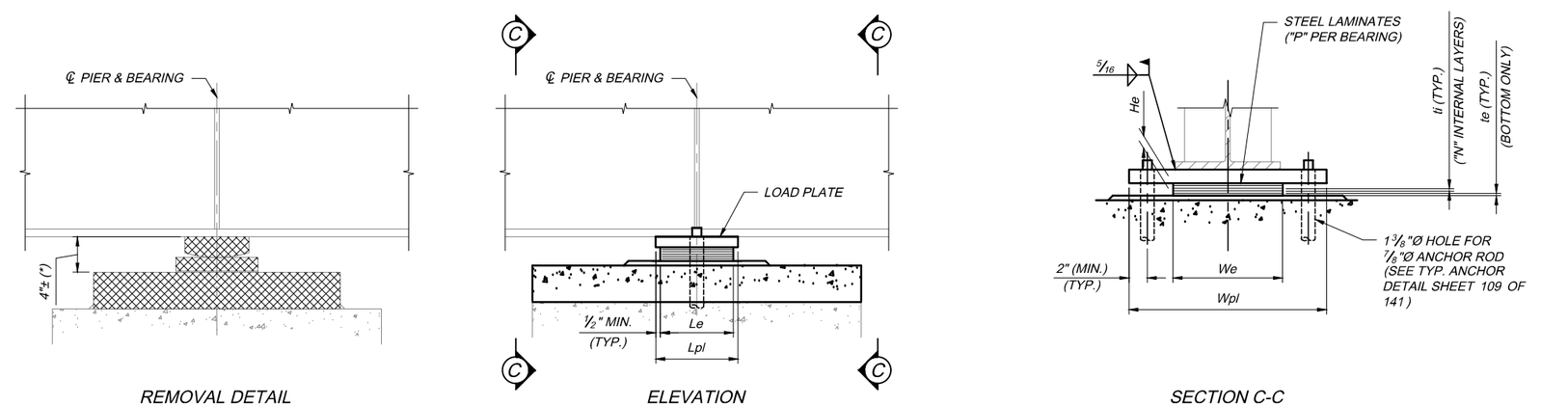

REMOVAL DETAIL

ELEVATION

SECTION C-C

BEARING DETAIL C - PIER 2 (FIXED)

(INTERIOR BEAMS SHOWN; FASCIA BEAMS SIMILAR)

NOTES

1. ELASTOMERIC BEARINGS: THE BEARINGS HAVE BEEN DESIGNED UNDER DIVISION I, SECTION 14.6.6, METHOD A, OF THE AASHTO STANDARD SPECIFICATIONS FOR HIGHWAY BRIDGES. ELASTOMERIC BEARINGS SHALL COMPLY WITH ODOT CMS ITEM 516 AND SECTION 18, BEARINGS, DIVISION II, CONSTRUCTION OF THE AASHTO STANDARD SPECIFICATIONS FOR HIGHWAY BRIDGES. BEARINGS SHALL BE GRADE 3, 50 DUROMETER ELASTOMER AND SHALL BE SUBJECTED TO THE LOAD TESTING REQUIREMENTS CORRESPONDING TO DESIGN METHOD A. THE TESTING SHALL BE INCLUDED IN THE PRICE BID FOR THE BEARINGS. THE MANUFACTURER SHALL FURNISH CERTIFIED TEST DATA. THE MANUFACTURER SHALL SUPPLY A SAMPLE BEARING OF EACH DESIGN, AS SHOWN IN THE PLANS, FOR DESTRUCTIVE TESTING AND APPROVAL PURPOSES. SAMPLE BEARINGS SHALL NOT BE PAID FOR DIRECTLY BUT SHALL BE CONSIDERED INCIDENTAL TO THE ITEM.

2. WELDING SHALL BE CONTROLLED SO THAT THE PLATE TEMPERATURE AT THE ELASTOMER BONDED SURFACE DOES NOT EXCEED 300°F AS DETERMINED BY USE OF PYROMETRIC STICKS OR OTHER TEMPERATURE MONITORING DEVICES.

3. BEARING REPOSITIONING: IF THE BEARINGS ARE SET AT AN AMBIENT TEMPERATURE HIGHER THAN 80°F OR LOWER THAN 40°F AND THE BEARING SHEAR DEFLECTION EXCEEDS ⅛ OF THE BEARING HEIGHT AT 60°F ± 10°F, THE GIRDERS SHALL BE RAISED TO ALLOW THE BEARINGS TO RETURN TO THEIR UNDEFORMED SHAPE AT 60°F ± 10°F.

2 4. THE STEEL LOAD PLATE AND SIDE RETAINER ANGLES SHALL BE ASTM A709 GRADE 50 STEEL AND SHALL BE PAINTED IN ACCORDANCE WITH SP 514A. ANY DAMAGE TO THE EXISTING STEEL COATING SYSTEM AS A RESULT OF THE WORK NEEDED TO REPLACE THE BEARINGS SHALL BE PAINTED IN ACCORDANCE WITH SP 514A. PAINTING SHALL NOT BE PAID FOR DIRECTLY, BUT SHALL BE CONSIDERED INCIDENTAL TO THE ITEM.

5. THE STEEL LOAD PLATE SHALL BE BONDED BY VULCANIZATION TO THE ELASTOMER DURING THE MOLDING PROCESS.

6. BASIS OF PAYMENT: THE UNIT BID PRICE SHALL INCLUDE ALL MATERIALS, LABOR AND INCIDENTALS NECESSARY TO FURNISH AND INSTALL LAMINATED ELASTOMERIC BEARINGS. SAMPLE BEARINGS SHALL NOT BE MEASURED FOR PAYMENT.

7. ANCHOR BOLTS AND RODS SHALL BE PLACED AS PER ODOT CMS 510. PAYMENT FOR DOWEL HOLES AND ANCHOR RODS SHALL BE INCLUDED WITH ITEM SP 516.

8. ALL BEARINGS SHALL BE MARKED PRIOR TO SHIPPING. THE MARKS SHALL INDICATE THE BEARING LOCATION ON THE BRIDGE AND A DIRECTION ARROW THAT POINTS UP STATION. ALL MARKS SHALL BE PERMANENT AND BE VISIBLE AFTER THE BEARING IS INSTALLED.

9. THE CONTRACTOR SHALL FURNISH SHIM PLATES WITH EACH BEARING DEVICE. INCLUDE STEEL SHIMS WITH ITEM SP 516 FOR PAYMENT. INCLUDE SHIM PACK WITH BEARINGS DELIVERED TO THE SITE FOR FINAL FIELD ADJUSTMENTS.

10. SUPERSTRUCTURE SUPPORT, AND/OR JACKING AND RESETTING OF BEARINGS AS DIRECTED BY THE ENGINEER SHALL BE PERFORMED IN ACCORDANCE WITH ITEM 516 AND SP 516G. SEE STRUCTURE NOTES AND SPECIAL PROVISIONS.

11. SEE SHEET 109 OF 141 FOR ADDITIONAL BEARING DETAILS.

14. COST OF ANCHOR, NON-SHRINKING & NON-METALLIC GROUT SHALL BE INCLUDED WITH ITEM SP 516G & SP 516J.

LEGEND

DENOTES PORTIONS OF BEARINGS TO BE REMOVED (INCLUDE WITH ITEM SP 202 FOR PAYMENT)

(*) CONTRACTOR SHALL VERIFY EXISTING HEIGHT PRIOR TO FABRICATION OF NEW BEARINGS, PEDESTALS AND LOAD PLATES. SEE NOTE 9.

DESIGN AGENCY
OSBORN ENGINEERING
1111 Superior Avenue - Suite 2100 | Cleveland, OH 44114 (216)861-0200 www.osborneng.com
1201 East Market Street - Suite 200 | Akron, OH 44305 (330)535-5132

NO.	REVISIONS	BY	DATE
2	REVISED NOTE	JB	10/11/23
-	-	-	-
-	-	-	-

DESIGNED	CHECKED	DRAWN	IN CHARGE
MJD	JDH	MJD	SMK

SR 269 BEARING DETAILS
STATE ROUTE 269 OVER OHIO TURNPIKE
M.P. 106.8 ERIE COUNTY

PROJECT 43-24-05
DATE: 06/30/23

OHIO TURNPIKE AND INFRASTRUCTURE COMMISSION

MP 106.8 - Bearings.dwg; 10/11/23 - 3:35pm

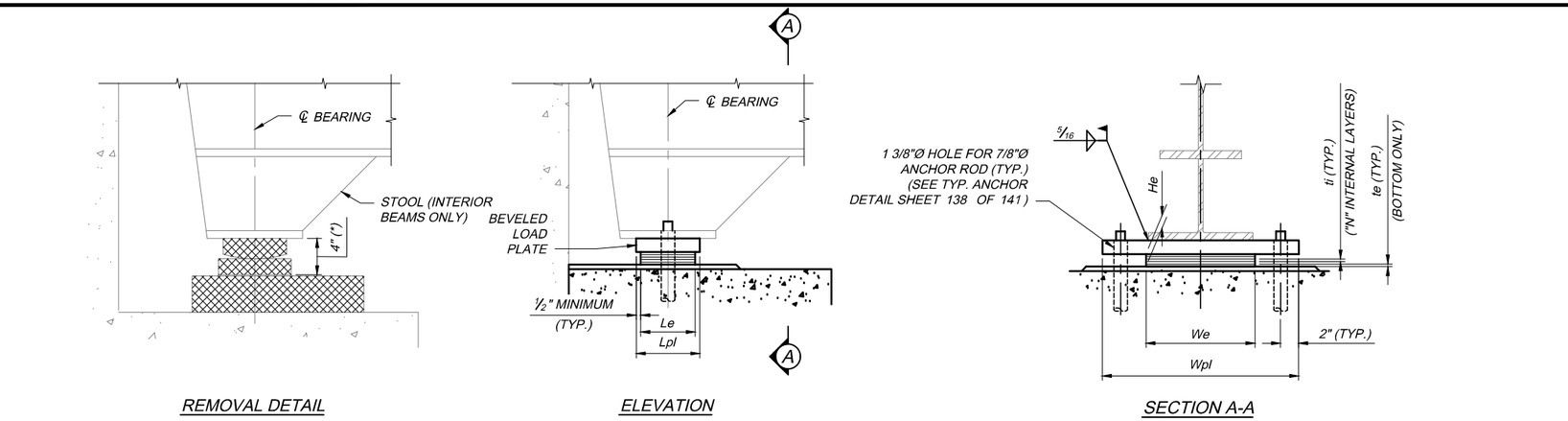

REMOVAL DETAIL

ELEVATION

SECTION A-A

BEARING DETAIL A - ABUTMENT (FIXED)

(INTERIOR BEAMS SHOWN; FASCIA BEAMS SIMILAR)

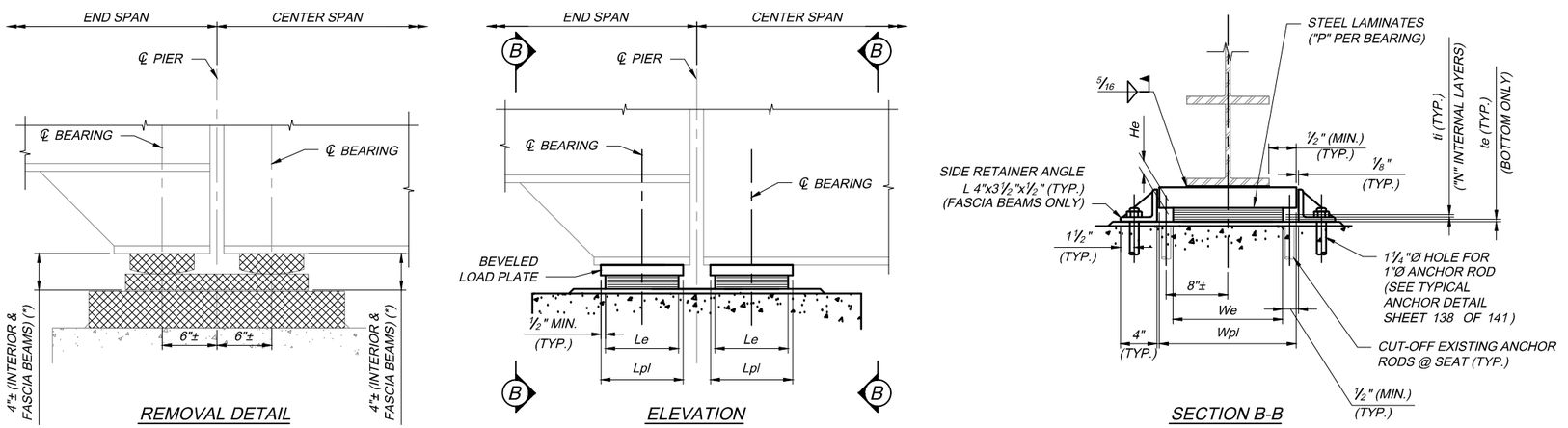

REMOVAL DETAIL

ELEVATION

SECTION B-B

BEARING DETAIL B - PIER 1 & 3 (EXPANSION)

(INTERIOR BEAMS SHOWN; FASCIA BEAMS SIMILAR)

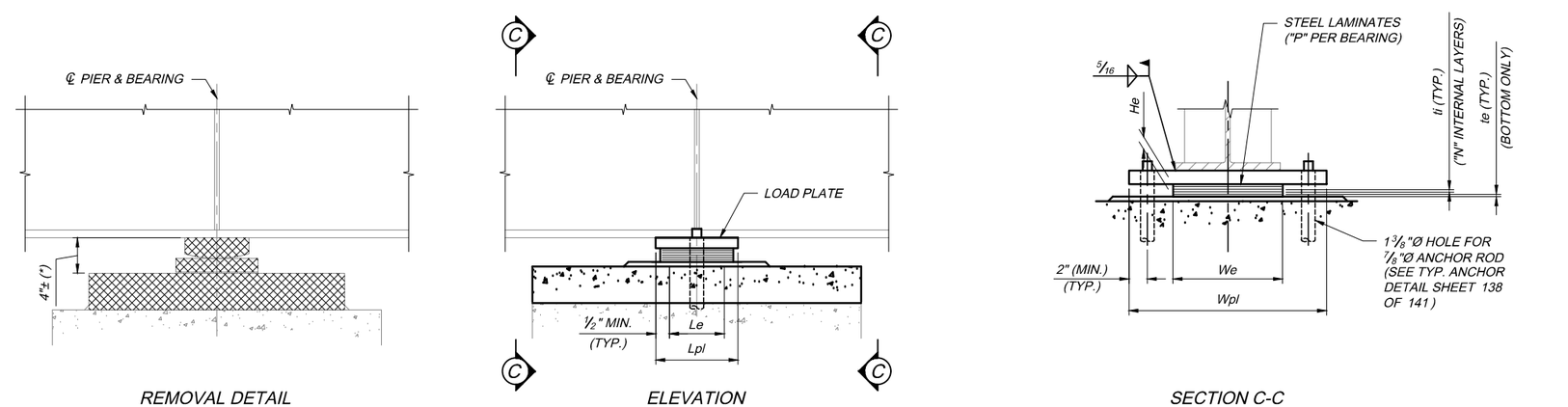

REMOVAL DETAIL

ELEVATION

SECTION C-C

BEARING DETAIL C - PIER 2 (FIXED)

(INTERIOR BEAMS SHOWN; FASCIA BEAMS SIMILAR)

NOTES

1. ELASTOMERIC BEARINGS: THE BEARINGS HAVE BEEN DESIGNED UNDER DIVISION I, SECTION 14.6.6, METHOD A, OF THE AASHTO STANDARD SPECIFICATIONS FOR HIGHWAY BRIDGES. ELASTOMERIC BEARINGS SHALL COMPLY WITH ODOT CMS ITEM 516 AND SECTION 18, BEARINGS, DIVISION II, CONSTRUCTION OF THE AASHTO STANDARD SPECIFICATIONS FOR HIGHWAY BRIDGES. BEARINGS SHALL BE GRADE 3, 50 DUROMETER ELASTOMER AND SHALL BE SUBJECTED TO THE LOAD TESTING REQUIREMENTS CORRESPONDING TO DESIGN METHOD A. THE TESTING SHALL BE INCLUDED IN THE PRICE BID FOR THE BEARINGS. THE MANUFACTURER SHALL FURNISH CERTIFIED TEST DATA. THE MANUFACTURER SHALL SUPPLY A SAMPLE BEARING OF EACH DESIGN, AS SHOWN IN THE PLANS, FOR DESTRUCTIVE TESTING AND APPROVAL PURPOSES. SAMPLE BEARINGS SHALL NOT BE PAID FOR DIRECTLY BUT SHALL BE CONSIDERED INCIDENTAL TO THE ITEM.

2. WELDING SHALL BE CONTROLLED SO THAT THE PLATE TEMPERATURE AT THE ELASTOMER BONDED SURFACE DOES NOT EXCEED 300°F AS DETERMINED BY USE OF PYROMETRIC STICKS OR OTHER TEMPERATURE MONITORING DEVICES.

3. BEARING REPOSITIONING: IF THE BEARINGS ARE SET AT AN AMBIENT TEMPERATURE HIGHER THAN 80°F OR LOWER THAN 40°F AND THE BEARING SHEAR DEFLECTION EXCEEDS ⅛ OF THE BEARING HEIGHT AT 60°F ± 10°F, THE GIRDERS SHALL BE RAISED TO ALLOW THE BEARINGS TO RETURN TO THEIR UNDEFORMED SHAPE AT 60°F ± 10°F.

2. 4. THE STEEL LOAD PLATE AND SIDE RETAINER ANGLES SHALL BE ASTM A709 GRADE 50 STEEL AND SHALL BE PAINTED IN ACCORDANCE WITH SP 514A. ANY DAMAGE TO THE EXISTING STEEL COATING SYSTEM AS A RESULT OF THE WORK NEEDED TO REPLACE THE BEARINGS SHALL BE PAINTED IN ACCORDANCE WITH SP 514A. PAINTING SHALL NOT BE PAID FOR DIRECTLY, BUT SHALL BE CONSIDERED INCIDENTAL TO THE ITEM.

5. THE STEEL LOAD PLATE SHALL BE BONDED BY VULCANIZATION TO THE ELASTOMER DURING THE MOLDING PROCESS.

6. BASIS OF PAYMENT: THE UNIT BID PRICE SHALL INCLUDE ALL MATERIALS, LABOR AND INCIDENTALS NECESSARY TO FURNISH AND INSTALL LAMINATED ELASTOMERIC BEARINGS. SAMPLE BEARINGS SHALL NOT BE MEASURED FOR PAYMENT.

7. ANCHOR BOLTS AND RODS SHALL BE PLACED AS PER ODOT CMS 510. PAYMENT FOR DOWEL HOLES AND ANCHOR RODS SHALL BE INCLUDED WITH ITEM SP 516.

8. ALL BEARINGS SHALL BE MARKED PRIOR TO SHIPPING. THE MARKS SHALL INDICATE THE BEARING LOCATION ON THE BRIDGE AND A DIRECTION ARROW THAT POINTS UP STATION. ALL MARKS SHALL BE PERMANENT AND BE VISIBLE AFTER THE BEARING IS INSTALLED.

9. THE CONTRACTOR SHALL FURNISH SHIM PLATES WITH EACH BEARING DEVICE. INCLUDE STEEL SHIMS WITH ITEM SP 516 FOR PAYMENT. INCLUDE SHIM PACK WITH BEARINGS DELIVERED TO THE SITE FOR FINAL FIELD ADJUSTMENTS.

10. SUPERSTRUCTURE SUPPORT, AND/OR JACKING AND RESETTING OF BEARINGS AS DIRECTED BY THE ENGINEER SHALL BE PERFORMED IN ACCORDANCE WITH ITEM 516 AND SP 516G. SEE STRUCTURE NOTES AND SPECIAL PROVISIONS.

11. SEE SHEET 138 OF 141 FOR ADDITIONAL BEARING DETAILS.

14. COST OF ANCHOR, NON-SHRINKING & NON-METALLIC GROUT SHALL BE INCLUDED WITH ITEM SP 516G & SP 516J.

LEGEND

DENOTES PORTIONS OF BEARINGS TO BE REMOVED (INCLUDE WITH ITEM SP 202 FOR PAYMENT)

(*) CONTRACTOR SHALL VERIFY EXISTING HEIGHT PRIOR TO FABRICATION OF NEW BEARINGS, PEDESTALS AND LOAD PLATES. SEE NOTE 9.

DESIGN AGENCY
OSBORN ENGINEERING
1111 Superior Avenue - Suite 2100 | Cleveland, OH 44114 (216)861-0200 www.osborneng.com
1201 East Market Street - Suite 200 | Akron, OH 44305 (330)535-5132

NO.	REVISIONS	BY	DATE
2	REVISED NOTE	JB	10/11/23
-	-	-	-
-	-	-	-

DESIGNED	CHECKED	DRAWN	IN CHARGE
MJD	JDH	MJD	SMK

DEYO ROAD BEARING DETAILS
DEYO ROAD OVER OHIO TURNPIKE
ERIE COUNTY
M.P. 107.5

PROJECT 43-24-05
DATE: 06/30/23

OHIO TURNPIKE AND INFRASTRUCTURE COMMISSION

MP 107.5 - Bearings.dwg; 10/11/23 - 3:37pm