ESTIMATED QUANTITIES

ITEM	TOTAL	UNIT	DESCRIPTION	ABUT.	PIERS	SUPER.	GEN.	REF. DWG.
SP202	LUMP	LUMP	PORTIONS OF STRUCTURE REMOVED				LUMP	
503	201	CU. YD.	UNCLASSIFIED EXCAVATION	30	171			
503	48	CU. YD.	ABUTMENT BACKFILL, AS PER 503.10	48				
503	LUMP	LUMP	COFFERDAMS, CRIBS AND SHEETING				LUMP	
SPECIAL	48	LIN. FT.	DRILLED SHAFT, 42" DIAMETER, INTO BEDROCK		48			
SPECIAL	101.66	LIN. FT.	DRILLED SHAFT, 48" DIAMETER, ABOVE BEDROCK		101.6			
SPECIAL	76.55	LIN. FT.	CONCRETE MISC.: CONCRETE PUMPING		76.55			
509	6,375.5	POUND	REINFORCING STEEL, GRADE 60		6,375.5			
SP509	22,887	POUND	EPOXY COATED REINFORCING STEEL, GRADE 60	22,887			0 ▲	
510	435	EACH	DOWEL HOLES, USING SP853 GROUT ANCHORING	260	175			
SP511	131.46	CU. YD.	CLASS C CONCRETE, ABUTMENTS	131.46				
SP511	77	CU. YD.	CLASS C CONCRETE, PIER FOOTINGS		77			
SP511	217.29	CU. YD.	CLASS C CONCRETE, PIER ABOVE FOOTINGS		217.29			
SP511A	64.2	CU. YD.	CLASS S CONCRETE, ABUTMENT SLABS AND BARRIERS USING SHRINKAGE COMPENSATING CEMENT	64.2				
513	106.274	POUND	STRUCTURAL STEEL, A572-50, AISC CATEGORY III, AS PER PLAN			106,274		182A & 183A
513	1832	EACH	WELDED STUD SHEAR CONNECTOR			1,832		
516	5	EACH	LAMINATED ELASTOMERIC BEARINGS, COMPLETE, AS PER PLAN	5				199
SP516C	2	EACH	BEARING DEVICES, SPHERICAL BEARINGS, FIXED		2			
SP516C	4	EACH	BEARING DEVICES, SPHERICAL BEARINGS, EXPANSION		4			
516	86.5	LIN. FT.	STRUCTURAL EXPANSION JOINT INCLUDING ELASTOMERIC STRIP SEAL, AS PER PLAN	86.5				200
SP519	0	SQ. FT.	PATCHING CONCRETE STRUCTURES				0 ▲	
SP536	58.5	SQ. YD.	CONCRETE WEATHERPROOFING, PARAPETS	58.5				
SP536	280	SQ. YD.	CONCRETE WEATHERPROOFING, DECK AND APPROACH SLABS	280				
SP536	813.2	SQ. YD.	CONCRETE WEATHERPROOFING, SUBSTRUCTURE	127.2	686			
SPECIAL	LUMP	LUMP	JACKING AND TEMPORARY SUPPORT OF BRIDGE SUPERSTRUCTURE				LUMP	
SP527	LUMP	LUMP	FALSEWORK, TEMPORARY BRACING AND PROTECTIVE STRUCTURES				LUMP	
SPECIAL	2	EACH	POST-TENSIONED CONCRETE CROSSBEAM			2		
SP524B	15	EACH	RESET EXPANSION BEARING DEVICE	5	10			
601	145.8	SQ. YD.	CRUSHED AGGREGATE SLOPE PROTECTION				145.8 ▲	
SP607	80	LIN. FT.	TYPE II FENCE, ALL ALUMINUM (6'-0" CHAIN LINK WITH SPECIALS)	80				
SP825	20,906	POUND	GALVANIZED REINFORCING STEEL, GRADE 60		20,906			

▲ TO BE USED AS DIRECTED BY THE ENGINEER.

NOTE: SEE SHEET 182A OF 219 FOR PAINTING PAY ITEM AND ADDITIONAL NOTES.

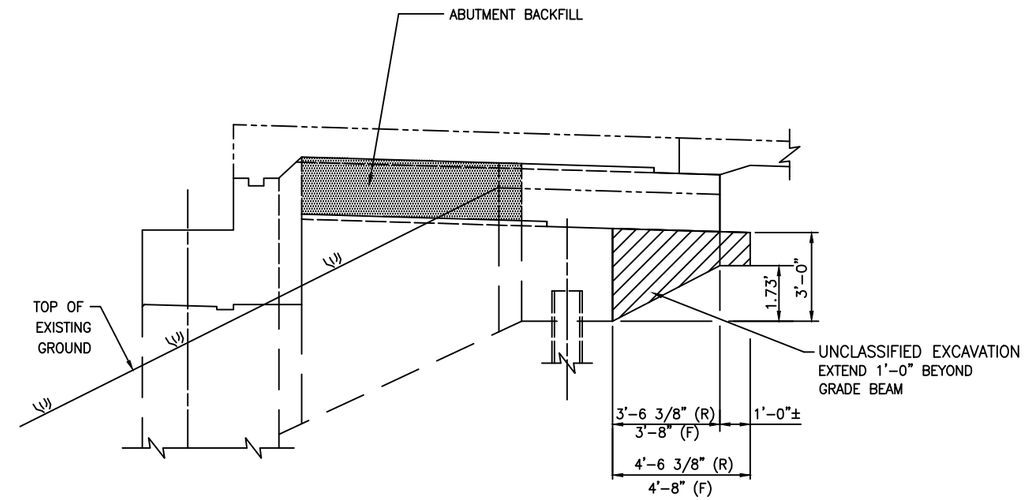

ABUTMENT EXCAVATION DIAGRAM

NO.	REVISIONS	BY	DATE
1	RECORD DRAWING	m.s.	12-97

OHIO TURNPIKE COMMISSION

ESTIMATED QUANTITIES
STATE ROUTE 88 OVER
OHIO TURNPIKE (MP 199.5)

ms consultants, inc.
YOUNGSTOWN, OHIO

DESIGNED: L.A.W.	CHECKED: W.H.	DATE: 2-96
DRAWN: L.A.W.	IN CHARGE: D.F.S.	SCALE: N.T.S.

GENERAL NOTES

DESIGN SPECIFICATIONS: THIS STRUCTURE CONFORMS TO "STANDARD SPECIFICATIONS FOR HIGHWAY BRIDGES" ADOPTED BY THE AMERICAN ASSOCIATION OF STATE HIGHWAY AND TRANSPORTATION OFFICIALS, 1992 INCLUDING THE 1993, 1994 AND 1995 INTERIM SPECIFICATIONS AND THE ODOT BRIDGE DESIGN MANUAL.

DESIGN LOADING: HS20-44 CASE II, THE ALTERNATE MILITARY LOADING, AND NO FUTURE WEARING SURFACE. 1

DESIGN STRESSES:

CONCRETE CLASS S – COMPRESSIVE STRENGTH 4500 P.S.I.

CONCRETE CLASS C – COMPRESSIVE STRENGTH 4000 P.S.I.

REINFORCING STEEL – ASTM A615, A616, A617
GRADE 60 MINIMUM YIELD STRENGTH 60,000 P.S.I.
SPIRAL REINFORCEMENT MAY BE PLAIN BARS, ASTM A82 OR A615

EXISTING STRUCTURAL STEEL – ASTM A7 (ASSUMED)
– YIELD STRENGTH 33,000 P.S.I.

NEW STRUCTURAL STEEL – ASTM A572 – YIELD STRENGTH 50,000 P.S.I.

~~CONCRETE FOR POST-TENSIONING CROSSBEAMS~~
~~UNIT STRESS – 2200 P.S.I. COMPRESSION~~
~~TENSION NOT PERMITTED~~
~~PRESTRESSING STRAND ASTM A416~~
~~f's = 270,000 P.S.I.~~
~~INITIAL STRESS = 0.70 f's (STRESS RELIEVED STRANDS)~~

REFERENCE SHALL BE MADE TO THE FOLLOWING OHIO DEPARTMENT OF TRANSPORTATION STANDARD DRAWINGS:

GR-3.1 DATED 5-6-91

UTILITIES LINES

THE CONTRACTOR SHALL EXERCISE EXTREME CARE TO PROTECT THE EXISTING UTILITY LINES IN THE VICINITY OF THE STRUCTURE WHILE PERFORMING HIS WORK. THE CONTRACTOR AND UTILITY(IES) ARE REQUESTED TO COOPERATE BY ARRANGING WORK IN SUCH A MANNER THAT INCONVENIENCE TO EITHER BE HELD TO A MINIMUM. ALL EXPENSE INVOLVED IN RELOCATION (INSTALLING) THE AFFECTED UTILITY LINES SHALL BE BORNE BY THE UTILITY(IES).

REFER TO SHEET 7 OF 219 FOR FURTHER INFORMATION.

EXISTING STRUCTURE PLANS

THE ORIGINAL DECK REPLACEMENT DESIGN PLANS MAY BE EXAMINED BY PROSPECTIVE BIDDERS AT URS CONSULTANT'S OFFICE, 564 WHITE POND DRIVE, AKRON, OHIO. THE CONTRACTOR SHALL FAMILIARIZE HIMSELF WITH THE DRAWINGS.

EXISTING STRUCTURE VERIFICATION: DETAILS, DIMENSIONS, AND ELEVATIONS SHOWN ON THESE PLANS PERTAINING TO THE EXISTING STRUCTURE HAVE BEEN OBTAINED FROM PLANS OF THE EXISTING STRUCTURE AND/OR FROM FIELD OBSERVATIONS AND MEASUREMENTS. CONSEQUENTLY, THEY ARE INDICATIVE OF THE EXISTING STRUCTURE AND THE PROPOSED WORK BUT THEY SHALL BE CONSIDERED TENTATIVE AND APPROXIMATE. THE CONTRACTOR IS REFERRED TO CMS SECTION 513.02 AND O.T.C. GENERAL CONDITIONS G-2.04 AND G-5.02.

CONTRACT BID PRICES SHALL BE BASED UPON A RECOGNITION OF THE UNCERTAINTIES DESCRIBED ABOVE AND UPON A PREBID EXAMINATION OF THE EXISTING STRUCTURE BY THE CONTRACTOR. HOWEVER, ALL PROJECT WORK SHALL BE BASED UPON ACTUAL DETAILS, DIMENSIONS, ELEVATIONS, AND SKEW ANGLES WHICH HAVE BEEN VERIFIED BY THE CONTRACTOR IN THE FIELD. THE STRUCTURAL STEEL AND STRUCTURAL STEEL DECK JOINTS SHALL NOT BE FABRICATED UNTIL THE ACTUAL DETAILS, DIMENSIONS, ELEVATIONS, AND SKEW ANGLES HAVE BEEN VERIFIED BY THE CONTRACTOR IN THE FIELD.

ANY ADDITIONAL COST RESULTING FROM VARIATIONS FROM PLAN DIMENSIONS IS THE RESPONSIBILITY OF THE CONTRACTOR AND NO ADDITIONAL PAYMENT OVER THE UNIT PRICE BID WILL BE AWARDED BY THE COMMISSION.

DIMENSIONS GIVEN ARE MEASURED HORIZONTALLY AND AT 60 DEGREES FAHRENHEIT, UNLESS OTHERWISE NOTED.

CONTINGENCY QUANTITIES: THE CONTRACTOR SHALL NOT ORDER MATERIALS OR PERFORM WORK LISTED IN THE ESTIMATED QUANTITIES FOR ITEMS DESIGNATED BY PLAN NOTE TO BE USED "AS DIRECTED BY THE ENGINEER" UNLESS AUTHORIZED BY THE ENGINEER. THE ACTUAL WORK LOCATIONS AND QUANTITIES USED AT THE ENGINEER'S DISCRETION SHALL BE MADE A MATTER OF RECORD BY INCORPORATION INTO THE FINAL CHANGE ORDER GOVERNING COMPLETION OF THIS PROJECT.

DECK PROTECTIVE METHOD: THE DECK PROTECTIVE METHODS FOR THE ABUTMENT SLAB ARE EPOXY COATED REINFORCING STEEL IN THE TOP AND BOTTOM MATS, 2 1/2" CONCRETE COVER AND CONCRETE WEATHERPROOFING SEALER ON THE TOP SURFACE.

MONOLITHIC WEARING SURFACE IS ASSUMED, FOR DESIGN PURPOSES, TO BE 1/2" THICK.

ITEM SP 536-CONCRETE WEATHERPROOFING SHALL BE APPLIED TO THE FOLLOWING EXPOSED CONCRETE SURFACES OF THE BRIDGE:

- THE TOPS OF NEW ABUTMENTS, NEW ABUTMENT SLABS AND PARAPETS.
- THE SIDES AND BOTTOM OF THE POST-TENSIONED CONCRETE CROSS BEAMS.
- APPROACH SLABS
- NEW AND EXISTING EXPOSED CONCRETE SURFACES OF ALL ABUTMENTS AND PIERS. SEALING SHALL NOT BE DONE UNTIL ANY CONCRETE PATCHING REPAIRS HAVE BEEN COMPLETED AND CURED.

CARE SHALL BE TAKEN NOT TO APPLY WEATHERPROOFING ON CONSTRUCTION JOINT SURFACES, SURFACES TO RECEIVE JOINT SEALER OR FASCIA BEAM PAINT.

ABUTMENT BACKFILL: BACKFILL SHALL BE PLACED IN ACCORDANCE WITH 503 BETWEEN THE NEW EXTENDED WINGWALLS AND EXTENDING FROM THE TOP OF THE EXISTING BACKFILL TO THE BOTTOM OF THE DECK SLAB. INCLUDE WITH ITEM 503, ABUTMENT BACKFILL, AS PER 503.10 FOR PAYMENT.

EPOXY COATED REINFORCING STEEL SUPPORT: IN ACCORDANCE WITH THE REQUIREMENTS OF SP 509 AND 509.09, THE TOP AND BOTTOM MATS OF ALL LONGITUDINAL AND TRANSVERSE EPOXY COATED REINFORCING STEEL SHALL BE SUPPORTED BY APPROVED EPOXY COATED DEVICES WITH SPACING NOT EXCEEDING 3'-0" CENTERS IN EACH DIRECTION. BROKEN CONCRETE, BRICKS, ETC. SHALL NOT BE USED FOR SUPPORT OF REINFORCING STEEL.

CUTTING OR BENDING OF REINFORCING BARS: ANY CUTTING OR BENDING OF BARS NECESSARY TO ACCOMMODATE ANY ESSENTIAL ELEMENT OF WORK RELATED TO THE PROJECT, SHALL BE INCLUDED IN THE UNIT PRICE BID FOR ITEM 509 REINFORCING STEEL, GRADE 60 AND/OR ITEM SP 509 EPOXY COATED REINFORCING STEEL, GRADE 60 AND/OR ITEM SP825 GALVANIZED REINFORCING STEEL, GRADE 60 UNLESS OTHERWISE NOTED.

REPLACEMENT OF EXISTING REINFORCING STEEL: ANY EXISTING REINFORCING BARS WHICH ARE TO BE INCORPORATED INTO THE NEW WORK AND WHICH ARE MADE UNUSABLE BY THE CONTRACTOR'S CONCRETE REMOVAL OPERATIONS SHALL BE REPLACED WITH NEW STEEL AT THE CONTRACTORS COST. ANY EXISTING REINFORCING BARS DEEMED BY THE ENGINEER TO BE UNUSABLE BECAUSE OF CORROSION SHALL BE REPLACED WITH NEW STEEL. AN ALLOWANCE IS INCLUDED IN ITEM SP 509 FOR THIS PURPOSE.

DRILLING DOWEL HOLES, FURNISHING AND PLACING SP 956 NONSHRINKING EPOXY MORTAR, AND REINFORCING BAR DOWELS, WHERE NEEDED TO REPLACE EXISTING REINFORCEMENT DAMAGED BY THE CONTRACTOR, SHALL BE DONE AT THE CONTRACTOR'S EXPENSE.

ABBREVIATIONS

E.F. – EACH FACE
F.F. – FAR FACE
N.F. – NEAR FACE
TYP. – TYPICAL
BOTT. – BOTTOM
BRG. – BEARING
PL. – PLATE
O.C. – ON CENTER
SPA. – SPACES
U.N. – UNLESS NOTED
C.P.P.– CORRUGATED PLASTIC PIPE
E.B. – EASTBOUND
W.B. – WESTBOUND

CONSTRUCTION JOINT SURFACES SHALL BE FREE FROM OIL, LAITANCE, FORM RELEASE AGENT, OR ANY OTHER MATERIAL THAT WOULD PREVENT BONDING TO THE CONCRETE SURFACE. ALL LAITANCE AND OTHER CONTAMINANTS SHALL BE REMOVED BY HIGH PRESSURE WATER BLASTING WITH A MINIMUM PRESSURE OF 5,000 P.S.I. HOWEVER, WATER BLASTING IS NOT REQUIRED WHERE EXISTING CONCRETE HAS BEEN ROUGHENED BY JACKHAMMERS DURING CONCRETE REMOVAL OPERATIONS. SURFACES SHALL BE THOROUGHLY DRENCHED WITH CLEAN WATER AND ALLOWED TO DRY TO A DAMP CONDITION FREE OF STANDING WATER BEFORE PLACING CONCRETE. PREPARATION OF CONSTRUCTION JOINT SURFACES WILL NOT BE MEASURED FOR PAYMENT, BUT THE COST THEREOF SHALL BE INCLUDED IN THE CONTRACT PRICE ON THE PERTINENT CONCRETE ITEMS.

PATCHING CONCRETE STRUCTURES: AS A CONTINGENCY 20 SQ. FT. OF SP 519 PATCHING CONCRETE STRUCTURES HAS BEEN INCLUDED ON EACH OF THE STRUCTURE'S SUMMARY OF QUANTITIES FOR USE AS DIRECTED BY THE ENGINEER.

NON-PERFORMED

NO.	REVISIONS	BY	DATE
1	RECORD DRAWING	m.s.	12/97

OHIO TURNPIKE COMMISSION

GENERAL NOTES
STATE ROUTE 88 OVER
OHIO TURNPIKE (199.5)

ms consultants, inc.
YOUNGSTOWN, OHIO

DESIGNED:	A.C.	CHECKED:	W.H.	DATE:	2-96
DRAWN:	E.R.K.	IN CHARGE:	D.F.S.	SCALE:	NTS

JACKING AND TEMPORARY SUPPORT OF SUPERSTRUCTURE NOTES

ITEM SPECIAL JACKING AND TEMPORARY SUPPORT OF BRIDGE SUPERSTRUCTURE

THIS ITEM SHALL CONSIST OF FURNISHING ALL NECESSARY LABOR MATERIALS, AND EQUIPMENT TO RAISE, SUPPORT DURING CONSTRUCTION AND REPOSITION ALL EXISTING STRUCTURES TO THE DIMENSIONS AND REQUIREMENTS DEFINED IN THE PROJECT PLANS.

THE CONTRACTOR SHALL BE RESPONSIBLE FOR THE DESIGN, INSTALLATION AND OPERATION OF AN ADEQUATE JACKING SYSTEM, INCLUDING ANY TEMPORARY OR PERMANENT SUPPORTS NECESSARY TO PERFORM THE WORK DESCRIBED IN THE PROJECT PLANS. THREE (3) SETS OF JACKING PLANS, WHICH INCLUDE INFORMATION DESCRIBED IN THIS NOTE, SHALL BE SUBMITTED TO THE ENGINEER FOR APPROVAL AT LEAST THIRTY (30) DAYS BEFORE ACTUAL WORK IS TO BEGIN. THE PLANS SHALL BE PREPARED AND STAMPED BY A PROFESSIONAL ENGINEER REGISTERED IN THE STATE OF OHIO.

JACKING SUBMITTALS SHALL INCLUDE AT LEAST THE FOLLOWING:

1. THE SIGNATURE AND NUMBER, OR PROFESSIONAL SEAL, OF THE REGISTERED PROFESSIONAL ENGINEER WHO PREPARED THE SUBMITTAL.

2. CALCULATIONS AND ANALYSIS OF THE STRUCTURE TO DETERMINE AND DEFINE THE ACTUAL LOADING APPLIED AT THE SELECTED JACKING POINTS IF THEY ARE DIFFERENT THAN THOSE SHOWN ON THIS DRAWING.

3. A DRAWING SHOWING THE PHYSICAL AND DIMENSIONAL POSITION OF THE JACKS WITH RESPECT TO THE STRUCTURE INCLUDING CLEARANCES AND CENTER OF LIFT.

4. A SCHEMATIC LAYOUT OF JACKS, CHECK VALVES, PUMPS WITH 3 WAY RETRACTOR VALVE, PRESSURE GAGES, FLOW CONTROL VALVES, ETC. IN ACCORDANCE WITH MANUFACTURER'S RECOMMENDATIONS. (ALL JACKS FOR EACH ABUTMENT OR PIER SHALL BE CONNECTED TOGETHER. ALL JACKS AT A SUBSTRUCTURE LOCATION SHALL BE THE SAME SIZE.)

5. ANALYSIS AND CALCULATIONS OF THE STRESSES INDUCED OR CREATED IN THE STRUCTURE AND ANY TEMPORARY SUPPORTS. DESIGN CALCULATIONS FOR ANY TEMPORARY SUPPORTS. (TEMPORARY SUPPORT SHALL BE UNYIELDING AND SHALL BE CAPABLE OF SUPPORTING THE STRUCTURE FOR THE DURATION OF THIS PROJECT.)

6. PHYSICAL DIMENSIONS, MATERIALS, AND FABRICATION DETAILS OF ANY TEMPORARY SUPPORTS INCLUDING HORIZONTAL AND VERTICAL MOVEMENT RESTRAINT PROVIDED. (TARGETS AND TILT METERS CAN BE PLACED ON THE STRUCTURE TO MONITOR ANY MOVEMENT.)

7. A STEP BY STEP PROCEDURE DETAILING ALL STEPS IN THE JACKING OPERATION.

8. METHOD OF ATTACHMENT TO STRUCTURAL MEMBERS. (WELDING TO THE EXISTING STRUCTURAL STEEL WILL NOT BE PERMITTED.)

THE ENTIRE SYSTEM INCLUDING JACKS SHALL HAVE 50% MORE CAPACITY THAN REQUIRED BASED ON CALCULATED LOADS.

JACKS SHALL HAVE A SWIVEL LOAD CAP, A DOMED PISTON HEAD OR SOME OTHER DEVICE TO PROTECT AGAINST THE EFFECTS OF SIDE LOAD ON THE JACK.

JACKS ALONE SHALL NOT BE USED TO SUPPORT LOADS EXCEPT DURING THE ACTUAL JACKING OPERATION. TEMPORARY SUPPORTS, BLOCKING OR OTHER METHODS APPROVED BY THE ENGINEER SHALL BE USED.

SINGLE ACTING RAMS WITH NO OVER-TRAVEL PROTECTION SYSTEM SHALL NOT BE USED.

SPARE EQUIPMENT SHALL BE AVAILABLE ON SITE OF THE REQUIRED STRUCTURE RAISING TO PROCEED IN THE EVENT OF BREAKDOWN. A LIST OF SPARE EQUIPMENT SHALL BE PROVIDED TO THE ENGINEER.

THE JACKING OPERATION SHALL LIFT ALL BEAMS AT ALL ABUTMENTS AND PIERS SIMULTANEOUSLY.

IF, DURING THE JACKING OPERATIONS, CRACKING OF THE CONCRETE SUPERSTRUCTURE, SEPARATION OF THE CONCRETE DECK FROM THE STEEL STRINGERS, OR OTHER DAMAGE TO THE STRUCTURE IS VISUALLY OBSERVED, THE JACKING OPERATION SHALL IMMEDIATELY CEASE AND APPROVED SUPPORTS SHALL BE INSTALLED. THE CONTRACTOR SHALL THEN ANALYZE THE DAMAGE AND SUBMIT A METHOD OF CORRECTION TO THE ENGINEER FOR APPROVAL. ANY BEAMS THAT SEPARATE FROM THE DECK SHALL BE EPOXY INJECTED FOR THE DISTANCE OF THE SEPARATION IN ACCORDANCE WITH ITEM SP516, CRACK REPAIR. COST OF THIS EPOXY INJECTION OR OTHER REQUIRED REPAIRS SHALL BE BORNE BY THE CONTRACTOR.

TEMPORARY BENTS SHALL NOT BE LOCATED IN THE ROADWAY AND SHOULDER AREA BETWEEN THE EXISTING PIERS.

THE CONTRACTOR SHALL DEMONSTRATE TO THE ENGINEER THAT THE BRIDGE BEARINGS ARE FULLY SEATED BEWTEEN ALL CONTACT AREAS. IF FULL SEATING IS NOT ATTAINED, SUITABLE MEANS OF REPAIR, SUBJECT TO THE APPROVAL OF THE ENGINEER, WILL BE REQUIRED AT THE CONTRACTOR'S EXPENSE.

THE JACKING OPERATION SHALL BE DIRECTED BY A PROFESSIONAL ENGINEER EMPLOYED BY THE CONTRACTOR. FAILURE TO HAVE A PROFESSIONAL ENGINEER PRESENT SHALL BE CAUSE FOR CEASING JACKING OPERATIONS.

CONTRACTORS PRE-QUALIFICATIONS

A. THE CONTRACTOR'S STAFF SHALL BE EXPERIENCED IN THE DESIGN OF JACKING AND TEMPORARY SUPPORT OF BRIDGE SUPERSTRUCTURES.

B. THE CONTRACTOR'S STAFF SHALL INCLUDE AT LEAST ONE REGISTERED PROFESSIONAL ENGINEER WITH AT LEAST FIVE YEARS OF SUPERVISING EXPERIENCE IN THE JACKING AND TEMPORARY SUPPORT OF SUPERSTRUCTURES.

C. THE CONTRACTOR'S STAFF SHALL INCLUDE STRUCTURAL ERECTION FOREMEN WITH A MINIMUM OF FIVE YEAR'S EXPERIENCE IN JACKING AND TEMPORARY SUPPORT OF BRIDGE SUPERSTRUCTURES.

D. THE CONTRACTOR SHALL SUBMIT DOCUMENTATION THAT PROJECT PERSONNEL HAVE APPROPRIATE QUALIFICATIONS.

   1. RESUMES OF PROJECT MANAGERS, SUPERINTENDENTS, FOREMEN, AND ERECTION PERSONNEL TO BE EMPLOYED ON THIS PROJECT SHOWING THE TYPE, LENGTH AND NUMBER OF JACKING AND TEMPORARY SUPPORT OF SUPERSTRUCTURE SUPPORTED WITHIN THE PAST FIVE YEARS.

   2. INADEQUATE PROOF OF THE QUALIFICATIONS OF THE AFOREMENTIONED PERSONNEL SHALL BE CAUSE FOR REJECTION OF PRE-QUALIFICATION.

E. THE SUBSTITUTION OF UNQUALIFIED PERSONNEL DURING CONSTRUCTION SHALL BE CAUSE FOR THE ENGINEER TO TERMINATE THE CONTRACTOR'S OPERATIONS UNTIL PERSONNEL SUITABLE TO THE ENGINEER ARE PROVIDED.

F. THE CONTRACTOR SHALL LIST AT LEAST TEN ACTIVE OR COMPLETED PROJECTS THAT ARE SIMILAR IN CONCEPT TO THE PROPOSED PROJECT. THE LIST OF PROJECT REFERENCES SHALL INCLUDE THE FOLLOWING INFORMATION.

   1. PROJECT NAME AND LOCATION.
   2. DESCRIPTION OF BRIDGE (LENGTH, HEIGHT, SPANS AND TRAFFIC CONDITIONS).
   3. CLIENT (NAME, ADDRESS AND TELEPHONE NUMBER).
   4. ENGINEER (NAME, ADDRESS AND TELEPHONE NUMBER).

G. PRELIMINARY DESIGN DETAILS OF HIS PROPOSED PROCEDURE SHALL BE SUBMITTED TO ALLOW REVIEW FOR CONFORMANCE WITH THE INTENT OF THE PROJECT AND THIS SPECIFICATION. THE ENGINEER WILL BE THE SOLE JUDGE OF THE ADEQUACY OF THE INFORMATION SUBMITTED. INADEQUATE PROOF OF ABILITY OR INSUFFICIENT DETAILS WILL BE A CAUSE FOR REJECTION.

BASIS OF PAYMENT

PAYMENT SHALL BE MADE AT THE LUMP SUM PRICE BID FOR ITEM SPECIAL, JACKING AND TEMPORARY SUPPORT OF BRIDGE SUPERSTRUCTURE AND SHALL INCLUDE ALL NECESSARY TOOLS, LABOR, EQUIPMENT AND MATERIAL NECESSARY TO COMPLETE THIS ITEM OF WORK.

MAINTENANCE OF TRAFFIC

THE WORK CALLED FOR UNDER THIS CONTRACT DICTATES THAT THE OHIO TURNPIKE REMAIN OPEN TO TRAFFIC DURING THE JACKING AND TEMPORARY SUPPORT OF THE SUPERSTRUCTURE OF STATE ROUTE 88 BRIDGE OVER THE OHIO TURNPIKE. THE CONTRACTOR SHALL EXPEDITE TO THE FULLEST EXTENT THE WORK INVOLVED TO PROTECT THE TEMPORARY SUPPORTS FROM TRAFFIC DURING CONSTRUCTION. THE CONTRACTOR SHALL BE RESPONSIBLE FOR ALL TRAFFIC CONTROL.

REFER TO MAINLINE MAINTENANCE OF TRAFFIC PLAN AND CONSTRUCTION PHASING NOTES FOR FURTHER INFORMATION. THE COST SHALL BE INCLUDED IN THE LUMP SUM BID FOR MAINTAINING TRAFFIC AS PER ITEM SP614.

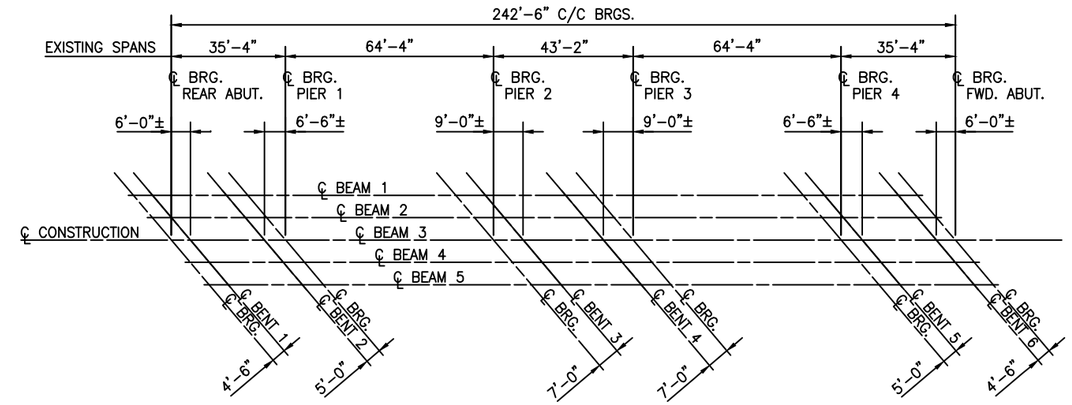

SUGGESTED LOCATION PLAN OF TEMPORARY BENTS

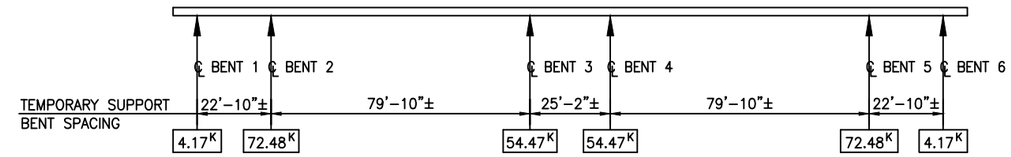

MAXIMUM DEAD LOAD JACKING REACTIONS
TYPICAL BEAM ELEVATION

NO.	REVISIONS	BY	DATE
1	RECORDED DRAWING	ms	12/97

OHIO TURNPIKE COMMISSION

JACKING & TEMPORARY SUPPORT NOTES
STATE ROUTE 88 OVER
OHIO TURNPIKE (MP 199.5)

ms consultants, inc.
YOUNGSTOWN, OHIO

DESIGNED: A.C.	CHECKED: W.H.	DATE: 2-2-96
DRAWN: R.A.M.	IN CHARGE: D.F.S.	SCALE: N.T.S.

POST-TENSIONING NOTES

ITEM SPECIAL – POST-TENSIONED CONCRETE CROSSBEAM

1.00 GENERAL

1.01 SPECIFICATION ABBREVIATIONS

A. ODOT –DENOTES THE OHIO DEPARTMENT OF TRANSPORTATION.
B. CMS –DENOTES AN ODOT CONSTRUCTION AND MATERIAL SPECIFICATION.
C. SP –THIS PREFIX DENOTES AN OHIO TURNPIKE SPECIAL PROVISION.
D. ASTM –DENOTES AN AMERICAN SOCIETY FOR TESTING AND MATERIALS SPECIFICATION.
E. AASHTO –DENOTES AN AMERICAN ASSOCIATION OF STATE HIGHWAY AND TRANSPORTATION OFFICIALS SPECIFICATION.
F. SSHB –DENOTES THE AASHTO STANDARD SPECIFICATIONS FOR HIGHWAY BRIDGES.

1.02 NOTATIONS AND DEFINITIONS

REFER TO SSHB DIVISION I ARTICLES 9.1.2 AND 9.1.3 FOR NOTATIONS AND DEFINITIONS RESPECTIVELY.

1.03 DESCRIPTION OF WORK

THIS WORK SHALL CONSIST OF PROVIDING ALL LABOR, MATERIALS, TOOLS, EQUIPMENT AND INCIDENTALS REQUIRED TO FURNISH AND INSTALL THE POST-TENSIONED CAST-IN-PLACE CONCRETE CROSSBEAMS AT THE LOCATIONS SHOWN ON THE PLANS AND IN ACCORDANCE WITH THESE SPECIFICATIONS. THE WORK SHALL INCLUDE BUT NOT BE LIMITED TO THE FOLLOWING:

1. PREPARATION AND SUBMITTAL OF ALL NECESSARY CALCULATIONS AND SHOP DRAWINGS FOR CONSTRUCTION OF THE POST-TENSIONED CONCRETE CROSSBEAM.

2. ALL NECESSARY TESTING, PREPARATION AND SUBMITTAL OF TEST REPORTS.

3. PROVIDING ALL NECESSARY CONSTRUCTION INSPECTION ACCESS EQUIPMENT AND ASSISTANCE.

4. REMOVAL OF PAINT ON EXISTING STRUCTURAL STEEL PER PROVISIONS OF SP525A AND SURFACE PREPARATION OF EXISTING BEAMS AND NEW STEEL CARRYING GIRDERS PER PROVISIONS OF SP514 AT CONCRETE CROSSBEAM LOCATIONS, INCLUDING ANY REQUIRED REPAINTING OF AREAS OUTSIDE THE LIMITS OF THE CONCRETE CROSSBEAMS PER PROVISIONS OF SP514 AND SP514A.

5. FIELD DRILLING OF HOLES IN THE EXISTING BEAMS FOR PLACEMENT OF REINFORCING BARS.

6. SHOP FABRICATION OF HOLES IN THE NEW STEEL CARRYING GIRDERS FOR APPROVED ANCHORAGE DEVICES FOR POST-TENSIONING.

7. FURNISHING AND INSTALLING:
   A. ALL NECESSARY FORMWORK AND FORMWORK SUPPORTS AND THEIR SUBSEQUENT REMOVAL.
   B. EPOXY COATED REINFORCING BARS IN THE CROSSBEAMS.
   C. CLASS S CONCRETE USING SHRINKAGE COMPENSATING CEMENT FOR THE CROSSBEAMS.
   D. GALVANIZED RIGID DUCTS AND THEIR SUPPORTS.
   E. ANCHORAGE DEVICES AND THEIR CONNECTION TO THE CARRYING GIRDERS.
   F. STRAND TENDONS AND THEIR POST-TENSIONING.
   G. CEMENT GROUT UNDER PRESSURE INTO THE DUCTS.

THE ABOVE LIST IS NOT ALL INCLUSIVE. ALL THE WORK REQUIRED TO COMPLETELY FURNISH AND INSTALL THE POST-TENSIONED CONCRETE CROSSBEAMS, WHICH IS NOT SPECIFICALLY INCLUDED IN OTHER ITEMS OF WORK, IS INCLUDED IN THIS ITEM.

THE BEAM SHALL BE CAST BELOW THE EXISTING CONCRETE SUPERSTRUCTURE DECK SLAB; BETWEEN THE NEW STEEL CARRYING GIRDERS; BETWEEN AND AROUND THE EXISTING SUPERSTRUCTURE BEAMS, TO TOTALLY ENVELOPE THEM. END WELDED STUD SHEAR CONNECTORS SHALL BE WELDED TO THE WEBS OF THE NEW CARRYING GIRDER AND THE EXISTING BEAMS WHERE THEY WILL BE IN CONTACT WITH THE CAST-IN-PLACE CONCRETE. THE WELDED STUD SHEAR CONNECTORS SHALL BE PAID FOR SEPARATELY PER ITEM 513. EPOXY COATED BEAM REINFORCING STEEL SHALL BE PLACED BETWEEN AND BELOW THE EXISTING BEAMS AS SHOWN IN THE DRAWINGS. DUCTS FOR POST-TENSIONING TENDONS SHALL BE PLACED BETWEEN THE NEW CARRYING GIRDERS, DRAPING BELOW THE EXISTING BEAMS AS SHOWN IN THE DRAWINGS. POST-TENSIONING SHALL BE APPLIED TO TENDONS INSIDE THE DUCTS AND ANCHORED ONTO STEEL PLATES ON THE EXTERIOR WEB OF THE CARRYING GIRDERS. CONCRETE SHALL BE DEPOSITED THROUGH ACCESS HOLES CUT IN THE DECK OR THE FORMWORK. THE CROSSBEAM SHALL BE POST-TENSIONED TO THE LOADS SPECIFIED IN THE PLANS USING THE METHODS AND EQUIPMENT RECOMMENDED BY THE MANUFACTURER, AFTER THE CONCRETE HAS GAINED A MINIMUM COMPRESSIVE STRENGTH OF 4,000 PSI. ACCESS HOLES THROUGH THE DECK SHALL BE REPAIRED. POST-TENSIONING DUCTS SHALL BE GROUTED FOLLOWING MANUFACTURER'S RECOMMENDATIONS.

1.04 POST-TENSIONING CONTRACTOR QUALIFICATIONS

POST-TENSIONING WORK SHALL BE DEFINED AS ALL CONSTRUCTION ACTIVITIES RELATED TO POST-TENSIONING, INCLUDING FURNISHING, FABRICATING, INSTALLING, STRESSING, AND GROUTING THE POST-TENSIONING SYSTEMS.

THE CONTRACTOR PROPOSING TO PERFORM THE POST-TENSIONING WORK IN THE CONCRETE CROSSBEAMS FOR THIS PROJECT SHALL BE PREQUALIFIED WITH ODOT PER THE OHIO REVISED CODE 5525.02 THROUGH 5525.03.

PRIOR TO COMMENCEMENT OF POST-TENSIONING WORK, THE CONTRACTOR SHALL SUBMIT TO THE PROJECT ENGINEER A REPORT WHICH IDENTIFIES THE POST-TENSIONING CONTRACTOR'S PERSONNEL WHO WILL BE PERFORMING AND SUPERVISING THE POST-TENSIONING WORK. THE REPORT SHALL INCLUDE THE NAMES OF THE ENGINEER-IN-CHARGE, ON-SITE SUPERVISORS, JACK AND GROUT PUMP OPERATORS.

THE REPORT SHALL ALSO CONTAIN A LIST OF EMPLOYERS' NAMES, TELEPHONE NUMBERS, PROJECT LOCATIONS AND ALSO THE DATES WHEN WORK WAS CONDUCTED ON PREVIOUS POST-TENSIONING PROJECTS, WITH A DESCRIPTION OF THE EXTENT OF WORK PERFORMED. THIS INFORMATION MUST BE VERIFIABLE.

TO SATISFY THE REQUIREMENTS OF CMS 108.05, THE PERSONNEL PERFORMING POST-TENSIONING WORK SHALL HAVE ACQUIRED WORK EXPERIENCE WHICH IS NOT LESS THAN THE LEVEL OF EXPERIENCE AS DEFINED BELOW:

ENGINEER-IN-CHARGE: THE ENGINEER-IN-CHARGE SHALL BE A STATE OF OHIO REGISTERED PROFESSIONAL ENGINEER AND SHALL BE RESPONSIBLE FOR OVERSEEING THE POST TENSIONING WORK AND VERIFYING THE RESULTS OF THE STRESSING. THE ENGINEER-IN-CHARGE SHALL HAVE THREE (3) YEARS OF CONSTRUCTION EXPERIENCE IN INSTALLATION OF POST-TENSIONING TENDONS AND SHALL HAVE OVERSEEN 100 SUCCESSFUL INSTALLATION, JACKING, AND GROUTING PROCEDURES FOR POST-TENSIONED TENDONS. THE WORK EXPERIENCE TIME PERIOD IS COMPUTED BY THE ADDITION OF ALL DOCUMENTED DURATIONS OF POST-TENSIONING WORK TIME ON CONSTRUCTION PROJECTS.

ON-SITE SUPERVISOR(S): AN ON-SITE SUPERVISOR SHALL BE PRESENT AT THE JOB SITE AT ALL TIMES DURING THE PERFORMANCE OF POST-TENSIONING WORK. THE ON-SITE SUPERVISOR SHALL HAVE ONE (1) YEAR OF CONSTRUCTION EXPERIENCE IN INSTALLATION OF POST-TENSIONING TENDONS AND SHALL HAVE SUPERVISED 100 SUCCESSFUL INSTALLATION, JACKING AND GROUTING PROCEDURES FOR POST-TENSIONED TENDONS. THE WORK EXPERIENCE TIME PERIOD IS COMPUTED BY THE ADDITION OF ALL DOCUMENTED DURATIONS OF POST-TENSIONING WORK TIME ON CONSTRUCTION PROJECTS.

JACK AND GROUT PUMP OPERATORS: THESE OPERATORS SHALL HAVE SUCCESSFULLY PERFORMED 60 INDIVIDUAL STRESSING AND GROUTING PROCEDURES RESPECTIVELY ON POST-TENSIONING PROJECTS.

THE PROJECT ENGINEER WILL APPROVE OR REJECT THE POST-TENSIONING CONTRACTOR'S PERSONNEL WITHIN 15 CALENDAR DAYS FOLLOWING THE SUBMISSION OF THE REPORT OF NAMES AND VERIFIABLE RESUME INFORMATION. NO POST-TENSIONING WORK SHALL COMMENCE UNTIL A WRITTEN LETTER OF APPROVAL HAS BEEN PROVIDED BY THE PROJECT ENGINEER. IN THE EVENT THE POST-TENSIONING CONTRACTOR ELECTS TO SUBSTITUTE PERSONNEL, VERIFIABLE RESUME INFORMATION SHALL BE SUBMITTED TO THE PROJECT ENGINEER PRIOR TO THAT INDIVIDUAL'S PERFORMANCE OF POST-TENSIONING WORK. THE PROJECT ENGINEER WILL APPROVE OR REJECT THE POST-TENSIONING CONTRACTOR'S PROPOSED SUBSTITUTE WITHIN 15 CALENDAR DAYS.

THE PROJECT ENGINEER WILL TAKE ACTION AFFORDED TO HIM PURSUANT TO THE CMS, INCLUDING BUT NOT LIMITED TO 108.05, IN ORDER TO BE ASSURED THAT ALL PERSONNEL HAVE SUFFICIENT AND REQUISITE SKILL AND EXPERIENCE TO PROPERLY PERFORM THE WORK ASSIGNED TO THEM.

1 THE LOCATIONS, NUMBER AND SIZE OF ANY HOLES DRILLED IN THE EXISTING CONCRETE SLAB, BY THE CONTRACTOR, FOR DEPOSITING THE CONCRETE SHALL BE PRE-APPROVED BY THE PROJECT ENGINEER.

1.05 POST-TENSIONING SYSTEM SUBMISSION

PRIOR TO FABRICATION OF THE PROPOSED STEEL CARRYING GIRDERS, THE CONTRACTOR SHALL SUBMIT TO THE PROJECT ENGINEER FOR APPROVAL THE NAMES OF PROPOSED SUPPLIER(S) WITH DESCRIPTIONS AND DETAILS OF ALL POST-TENSIONING COMPONENTS, INCLUDING THE ANCHORAGE HARDWARE.

THE SUBMISSION SHALL INCLUDE SHOP DRAWINGS SHOWING COMPLETE DETAILS, OF TENDON PROFILE, ANCHORAGE COMPONENTS, GROUTING METHODS AND STRESSING PROCEDURES INCLUDING ANTICIPATED FRICTION AND WOBBLE COEFFICIENTS; AND COMPUTATIONS INDICATING THE MINIMUM FORCES REQUIRED, THE SPECIFIED PRESTRESSING LOSSES, THE FINAL WORKING STRESS AND THE STRESSING SEQUENCE. ONCE APPROVED, NO CHANGES OR DEVIATION FROM THE SHOP DRAWINGS SHALL BE PERMITTED WITHOUT PRIOR, WRITTEN APPROVAL OF THE PROJECT ENGINEER.

THE SUBMISSION SHALL INCLUDE HIS PROPOSED CONNECTION DETAILS OF THE ANCHORAGE DEVICES TO THE WEBS OF THE STEEL CARRYING GIRDERS, ALONG WITH CHECKED CALCULATIONS BY A STATE OF OHIO REGISTERED PROFESSIONAL ENGINEER VERIFYING THAT AASHTO ALLOWABLE STEEL, WELD, AND FATIGUE STRESSES ARE NOT EXCEEDED FOR THE ANCHORAGE CONNECTION. THE ANCHORAGE SYSTEM SHALL BE DESIGNED SO THAT THE ENTIRE LENGTH OF THE CONCRETE CROSS BEAM BETWEEN THE STEEL CARRYING GIRDERS IS STRESSED BY THE POST-TENSIONING TENDONS. REFER TO SSHB DIVISION II ARTICLE 10.2 FOR ADDITIONAL SUBMISSION REQUIREMENTS.

IT IS ANTICIPATED THAT HOLES WILL BE REQUIRED IN THE WEBS OF THE STEEL CARRYING GIRDERS FOR THE ANCHORAGE DEVICES. ALL HOLES IN THE PROPOSED CARRYING GIRDERS SHALL BE SHOP FABRICATED. THE PRESENT WEB SIZE AT THE CONCRETE CROSS BEAM LOCATIONS ASSUME A MAXIMUM WEB REMOVAL AREA OF 20 SQUARE INCHES FOR EACH ANCHORAGE DEVICE WHILE STILL MAINTAINING THE MINIMUM DESIGN SECTION.

NO.	REVISION	BY	DATE
	RECORD DRAWING		12/97

OHIO TURNPIKE COMMISSI

POST-TENSIONING NOTES
STATE ROUTE 88 OVER
OHIO TURNPIKE
(M.P.199.5)

DATE:	FEB. 1996	SCALE:	N.T.S.
CONTRACT:	77-96-06	SHEET	185 OF 219

POST-TENSIONING NOTES

1.05 POST-TENSIONING SYSTEM SUBMISSION CONTINUED

SHOULD A LARGER HOLE AREA BE REQUIRED FOR THE ANCHORAGE DEVICE CONNECTION SUBMITTED, THE GIRDER WILL REQUIRE A THICKER WEB IN THE CROSSBEAM REGION THAN THAT SHOWN IN THE PLANS. THE CONTRACTOR SHALL INCLUDE COMPLETE DETAILS FOR THE THICKENED GIRDER WEB IN HIS SUBMISSION FOR APPROVAL BY THE PROJECT ENGINEER. THE ADDITIONAL STEEL REQUIRED FOR AN APPROVED THICKENED WEB DESIGN SHALL BE PAID FOR AT THE UNIT PRICE BID FOR ITEM 513 – STRUCTURAL STEEL, A572-50 AISC CATEGORY III, AS PER PLAN.

THE PROJECT ENGINEER WILL APPROVE OR REJECT THE CONTRACTOR'S SUBMISSION WITHIN 15 CALENDAR DAYS. THE CONTRACTOR SHALL NOT SUBMIT FINAL SHOP DRAWINGS FOR THE PROPOSED STEEL CARRYING GIRDERS UNTIL THIS SUBMISSION HAS BEEN APPROVED AND APPLICABLE DETAILS HAVE BEEN INCORPORATED IN THE SHOP DRAWINGS.

THE CONTRACTOR'S REDESIGN OF THE POST-TENSIONING SYSTEM, WILL BE CONSIDERED. HOWEVER, IF IT IS REJECTED, THE CONTRACTOR SHALL USE THE DESIGN AND DETAILS SHOWN IN THE PLANS. NO TIME EXTENSION OR ADDITIONAL COMPENSATION WILL BE ALLOWED DUE TO THE CONTRACTOR'S REDESIGN.

1.06 FORMWORK SUPPORT SUBMISSION

THE CONTRACTOR SHALL SUBMIT TO THE PROJECT ENGINEER FOR APPROVAL HIS PROPOSED FORMWORK, INCLUDING ITS SUPPORT, FOR THE PROPOSED POST-TENSIONED CONCRETE CROSSBEAMS. THE FORMWORK SHALL NOT BE SUPPORTED FROM THE EXISTING SUPERSTRUCTURE.

THE SUBMISSION SHALL INCLUDE DRAWINGS, A SEQUENCE OF CONSTRUCTION AND REMOVAL, AND CHECKED CALCULATIONS BY A STATE OF OHIO REGISTERED PROFESSIONAL ENGINEER. SUPPORT REMOVAL SHALL BEGIN AT THE CENTERLINE OF THE STRUCTURE AND PROCEED OUTWARD SO AS NOT TO OVERSTRESS THE COMPLETED CROSSBEAM. FORMWORK SHALL NOT RESTRICT THE CONCRETE CROSSBEAM DURING POST-TENSIONING.

THE PROJECT ENGINEER WILL APPROVE OR REJECT THE CONTRACTOR'S SUBMISSION WITHIN 15 CALENDAR DAYS.

2.00 MATERIALS

2.01 CONCRETE

THE CONCRETE FOR THE POST-TENSIONED CROSSBEAMS SHALL BE CLASS S CONCRETE, USING SHRINKAGE COMPENSATING CEMENT, WITH A MINIMUM COMPRESSIVE STRENGTH OF 4500 PSI, AND SHALL BE IN ACCORDANCE WITH APPLICABLE SECTIONS OF SP511A.

2.02 NON-PRESTRESSED EPOXY COATED REINFORCEMENT

NON-PRESTRESSED EPOXY COATED REINFORCEMENT IN THE POST-TENSIONED CROSSBEAMS SHALL BE IN ACCORDANCE WITH APPLICABLE SECTIONS OF SP509.

2.03 PRESTRESSING STEEL

A. STRANDS USED IN POST-TENSIONING TENDONS SHALL CONFORM TO ASTM A416, "UNCOATED SEVEN-WIRE STRESS-RELIEVED STRAND FOR PRESTRESSED CONCRETE."
B. THE PRESENT DESIGN USES 0.50" DIAMETER GRADE 270 STRESS RELIEVED STRANDS, WITH 7 STRANDS IN EACH DUCT.
C. SHOULD THE CONTRACTOR CHOOSE TO USE LOW-RELAXATION STRANDS PER SUPPLEMENT S1 OF ASTM A416 AND/OR 0.60" DIAMETER STRANDS AND/OR A REVISED GROUPING OF STRANDS, HE SHALL SUBMIT CALCULATIONS BY A STATE OF OHIO REGISTERED PROFESSIONAL ENGINEER FOR HIS REVISED DESIGN TO THE PROJECT ENGINEER FOR APPROVAL. THE REVISED DESIGN SHALL BE BASED ON ALL APPLICABLE REQUIREMENTS OF SSHB DIVISION I SECTION 9 AND DIVISION II SECTION 10.

THE PROJECT ENGINEER WILL APPROVE OR REJECT THE CONTRACTOR'S SUBMISSION WITHIN 15 CALENDAR DAYS. THE CONTRACTOR SHALL NOT SUBMIT FINAL SHOP DRAWINGS FOR THE PROPOSED STEEL CARRYING GIRDERS UNTIL THIS SUBMISSION HAS BEEN APPROVED AND APPLICABLE DETAILS HAVE BEEN INCORPORATED IN THE SHOP DRAWINGS.

NO TIME EXTENSION OR ADDITIONAL COMPENSATION WILL BE ALLOWED DUE TO THE CONTRACTOR'S REDESIGN.

D. COUPLERS FOR PRESTRESSING TENDONS SHALL NOT BE ALLOWED.

E. IDENTIFICATION AND TESTING OF PRESTRESSING STRANDS SHALL BE IN ACCORDANCE WITH SSHB DIVISION II ARTICLES 10.5 AND 10.5.2.

F. PROTECTION OF PRESTRESSING STEEL SHALL BE IN ACCORDANCE WITH SSHB DIVISION II ARTICLES 10.4.2.2.1 AND 10.6.

2.04 COATING

THE COATING FOR PRESTRESSING STEEL, AS REQUIRED PER SSHB DIVISION II ARTICLES 10.4.2.2.1 AND 10.6, SHALL BE A CORROSION INHIBITOR. REFER TO SSHB DIVISION II, ARTICLE 10.7 FOR THE MATERIAL REQUIREMENTS.

2.05 DUCTS

A. DUCTS FOR PRESTRESSING SHALL BE FORMED BY RIGID METAL SHEATHING. REFER TO SSHB DIVISION II ARTICLES 10.8 AND 10.8.1 FOR ADDITIONAL REQUIREMENTS. A WOBBLE COEFFICIENT K=0.0002/FT. AND CURVATURE COEFFICIENT U=0.25 FOR THE SHEATHING WAS USED IN THE DESIGN.

B. THE REQUIRED DUCT AREA FOR THE MULTIPLE STRAND TENDONS SHALL BE IN ACCORDANCE WITH SSHB DIVISION II ARTICLE 10.8.3.
C. REFER TO SSHB DIVISION II ARTICLE 10.8.4, FOR REQUIREMENTS OF METAL COUPLING AND TRANSITION FITTINGS FOR SHEATHING, GROUT PIPES, VENTS, AND DRAIN PIPES.

2.06 ANCHORAGE HARDWARE

A. THE ANCHORAGE HARDWARE FOR EACH TENDON SHALL INCLUDE THE ANCHORAGE DEVICE, THE LOCAL ZONE REINFORCEMENT, THE TAPERED BEARING PLATE WELDED TO THE WEB OF THE CARRYING GIRDER, AND A PROTECTIVE STEEL CAP.

B. THE LOCAL ZONE SHALL MEET THE REQUIREMENTS OF SSHB DIVISION I ARTICLE 9.21.2.2.

C. THE TAPERED BEARING PLATE SIZE SHALL BE AS REQUIRED FOR THE ANCHORAGE DEVICE, BUT SHALL BE A MINIMUM 8" X 8" SIZE.

D. A 5" DIAMETER HOLE IN THE GIRDER WEB IS PRESUMED IN THE DESIGN. THE HOLE FOR THE BEARING PLATE SHALL BE AS REQUIRED FOR THE ANCHORAGE DEVICE, AND SHALL BE COUNTERBORED TO SEAT THE ANCHOR HEAD.

E. ANCHORAGES SHALL MEET THE REQUIREMENTS OF SSHB DIVISION I ARTICLES 9.21.2.3.2 AND 9.26.

F. THE STEEL CAP SHALL BE SECURELY ATTACHED TO THE BEARING PLATE AFTER POST-TENSIONING AND GROUTING, AND SHALL HAVE A GREASE FITTING ATTACHED FOR FILLING THE VOID WITH A CORROSION INHIBITING GREASE.

G. THE ANCHORAGE SHALL BE SO ARRANGED THAT THE PRESTRESSING FORCE OF THE TENDON MAY BE VERIFIED PRIOR TO REMOVAL OF THE STRESSING EQUIPMENT.

H. REFER TO SECTION 1.05 FOR SUBMISSION REQUIREMENTS FOR ANCHORAGE DEVICES.

2.07 GROUT

MATERIALS FOR USE IN MAKING GROUT WHICH IS TO BE PLACED IN THE DUCTS AFTER TENDONS ARE POST-TENSIONED SHALL CONFORM TO SSHB DIVISION II ARTICLES 10.9.1 THROUGH 10.9.3. THE USE OF ADMIXTURES MUST HAVE THE PROJECT ENGINEER'S APPROVAL PRIOR TO USE IN THE GROUT.

3.00 PLACEMENT

3.01 DUCTS, VENTS AND DRAINS

PLACEMENT OF DUCTS, VENTS, AND DRAINS SHALL BE IN ACCORDANCE WITH SSHB DIVISION II ARTICLES 10.4.1 AND 10.4.1.1.

3.02 PRESTRESSING STEEL

PLACEMENT OF PRESTRESSING STEEL SHALL BE IN ACCORDANCE WITH SSHB DIVISION II ARTICLE 10.4.2.2.

3.03 ANCHORAGE HARDWARE

PLACEMENT OF ANCHORAGE HARDWARE SHALL BE IN ACCORDANCE WITH SSHB DIVISION II ARTICLE 10.4.3. ANCHORAGES SHALL BE INSTALLED PERPENDICULAR TO THE TENDON AXIS.

DUCTS SHALL BE TIED TO SUPPORTS OR CHAIRS AT A MAXIMUM OF 4'-0" ON CENTER, TO HOLD THEM IN TRUE POSITION DURING CONCRETE PLACEMENT. THE DUCTS SHALL BE PLACED WITH A VERTICAL AND HORIZONTAL TOLERANCE OF ±1/2".

4.00 POST-TENSIONING

4.01 GENERAL REQUIREMENTS

GENERAL REQUIREMENTS FOR POST-TENSIONING SHALL BE IN ACCORDANCE WITH SSHB DIVISION II ARTICLE 10.10.1.

4.02 CONCRETE REQUIREMENTS

A. THE COMPRESSIVE STRENGTH OF CONCRETE AT TRANSFER OF PRESTRESSING STEEL SHALL BE A MINIMUM OF 4000 PSI, UNLESS APPROVED OTHERWISE BY THE PROJECT ENGINEER.

B. REFER TO SSHB DIVISION II ARTICLE 10.10.1.1 FOR ADDITIONAL REQUIREMENTS.

C. ALLOWABLE CONCRETE STRESSES SHALL BE IN ACCORDANCE WITH SSHB DIVISION I ARTICLE 9.15.2, EXCEPT THAT NO TENSILE STRESS IS ALLOWED.

4.03 PRESTRESSING EQUIPMENT

A. REFER TO SSHB DIVISION II ARTICLE 10.10.1.2. FOR PRESTRESSING EQUIPMENT REQUIREMENTS.

B. ADDITIONALLY, ALL JACKS, GAUGES, LOAD CELLS, ETC., SHALL HAVE BEEN CALIBRATED WITHIN THREE (3) MONTHS OF THEIR USE ON THE PROJECT.
C. IN NO CASE SHALL A JACK AND GAUGE (OR LOAD CELL) COMBINATION BE USED WHICH HAVE NOT BEEN CALIBRATED TO EACH OTHER.

4.04 SEQUENCE OF STRESSING

THE SEQUENCE OF STRESSING SHALL BE AS SHOWN ON THE PLANS, UNLESS APPROVED OTHERWISE BY THE PROJECT ENGINEER.

4.05 MEASUREMENT OF STRESS

A. MEASUREMENTS OF STRESS AND STRESSING RECORDS SHALL BE IN ACCORDANCE WITH SSHB DIVISION II ARTICLE 10.10.1.4.

B. STRESSING TAILS FOR ALL POST-TENSIONED TENDONS SHALL NOT BE CUT OFF UNTIL ALL STRESSING RECORDS HAVE BEEN APPROVED.

4.06 POST-TENSIONING METHOD REQUIREMENTS

A. PRIOR TO POST-TENSIONING, THE CONTRACTOR SHALL DEMONSTRATE TO THE SATISFACTION OF THE PROJECT ENGINEER THAT THE PRESTRESSING STEEL IS FREE AND UNBONDED IN THE DUCT.

B. ALL TENDONS AT AN ANCHORAGE DEVICE SHALL BE STRESSED SIMULTANEOUSLY WITH A MULTI-STRAND JACK AT EACH END OF THE TENDON.

C. TENSIONING SHALL BE ACCOMPLISHED SO AS TO PROVIDE THE FORCES AND ELONGATIONS SPECIFIED IN SSHB DIVISION II ARTICLES 10.10.1 AND 10.10.1.4.

D. SAFETY PRECAUTIONS SHALL BE TAKEN TO PREVENT WORKERS FROM STANDING OVER OR BEHIND THE STRESSING JACKS WHEN TENDONS ARE BEING STRESSED.

NO.	REVISION	BY	DATE
	RECORD DRAWING		12/97

OHIO TURNPIKE COMMISSI

POST-TENSIONING NOTES
STATE ROUTE 88 OVER
OHIO TURNPIKE
(M.P.199.5)

DATE: FEB. 1996 | SCALE: N.T.S.

POST-TENSIONING NOTES

5.00 GROUTING

GROUTING SHALL MEET THE REQUIREMENTS OF SSHB DIVISION II ARTICLE 10.11 WHICH INCLUDES:

A.GENERAL REQUIREMENTS
B.PREPARATION OF DUCTS
C.EQUIPMENT
D.MIXING OF GROUT
E.INJECTION OF GROUT
F.TEMPERATURE CONSIDERATIONS

NO DUCTS MAY BE GROUTED UNTIL THE STRESSING RECORDS FOR ALL POST-TENSIONED TENDONS HAVE BEEN APPROVED.

STANDBY FLUSHING EQUIPMENT CAPABLE OF DEVELOPING A PUMPING PRESSURE OF 250 PSI SHALL BE PROVIDED TO FLUSH OUT ANY PARTIALLY GROUTED DUCTS.

6.00 MEASUREMENT AND PAYMENT

6.01 METHOD OF MEASUREMENT

THIS ITEM WILL BE MEASURED PER EACH POST-TENSIONED CONCRETE CROSSBEAM FURNISHED AND INSTALLED IN PLACE.

6.02 BASIS OF PAYMENT

PAYMENT WILL BE MADE PER UNIT CONTRACT PRICE BID PER EACH OF ITEM SPECIAL, POST-TENSIONED CONCRETE CROSSBEAM WHICH SHALL INCLUDE FULL COMPENSATION FOR ALL LABOR, MATERIALS, TOOLS, EQUIPMENT, TESTING, REPORTS, AND ALL INCIDENTALS.

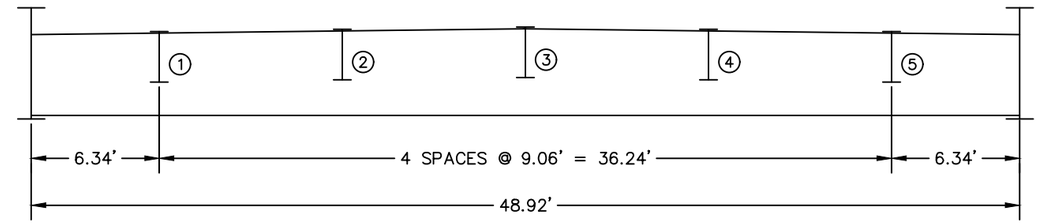

CROSSBEAM SCHEMATIC ELEVATION

SUMMARY OF DESIGN SERVICE MOMENTS (KIP-FT.)

CASE \ LOCATION	AT BEAM 1	AT BEAM 2	AT BEAM 3	AT BEAM 4	AT BEAM 5
DEAD LOAD OF SUPERSTRUCTURE PLUS CROSSBEAM	1378.0	2615.2	3073.2	2615.2	1378.0
LIVE LOAD + IMPACT (CASE I)	604.2	1430.4	1701.5	1430.4	604.2
LIVE LOAD + IMPACT (CASE II)	793.0	1389.9	1489.1	926.5	388.5

LIVE LOAD CASE I ASSUMES TWO HS20-44 TRUCKS SPACED 10 FT. APART AND CENTERED ON THE BRIDGE.

LIVE LOAD CASE II ASSUMES TWO HS20-44 TRUCKS SPACED 10 FT. APART BUT SHIFTED 6.67 FT. TOWARD BEAM 1.

NO.	REVISION	BY	DATE
	RECORD DRAWING		12/97

OHIO TURNPIKE COMMISSI

POST-TENSIONING NOTES
STATE ROUTE 88 OVER
OHIO TURNPIKE
(M.P.199.5)

DATE: FEB. 1996 | SCALE: N.T.S.
CONTRACT: 77-96-06 | SHEET 186A OF 219

DRILLED SHAFT NOTES

ITEM SPECIAL – DRILLED SHAFTS

DESCRIPTION

THIS ITEM SHALL CONSIST OF FURNISHING AND INSTALLING DRILLED SHAFTS OF THE TYPE AND SIZE SPECIFIED IN THE PLANS. THE CONTRACTOR SHALL FURNISH ALL LABOR, MATERIAL AND APPURTENANCES REQUIRED TO COMPLETE THE WORK AS SPECIFIED. THE LENGTH(S) OF THE DRILLED SHAFTS SHOWN IN THESE PLANS HAS BEEN ESTIMATED FROM AVAILABLE SUBSURFACE INFORMATION. THE CONTRACTOR IS EXPECTED TO FURNISH THE PROPOSED DRILLED SHAFTS AS PER THESE PLAN REQUIREMENTS, WITH THE UNDERSTANDING THAT THE ACTUAL LENGTH REQUIRED BASED ON CONDITIONS ENCOUNTERED DURING CONSTRUCTION MAY DIFFER FROM THE ESTIMATED LENGTH SHOWN IN THE PLANS.

THE LIMITS OF EACH DRILLED SHAFT SHALL BE DEFINED AT THE TOP BY THE PLAN ELEVATION AND AT THE BOTTOM BY THE ELEVATION OF THE BOTTOM OF THE BEDROCK SOCKET AS APPROVED BY THE ENGINEER.

A CASING MAY BE NECESSARY FOR THE CONSTRUCTION OF EACH PIER DRILLED SHAFT. PIER DRILLED SHAFT CASINGS MAY BE REMOVED PROVIDED ALL PLAN REQUIREMENTS ARE SATISFIED.

CONTRACTOR QUALIFICATION

THE CONTRACTOR SHALL SUBMIT INFORMATION TO THE OHIO TURNPIKE COMMISSION TO DOCUMENT THAT HIS PERSONNEL IS EXPERIENCED IN THE CONSTRUCTION OF DRILLED SHAFTS OF THE TYPE AND SIZE SPECIFIED ON THE PLANS. THIS INFORMATION SHALL BE SUBMITTED AT THE PRECONSTRUCTION CONFERENCE. THE CONTRACTOR IS REQUESTED TO INFORM THE CHIEF ENGINEER 48 HOURS BEFORE DATES WHEN THE CONTRACTOR WILL BE CONSTRUCTING THE DRILLED SHAFTS.

CASING

THE CASING SHALL BE MADE OF STEEL, SHALL BE WATERTIGHT AND SHALL BE OF AMPLE STRENGTH TO WITHSTAND HANDLING STRESSES AND EXTERNAL SUBSURFACE PRESSURES. THE CASING SHALL BE SEATED INTO THE BEDROCK, THUS ATTEMPTING TO SEAL OUT INCOMING WATER. THE CASING LENGTH SHALL BE AS NECESSARY TO CONSTRUCT EACH DRILLED SHAFT. THE DIAMETER OF THE CASING SHALL BE NO LESS THAN THE DIAMETER OF THE DRILLED SHAFT BEING CONSTRUCTED.

THE DIAMETER OF THE FURNISHED CASING(S) SHALL BE LARGE ENOUGH TO ALLOW THE CONSTRUCTION OF A BEDROCK SOCKET WITH DIAMETER EQUAL TO OR GREATER THAN THE PLAN DIAMETER.

TEMPORARY CASING

ALL SUBSURFACE CASINGS SHALL BE CONSIDERED TEMPORARY UNLESS THE CASING IS REQUIRED TO BE LEFT IN PLACE. THE CONTRACTOR MAY REMOVE ANY CASING CONSIDERED TEMPORARY. IF THE CASING IS TO BE REMOVED IT SHALL BE REMOVED WHILE THE CONCRETE IS STILL IN A PLASTIC STATE (BEFORE THE CONCRETE ATTAINS INITIAL SET). DURING REMOVAL OF THE CASING, THE LEVEL OF FRESH CONCRETE IN THE CASING SHALL MAINTAIN A 5 FOOT MINIMUM CLEARANCE ABOVE THE BOTTOM OF THE CASING. AS THE CASING IS WITHDRAWN CARE SHALL BE TAKEN TO MAINTAIN AN ADEQUATE LEVEL OF CONCRETE WITHIN THE CASING SO THAT FLUID TRAPPED BEHIND THE CASING IS DISPLACED UPWARD AND DISCHARGED AT THE GROUND SURFACE WITHOUT CONTAMINATING OR DISPLACING THE SHAFT CONCRETE.

EXCAVATION

WHEN OBJECTS SUCH AS LARGE BOULDERS ARE ENCOUNTERED, THEY SHALL BE REMOVED. BLASTING WILL NOT BE ALLOWED. THE DRILLED SHAFTS SHALL PENETRATE INTO BEDROCK TO A DEPTH THAT PROVIDES A BEDROCK SOCKET LENGTH THAT IS NOT LESS THAN THE BEDROCK SOCKET SHOWN IN THE PLANS. WHEN A CASING WHICH EXTENDS DOWN TO BEDROCK IS USED, THE BEDROCK SOCKET SHALL BE MEASURED FROM THE BOTTOM OF THE CASING TO THE BOTTOM OF THE DRILLED BEDROCK EXCAVATION. WHEN THE ENGINEER IS ASSURED THAT A PORTION OF THE METAL CASING IS EMBEDDED IN BEDROCK, UPON THE ENGINEER'S CONCURRENCE, THE EMBEDDED DISTANCE MAY BE INCLUDED AS PART OF THE BEDROCK SOCKET.

DEWATERING

THE CONTRACTOR SHALL BE RESPONSIBLE FOR CONTROLLING ANY INCOMING WATER TO THE EXTENT THAT THE SHAFT EXCAVATION IS MAINTAINED DRY ENOUGH FOR PERFORMANCE OF THE REQUIRED INSPECTION OPERATION. THE PREFERRED METHOD OF CONSTRUCTION IS TO PLACE THE CONCRETE IN A CLEAN, DRY EXCAVATION. THE CONTRACTOR IS EXPECTED TO MAKE A REASONABLE ATTEMPT TO SEAL WATER OUT OF THE DRILLED SHAFT EXCAVATION.

BOTTOM CLEAN OUT

THE BOTTOM OF THE DRILLED SHAFT EXCAVATION SHALL BE AS CLEAN AS PRACTICABLE (NO MORE THAN ONE INCH OF LOOSE MATERIAL ON THE BOTTOM). PRIOR TO CONCRETE PLACEMENT, DRILLING SPOILS THAT ADHERE TO THE VERTICAL SIDES OF THE BEDROCK SOCKETS ARE TO BE REMOVED.

APPROVAL BEFORE CONCRETE PLACEMENT

THE CONTRACTOR SHALL SUBMIT TO THE PROJECT ENGINEER FOR APPROVAL A WRITTEN PLAN OF STEPS AND PROCEDURES HE PROPOSES TO FOLLOW WHEN PLACING THE CONCRETE AND MONITORING THE CONCRETE PLACEMENT. CONCRETE SHALL NOT BE PLACED IN ANY DRILLED SHAFT EXCAVATION WITHOUT PRIOR APPROVAL FROM THE ENGINEER. THE DRILLED SHAFT EXCAVATION SHALL BE INSPECTED IMMEDIATELY BEFORE THE CONCRETE IS PLACED. A LIGHT POWERFUL ENOUGH TO THOROUGHLY INSPECT THE SIDES, BOTTOM AND REINFORCING STEEL CAGE OF THE DRILLED SHAFT IS REQUIRED.

CONCRETE PLACEMENT

THE CONCRETE FOR THE DRILLED SHAFT SHALL BE PLACED AS PER ITEM SP511 EXCEPT AS MODIFIED BY THE PLANS. IF THE DRILLED SHAFT HAS A BEDROCK SOCKET, THE CONCRETE FOR THE BEDROCK SOCKET SHALL BE PLACED AGAINST THE IN-SITU BEDROCK. THE CONCRETE FOR THE DRILLED SHAFT SHALL BE PLACED PROMPTLY AFTER THE FINAL INSPECTION OF THE SHAFT. IF PRACTICABLE, THE CONCRETE SHALL BE PLACED IN A CLEAN DRY EXCAVATION, HOWEVER, NO MORE THAN 2 INCHES OF STANDING WATER WILL BE PERMITTED. THE DRY CONSTRUCTION METHOD CAN ONLY BE USED WHEN LESS THAN 12 INCHES OF WATER ACCUMULATES ABOVE THE BASE OF THE HOLE DURING A ONE HOUR PERIOD WHEN NO PUMPING IS PERMITTED. CARE SHALL BE TAKEN TO ENSURE THAT CONCRETE IS NOT BEING PLACED IN MOVING WATER. THE CONCRETE MAY BE PLACED IN A DRY DRILLED SHAFT EXCAVATION BY THE FREE FALL METHOD PROVIDED THE CONCRETE FALLS TO ITS FINAL POSITION THROUGH AIR WITHOUT STRIKING THE SIDES OF THE HOLE, THE REINFORCING STEEL CAGE OR ANY OTHER OBSTRUCTION. THE FREE FALL METHOD ALLOWS THE CONCRETE TO BE DROPPED FROM THE TOP THROUGH A CENTERING CHUTE TO THE CONCRETE'S FINAL POSITION. USE FREE FALL PLACEMENT WITH A 25 FOOT MAXIMUM HEIGHT OF FREE FALL. SUPPORT THE DROP CHUTE SO THAT THE MAXIMUM HEIGHT OF FREE FALL OF THE CONCRETE MEASURED FROM THE BOTTOM OF THE CHUTE IS 25 FEET.

IF THE ENGINEER DETERMINES THAT DEWATERING IS NOT PRACTICABLE THE ENGINEER SHALL REQUIRE THAT THE CONCRETE BE PLACED UNDER WATER BY MEANS OF A CONCRETE PUMP. PAYMENT FOR PUMPING THE CONCRETE WILL BE MADE UNDER ITEM SPECIAL "CONCRETE, MISC: CONCRETE PUMPING".

TOLERANCES

THE CONTRACTOR SHALL LOCATE AND CONSTRUCT THE TOP CENTER OF THE PIER DRILLED SHAFTS WITHIN A TWO-INCH RADIUS OF THE POSITION INDICATED BY THE PLANS. THE SHAFTS ARE TO BE INSTALLED VERTICALLY AND MUST BE WITHIN 1.0 PERCENT OF PLUMB FOR THE TOTAL LENGTH OF THE DRILLED SHAFT.

CONCRETE

CONCRETE FOR ALL DRILLED SHAFTS SHALL BE CLASS S CONCRETE AND SHALL BE IN ACCORDANCE WITH ITEM SP511 EXCEPT AS MODIFIED AND SUPPLEMENTED HEREIN. THE REQUIRED SLUMP IS SIX (6) INCHES, PLUS OR MINUS ONE (1) INCH. THE MAXIMUM WATER TO CEMENT RATIO SHALL BE 0.50. IF CONCRETE IS PLACED UNDER WATER, THE REQUIREMENTS OF ADDING 10 PERCENT MORE CEMENT TO THE CONCRETE MIX SHALL BE WAIVED. THE MAXIMUM COARSE AGGREGATE SIZE SHALL BE NO. 8. THE TOP 3 TO 5 FEET OF CONCRETE IN THE DRILLED SHAFTS ARE REQUIRED TO BE VIBRATED. ONLY A MINIMAL VIBRATORY EFFORT IS NECESSARY. SPECIAL CARE SHALL BE TAKEN NOT TO OVER-VIBRATE THE DRILLED SHAFT CONCRETE. NOTE: IF THE CASING IS REMOVED USING A VIBRATORY HAMMER, NO OTHER VIBRATORY EFFORT IS NEEDED.

IF THE CASINGS FOR THE DRILLED SHAFTS ARE TO BE WITHDRAWN, THE CONCRETE SHALL NOT BE VIBRATED UNTIL THE CASING IS COMPLETELY REMOVED AND THE SHAFT TOP IS FORMED TO THE PLAN CROSS-SECTION. CARE SHALL BE TAKEN WHEN REMOVING THE CASING SO THAT THE REINFORCING STEEL CAGE IS NOT DEFORMED BY THE FORCE OF THE DOWNWARD FLOWING CONCRETE. THE CONTRACTOR SHALL FURNISH A PRECONSTRUCTED TOP FORM FOR USE IN ACCURATELY CONFINING THE CONCRETE AT THE TOP OF THE DRILLED SHAFT WHEN THE CASING IS REMOVED. THE TOP FORM SHALL BE NOT LESS THAN THREE FEET LONG.

REINFORCING STEEL

REINFORCING STEEL MAY BE UNCOATED BUT SHALL MEET THE REQUIREMENTS OF ITEM 509. THE REINFORCING STEEL SHALL BE GRADE 60. THE SPIRAL REINFORCING STEEL MAY BE PLAIN BARS ASTM A82 OR A615. THE REINFORCING STEEL CAGE SHALL BE COMPLETELY ASSEMBLED PRIOR TO PLACEMENT AND THE LENGTH SHALL BE AS NECESSARY TO CONSTRUCT EACH DRILLED SHAFT. SEE PLAN SHEETS FOR DETAILS OF REINFORCING STEEL. NOTE THAT THE LENGTHS PROVIDED IN THE REINFORCING STEEL LIST ARE ESTIMATED LENGTHS. THE REINFORCING STEEL SHALL BE PLACED AT PLAN LOCATION.

SPACERS

CONCRETE SPACERS OR OTHER APPROVED NONCORROSIVE SPACING DEVICES SHALL BE USED AT SUFFICIENT INTERVALS (NEAR THE BOTTOM AND AT INTERVALS NOT EXCEEDING 10 FEET) TO INSURE CONCENTRIC SPACING FOR THE ENTIRE CAGE LENGTH. SPACERS SHALL BE CONSTRUCTED OF APPROVED MATERIAL EQUAL IN QUALITY AND DURABILITY TO THE CONCRETE SPECIFIED FOR THE SHAFT. THE SPACERS SHALL HAVE ADEQUATE DIMENSIONS TO INSURE A MINIMUM 3 INCH ANNULAR SPACE BETWEEN THE OUTSIDE OF THE REINFORCING CAGE AND THE SIDE OF THE EXCAVATED HOLE. CYLINDRICAL CONCRETE FEET (BOTTOM SUPPORTS) SHALL BE PROVIDED TO INSURE THAT THE BOTTOM OF THE CAGE IS MAINTAINED THE PROPER DISTANCE ABOVE THE BASE.

INSPECTION

AN INSPECTION RECORD CHART HAS BEEN INCLUDED WITH THE PLANS ON SHEET 188 OF 219 AND SHOULD BE COMPLETED BY THE ENGINEER. MEASUREMENTS SHOULD BE OBTAINED PRIOR TO PLACING CONCRETE. THE CONTRACTOR SHOULD PROVIDE ALL NECESSARY EQUIPMENT NEEDED TO OBTAIN MEASUREMENTS FOR COMPLETING THE CHART. THE CONTRACTOR SHALL ASSIST THE ENGINEER IN OBTAINING THESE MEASUREMENTS. WHEN THE INSPECTION RECORD CHART IS COMPLETED, THE PROJECT ENGINEER SHOULD SUBMIT A COPY TO THE OHIO TURNPIKE COMMISSION; ATTENTION: CHIEF ENGINEER.

METHOD OF MEASUREMENT

THE TOTAL PAY LENGTH OF EACH DRILLED SHAFT SHALL BE THE COMPLETED AND ACCEPTED LENGTH MEASURED ALONG THE AXIS OF THE DRILLED SHAFT FROM THE BOTTOM OF THE BEDROCK SOCKET TO THE PROPOSED TOP ELEVATION, AS PER PLAN. THE REINFORCING STEEL THAT PROJECTS FROM THE DRILLED SHAFT INTO THE PIER FOOTING AS SPECIFIED BY THE PLANS IS INCLUDED WITH THE DRILLED SHAFT FOR PAYMENT BUT SHALL NOT BE INCLUDED IN THE MEASURED LENGTH OF THE DRILLED SHAFT.

THE TOTAL LENGTH OF EACH DRILLED SHAFT SHALL BE DIVIDED INTO TWO SEGMENTS. THE LENGTH OF THE LOWER SEGMENT IS THE LENGTH OF THE BEDROCK SOCKET AND THE LENGTH OF THE UPPER SEGMENT IS THE LENGTH OF THE DRILLED SHAFT ABOVE THE BEDROCK SOCKET.

BASIS OF PAYMENT

PAYMENT FOR FURNISHING AND INSTALLING DRILLED SHAFTS WILL BE MADE AT THE CONTRACT UNIT PRICE PER LINEAR FOOT OF ACCEPTED SHAFT LENGTH AS PER ITEM SPECIAL – "DRILLED SHAFTS, 48" DIAMETER, ABOVE BEDROCK" AND ITEM SPECIAL – "DRILLED SHAFTS, 42" DIAMETER, INTO BEDROCK", WHICH SHALL INCLUDE ALL MATERIALS, LABOR AND EQUIPMENT NECESSARY TO COMPLETE THE ITEMS AS SPECIFIED.

DESIGN PARAMETERS

THE DESIGN LOADS TO BE SUPPORTED BY EACH DRILLED SHAFT ARE 165 TONS AT THE PIER(S), WHICH ARE ASSUMED TO BE RESISTED BY SHAFT END BEARING PRESSURE. THE ALLOWABLE END BEARING PRESSURE IS 20.0 TONS PER SQUARE FOOT.

ITEM SPECIAL – CONCRETE, MISC: CONCRETE PUMPING

DESCRIPTION

THE DRILLED SHAFT EXCAVATION SHALL BE FILLED WITH WATER TO SUCH A DEPTH THAT ALL WATER MOTION HAS CEASED. THE CONCRETE SHALL THEN BE PLACED BY MEANS OF A CONCRETE PUMP. THE CONCRETE PUMP PIPE SHALL HAVE A DIAMETER THAT IS NOT LESS THAN 4 INCHES. THE CONCRETE PUMP EQUIPMENT SHALL BE SO ARRANGED THAT NO VIBRATIONS RESULT WHICH MIGHT DAMAGE FRESH CONCRETE. PIPES CARRYING CONCRETE FROM THE PUMP TO THE SHAFT SHOULD BE ARRANGED WITH A MINIMUM NUMBER OF BENDS. THE PIPE USED TO CONVEY THE CONCRETE TO THE BOTTOM OF THE DRILLED SHAFT EXCAVATION SHALL BE ANCHORED TO THE STEEL CASING TO PREVENT THE PIPE FROM UNDULATING DURING THE INITIAL PLACEMENT OF THE CONCRETE.

THE PUMPING EQUIPMENT SHALL BE SUITABLE IN KIND AND ADEQUATE IN CAPACITY FOR THE WORK REQUIRED. THE USE OF ALUMINUM PIPE AS A CONVEYANCE FOR THE CONCRETE WILL NOT BE PERMITTED. AN ADEQUATE QUANTITY OF GROUT, MORTAR OR CONCRETE WITH COARSE AGGREGATE OMITTED SHALL BE PUMPED THROUGH THE EQUIPMENT AHEAD OF THE SPECIFICATION CONCRETE TO PROVIDE LUBRICATION TO THE PUMPING SYSTEM. THE CONCRETE USED FOR LUBRICATION SHALL NOT BE PLACED IN THE SHAFT. THE LUBRICATION PROCESS WILL NOT BE REPEATED AS LONG AS THE PUMPING OPERATIONS ARE CONTINUOUS. THE OPERATION OF THE PUMP SHALL BE SUCH THAT A CONTINUOUS STREAM OF CONCRETE WITHOUT AIR POCKETS IS PRODUCED. IN ORDER TO PREVENT THE CONTAMINATION OF THE CONCRETE PLACED INITIALLY AT THE BOTTOM OF THE SHAFT, THE OUTLET END OF THE PUMPING PIPE SHALL BE SEALED WITH A DIAPHRAGM OR PLUG THAT IS FLUSHED OUT WHEN THE HYDROSTATIC PRESSURE FROM THE COLUMN OF CONCRETE EXCEEDS THAT OF THE WATER IN THE SHAFT. THE INITIAL RATE OF CONCRETE PLACEMENT MUST BE CAREFULLY CONTROLLED SO AS NOT TO LIFT OR DISPLACE THE CAGE OF REINFORCING STEEL. THE CONVEYING SYSTEM SHALL BE WATER TIGHT AND THE OUTLET END SHALL ALWAYS REMAIN WELL BELOW THE TOP OF THE FRESHLY PLACED CONCRETE. THE PREFERRED CONCRETE PLACEMENT PROCEDURE IS TO MAINTAIN THE OUTLET END OF THE PUMPING SYSTEM AT APPROXIMATELY 10 FEET BELOW THE TOP OF THE FRESH CONCRETE. WHEN THE CONCRETE REACHES THE TOP OF THE DRILLED SHAFT COLUMN ALL LAITANCE SHALL BE REMOVED.

BASIS OF PAYMENT

PAYMENT FOR PUMPING CONCRETE WILL BE MADE AT CONTRACT UNIT PRICE PER LINEAR FOOT OF ACCEPTED SHAFT LENGTH PUMPED AS PER ITEM SPECIAL – "CONCRETE, MISC: CONCRETE PUMPING".

NO.	REVISIONS	BY	DATE
1	RECORD DRAWING	m.s.	12/97

OHIO TURNPIKE COMMISSION

DRILLED SHAFT NOTES
STATE ROUTE 88 OVER
OHIO TURNPIKE (MP 199.5)

ms consultants, inc.
YOUNGSTOWN, OHIO

DESIGNED: W.B.H.	CHECKED: W.H.	DATE: 2-2-96	
DRAWN: E.R.K.	IN CHARGE: D.F.S.	SCALE: N.T.S.	

INSPECTION RECORD FOR DRILLED SHAFTS

PROJECT NO. 0 1 C 7 7-9 6-0 6

GENERAL CONTRACTOR McCOURT CONSTRUCTION

DRILLING CONTRACTOR NATIONAL ENGINEERING

PROJECT ENGINEER MS CONSULTANTS — JAMES MARR

TYPE & MODEL OF DRILLING MACHINERY JD 792 TRACKHOE W/ DRILL RIG

MAX. CONTINUOUS TORQUE _____ FT.-LB.

CROWD (MAX. CONTINUOUS DOWNWARD FORCE) _____ LBS.

TYPE OF CONCRETE PUMP NOT USED

HOSE DIAMETER _____ INCHES

CAPACITY _____ CU. FT./MIN.

COST PER LINEAL FOOT

ABOVE THE BEDROCK SOCKET $313.14

IN BEDROCK SOCKET $417.52

TYPE OF ROCK SHALE

SUBSTRUCTURE UNIT		DATE AND TIME OF DRILLING		APPROX. ELEVATION OF TOP OF OVER-BURDEN	LENGTH OF DRILLED SHAFTS ABOVE THE BEDROCK SOCKET				OBSTRUCTIONS ENCOUNTERED			LENGTH OF DRILLED SHAFTS IN BEDROCK SOCKET			STEEL CASING			REINFORCING STEEL				CONCRETE					TOLERANCES			PLAN SHAFT DIAMETER (INCH)	CONSTRUCTED SHAFT DIAMETER (INCH)
PIER OR ABUT	SHAFT NO.	STARTED DATE / TIME	FINISHED DATE / TIME		THROUGH AIR (FEET)	THROUGH WATER (FEET)	THROUGH OVER BURDEN (FEET)	PAY LENGTH (FEET)	NUMBER	SIZE (INCH)	ELAPSED TIME FOR REMOVAL (HR.)	APPROX. ELEVATION OF TOP OF BEDROCK	ELEV. OF BOT. OF BEDROCK SOCKET	LENGTH OF BEDROCK SOCKET (FEET)	LENGTH (FEET)	CASING GAUGE	WAS CASING LEFT IN PLACE ?	VERTICAL BAR SIZE NO.	VERTICAL NO. OF REBARS	SPIRAL BAR SIZE NO.	SPIRAL PITCH (INCH)	SLUMP TEST RESULT (INCH)	CYLINDER STRENGTH f'_c (P.S.I.)	AIR TEMP. (F)	TIME NEEDED TO PLACE CONCRETE (HR.)	QUANTITY (CU.YD.)	DEVIATION FROM PLUMB N-S (INCH)	DEVIATION FROM PLUMB E-W (INCH)	DEVIATION OF COLUMN TOP CENTER FROM PLAN LOCATION HORIZONTALLY (INCH)		
PIER 2	1	6/13/96 2:30PM	6/13/96 3:30PM	1156.75				17.90	0			1140.70	1132.70	8	10	1/2"	NO	11	12	4	5		NO CYL.				0	0	0	SHAFT 48"	50"
PIER 2	1	6/14/97 7:30AM	6/14/97 12:30PM	1156.75																										SOCKET 42"	42"
PIER 2	2	6/10/96 10:00AM	6/10/96 2:30PM	1156.75				16.50	0			1140.70	1132.70	8	10	1/2"	NO	11	12	4	5	7	7-4250 28-4530 28-4880 28-4670	80°	0.35	7	0	0	0	SHAFT 48"	50"
PIER 2	2	6/11/96 9:00AM	6/11/96 11:30AM	1156.75																										SOCKET 42"	42"
PIER 2	3	6/11/96 1:15PM	6/11/96 3:15PM	1156.75				14.35	0			1142.40	1134.40	8	10	1/2"	NO	11	12	4	5		7-4180 28-5850 28-6090 28-5770	78°	0.30	7	0	0	0	SHAFT 48"	50"
PIER 2	3	6/12/96 7:30AM	6/12/96 11:30AM	1156.75																										SOCKET 42"	42"
PIER 2	4	6/18/96 10:30AM	6/18/96 2:30PM	1156.75				18.30	0			1140.40	1132.40	8	10	1/2"	NO	11	12	4	5	7	7-2900 28-4670 28-4580 28-4620	83°	0.35	7	0	0	0	SHAFT 48"	50"
PIER 2	4	6/19/96 7:30AM	6/19/96 8:30AM	1156.75																										SOCKET 42"	42"
PIER 2	5	6/20/96 7:00AM	6/20/96 11:30AM	1156.75				16.71	0			1140.04	1132.04	8	10	1/2"	NO	11	12	4	5		NO CYL.				0	0	0	48"SHAFT 42"SOCKET	50" 42"
PIER 2	6	6/20/96 11:40AM	6/20/96 3:30PM	1156.75				17.90	0			1138.85	1130.85	8	10	1/2"	NO	11	12	4	5	6	7-3260 28-4420 28-4280 28-4190 56-4640	83°	0.75	7	0	0	0	48"SHAFT 42"SOCKET	50" 42"

SUBMIT A COPY TO THE OHIO TURNPIKE COMMISSION;
ATTN: CHIEF ENGINEER

THIS SHEET IS TO BE USED ONLY FOR RECORDING "AS-BUILT" INFORMATION

PROJECT ENGINEER COMMENTS

1. LOCATION AND EXTENT OF CAVITIES
2. PROCEDURES FOR CONTROLLING WATER
   CONTRACTOR TREMIED CONCRETE INTO SHAFTS TO DISPLACE SUB-SURFACE WATER
3. WERE UNEXPECTED SUBSURFACE CONDITIONS ENCOUNTERED?
4. ANY SUGGESTIONS FOR IMPROVING THE PLANS

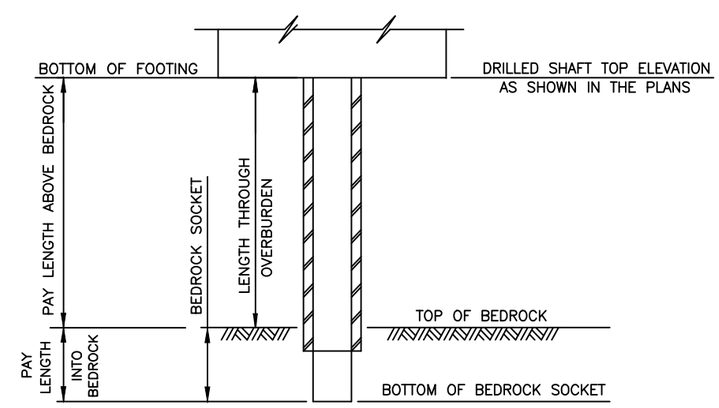

PIER

NO.	REVISIONS	BY	DATE
1	RECORD DRAWING		12/97

OHIO TURNPIKE COMMISSION

DRILLED SHAFT INSPECTION RECORD
STATE ROUTE 88 OVER
OHIO TURNPIKE (199.5)

ms consultants, inc.
YOUNGSTOWN, OHIO

DESIGNED: W.B.H.	CHECKED: W.H.	DATE: 2-2-96
DRAWN: E.R.K.	IN CHARGE: D.F.S.	SCALE: N.T.S.

CONTRACT 77-96-06 SHEET 188 OF 219